Customer Assistance

How To Use This Catalog

Watlow designs and manufactures all of the components–heaters, sensors and controls–of a complete thermal system. This catalog details our extensive heater product line, focusing on stock and standard units. It is divided in alphabetical order by product type.

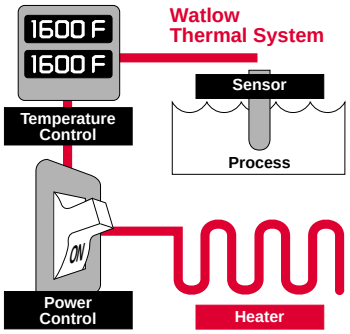

If our stock or standard units do not meet your application needs, Watlow can manufacture a heater to your special requirements.

Ask your Watlow sales engineer or authorized distributor for our controls and sensors catalogs, and our application guide. A pre-paid request card is inserted inside the back cover for your convenience.

Customer Assistance

Think Safety 4
Heater Selection Matrix 5
Manufacturing Facilities 8
Sales Offices 10

Band Heaters

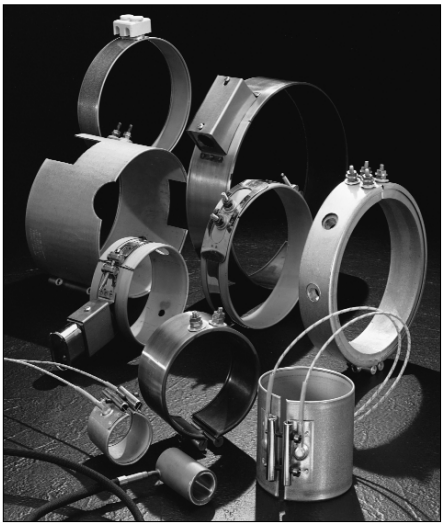

Band Heaters

MI Barrel and Nozzle 13
THINBAND® Mica Barrel and Nozzle 23
Special Mica Barrel and Nozzle 47

Cable Heaters

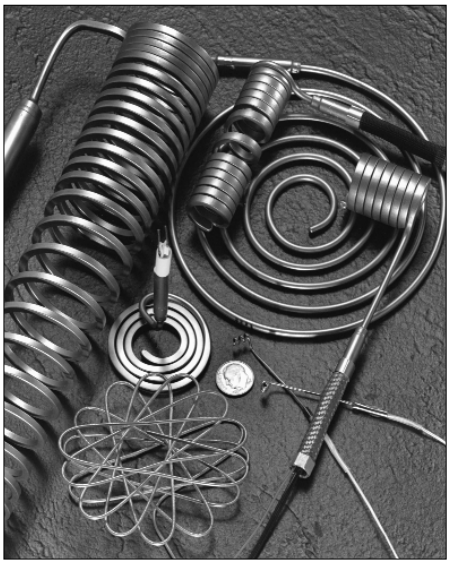

Cable Heaters

Versatile, Standard Cable 57
Coiled Nozzle 65
Mini-Cable Nozzle 67
STARFLOW Circulation 69
K-RING®. 71
Metric Mini K-RING®. 73

Cartridge Heaters

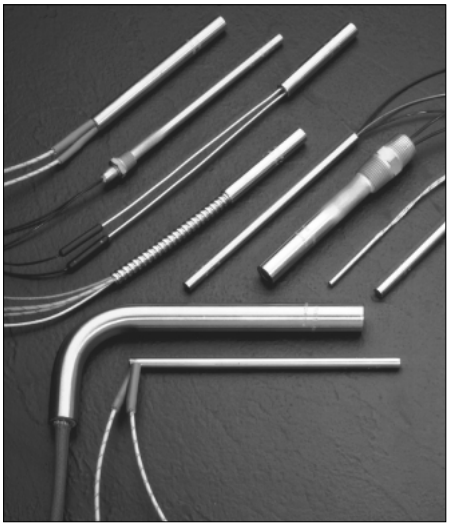

Cartridge Heaters

FIREROD® Cartridge 75
LA Modification 80
HT FIREROD Cartridge. 109
FIREROD Immersion. 111
FIREROD Bolt. 115
Metric FIREROD Cartridge 117
Metric EB Cartridge 127

Cast-In Heaters

Cast-In Heaters

The Heated Part Concept 135

Table of Contents

Ceramic Fiber Products

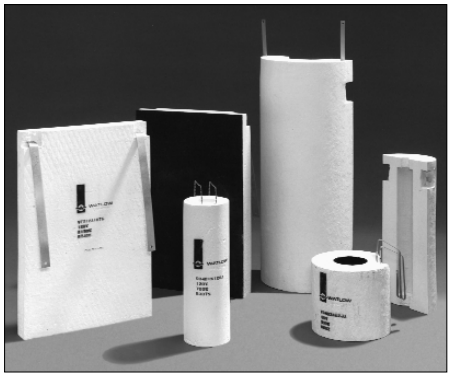

Ceramic Fiber Products
Ceramic Fiber Heaters 141
MODULE-MOUNT® 148
Molded Insulation 162

Flexible Heaters

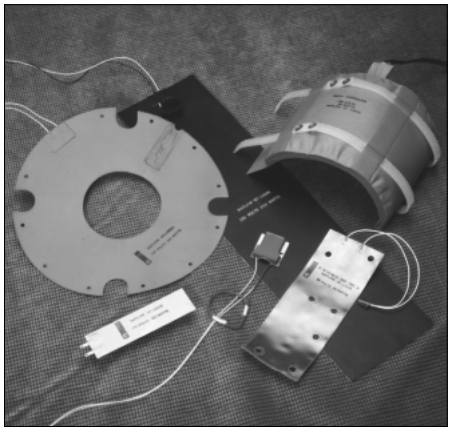

Flexible Heaters
Flexible Shapes and Geometries. 163
Silicone Rubber 169
Enclosure Heaters 177
Drum Heaters 179
PVC Conduit Heaters. 181
Composite Flexible Stock Heaters 182
Modular Gas Line Heater. . . . 183
Modular Pump Line Heater . . 187
Kapton® Material. 189
Neoprene 191
HT Foil 193

Kapton® is a registered trademark of E. I. du Pont de Nemours & Company.

Multicell Heaters

Multicell Heaters
Multicell Insertion 195
HOT TOE Multicell 201

Radiant Heaters

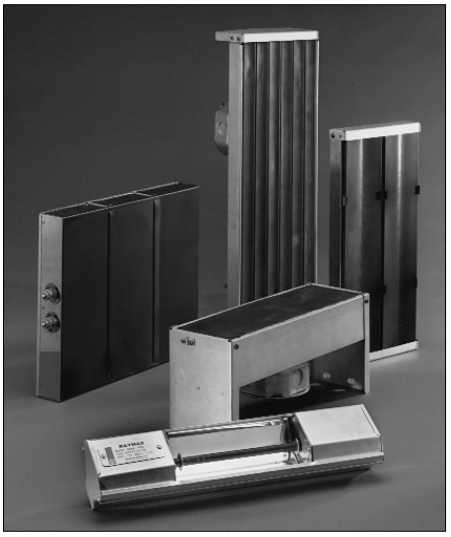

Radiant Heaters
RAYMAX® Family 203
1010. 207
1120. 209
1220/2030 211
1330. 215
1525. 217
1626. 223
Radiant Band and Strip Emitters 224
Quartz 225

Special Heaters

Special Heaters
Advanced Technology Capabilities. 227

Strip Heaters

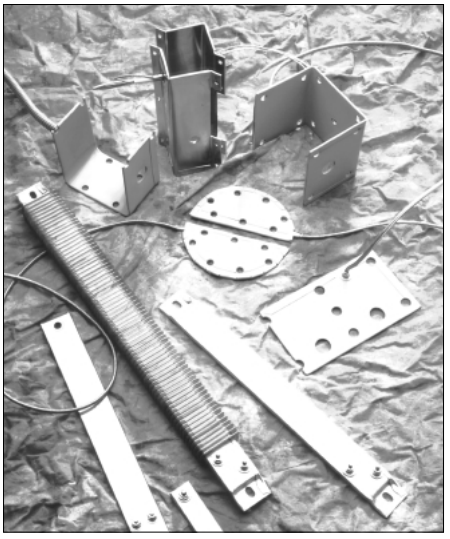

Strip Heaters
MI Strip. 229
Mica Strip 233
375 Strip 241
375 Finned Strip 247

Table of Contents

Thick Film Heaters

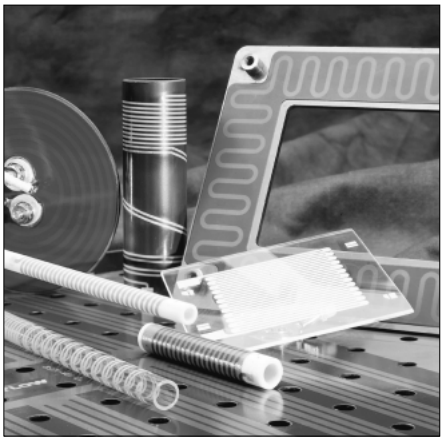

Thick Film Heaters
Thick Film Heating Technology 253
Material Comparison Guide . . . 254
Conduction Heaters 255
Nozzle Heaters 257
Ultra Pure, Thick Film Quartz Heater Modules 259

Tubular and Process Assemblies

Tubular and Process Assemblies
Elements and Assemblies 261
WATROD Heating Elements . . . 273
Tubular PLUS Program 288
Double-Ended 290
Single-Ended 295
Enclosure Heaters 296
Plastics Application 297
Semiconductor Application . . 298
FIREBAR® Heating Elements . . . 299
1" Double-Ended 313
⅝" Double-Ended 315
1" Single-Ended 316
⅝" Single-Ended 317
FINBAR Heating Elements . . . 318
Screw Plug Immersion Heaters . 321
WATROD and FIREBAR 327
WATROD with Control Assembly 337
Flange Immersion Heaters 339
WATROD and FIREBAR 345
Square Flange Immersion 363
Circulation Heaters 367
WATROD and FIREBAR 372
Booster Heaters 394
Engine Preheaters 396
Pipe Insert Heaters 399
Over-the-Side Heaters 401
"L" and "O" Shaped 401
Vertical Loop 406
Drum Heater 408
Duct Heaters 411
Replacement Elements 417
Modular Duct Heaters 419
Thermostats and Accessories 423

Reference Data 427
Terms and Conditions 435
Code Number Index 437

Responsible Engineering

Think Safety

All heating elements inherently pose burn, fire and electrical shock hazards. These can result in injury to personnel, or damage to plant and process. The user is responsible for determining heater-to-application suitability. Care should always be exercised in heater selection, installation and use.

Each shipment comes with *Installation and Maintenance Instructions*. This document is specific to the heating element or assembly. Take time to review and understand the *Installation and Maintenance Instructions*. This useful information will maximize safety, heater performance, efficiency and life.

All Watlow heaters should be installed by qualified personnel in accordance with the National Electrical Code and any applicable state or local codes.

The following recommendations apply to all Watlow heating elements and assemblies:

- Carefully read, understand and follow the *Installation and Maintenance Instructions*.
- Always disconnect electrical power prior to installing, servicing or replacing electric heating elements and/or assemblies.
- All heaters should be used with appropriate and approved temperature sensor/control device(s).
- Do not use thermostats for high-limit sheath protection. Thermostats fail in a closed circuit mode and will not cut power to the heaters. Limit control should be provided by an isolated, redundant sensor and control system of the appropriate type, design and installation.
- Electrical termination enclosures should be selected to match the application's environment and be able to withstand worse-case failures especially in hazardous locations.
- Avoid fire hazards. Electric heaters can develop temperatures that produce an auto-ignition① source. Avoid mounting heaters in atmospheres containing combustible gases, vapor or dust. Article 501 of the National Electrical Code (NEC) requires that maximum sheath temperature, when the heater is continuously energized, not exceed 80 percent of the surrounding atmosphere's auto-ignition temperature.
- Avoid contact with, and keep heaters far enough away from, combustible materials.
- Element watt density should not exceed the recommended upper limit for the substance being heated.
- Elements used in clamp-on applications should have sufficient contact with clean metal surfaces for efficient thermal conductance.

Look For These Symbols

The Caution Symbol (exclamation point) alerts you to a "CAUTION," a safety or functional hazard which could affect your equipment or its performance.

The Warning Symbol (lightening bolt) alerts you to a "WARNING," a safety hazard which could affect you and the equipment.

① Auto-ignition is the minimum temperature required for a flammable substance to ignite or cause self-sustained combustion independently of the heating element (see National Fire Prevention Agency (NFPA) 325M, Fire Hazard Properties of Flammable Liquids, Gases and Volatile Solids).

Heater Selection Matrix

Heating: Solids

Heater Type	Application Description	Sheath Materials	Typical Maximum Watt Densities W/in²	(W/cm²)	Maximum Operating Temperatures °F	(°C)	Catalog Page
Band	Clamped to cylindrical surfaces, i.e. extrusion barrels and nozzles.	Aluminized Steel mica insulation	20–55①	(3–8.5)	900	(480)	23
		Stainless Steel with mica insulation	20–55①	(3–8.5)	1000	(540)	23
		Stainless Steel with mineral insulation	30–200①	(4.6–31)	1400	(760)	13
		Zinc Steel with mica insulation	20–55①	(3–8.5)	900	(480)	23
Cable	Can be formed to heat flat or curved surfaces, or wound around the object being heated. Typical applications include platen heating and plastic injection molding nozzles.	Inconel® or Stainless Steel	30	(4.6)	1200	(650)	57
Cartridge	Inserted into a close fit hole, i.e. platens, dies and molds.	Incoloy®	up to 600②	(93)	1600	(870)	75
		Stainless Steel	up to 600②	(93)	1000	(540)	75
Cast-in	Integrating a tubular or cable heating element into a casting to form a heated part. Commonly used to reduce the total number of equipment parts.	Aluminum	60	(9.3)	700	(370)	135
Ceramic Fiber	Form the heaters into an oversized chamber to surround the object being heated. Using radiant and convection heat transfer, ceramic fiber heaters are used as ovens and furnaces.	Molded Ceramic Fiber	30	(4.6)	2200	(1205)	141
Flexible	Bonded or otherwise fastened to the part. Commonly used to heat irregular surfaces and shapes, or applications requiring distributed wattage or limited space.	Kapton®	20	(3.1)	390	(200)	189
		Mica	50	(7.8)	1100	(595)	193
		Neoprene	2	(0.3)	250	(120)	191
		Silicone Rubber	10	(1.6)	500	(260)	169
Multicell	Loosely inserted into a platen hole for radiant heating. Can also be used in any static or dynamic non-contact application as a radiant heat source. Commonly used for extreme high temperature applications, i.e. glass bending and tempering or super plastic forming and diffusion bonding of titanium and other exotic aerospace alloys.	Inconel® Incoloy® Stainless Steel	60②	(9.3)	2250	(1230)	195
Radiant	Used in any static or dynamic, non-contact application where conduction or convection heating isn't practical. Commonly used in laminating processes, thermoforming and paint drying. Note: quartz tubes supply quick heat up and cool down.	Incoloy® Tubular	40	(6.2)	1500	(815)	217
		Molded Ceramic Fiber	30	(4.6)	2000	(1095)	211
		Quartz Tube	45	(7)	1600	(870)	225
		Stainless Steel Emitter Strip	30	(4.6)	1300	(700)	224
Strip	Bolted or clamped to surface of, i.e. dies, molds, ovens. Often used for freeze and moisture protection.	Aluminized Steel with refractory insulation	50③	(7.7)	1200	(650)	241
		Stainless Steel with mica insulation	35③	(5.4)	1000	(540)	233
		Stainless Steel with mineral insulation	100③	(15.5)	1400	(760)	229
		Zinc-coated Steel with mica insulation	25③	(3.8)	900	(480)	233
Tubular	Clamped to the object to be heated, usually exterior surfaces of tanks or other process vessels or fitted into milled grooves in a platen.	Flat: Incoloy®	40	(6.2)	1400	(760)	299
		Stainless Steel	40	(6.2)	1200	(650)	299
		Round: Incoloy®	40	(6.2)	1600	(870)	273
		Stainless Steel	40	(6.2)	1200	(650)	273

①Figures shown are typical watt density ranges. Band size and thermal characteristics of the material heated will determine recommended watt density.

②Applications and heater constructions differ. Consult the application section in this catalog for more detailed application information.

③These are typical maximum watt densities. Heater clamping, environmental conditions and material being heated will determine recommended watt densities.

Kapton® is a registered trademark of E. I. du Pont de Nemours & Company. Incoloy® and Inconel® are registered trademarks of the Special Metals Corporation.

Heater Selection Matrix

Heating: Liquids/Surface Heating and Immersion

Heater Type	Application Description	Sheath Materials	Typical Maximum Watt Densities W/in² (W/cm²)	Maximum Operating Temperatures °F (°C)	Catalog Page
Band	Clamped to cylindrical surfaces, most commonly used to heat liquids flowing through pipes as freeze protection.	Aluminized Steel mica insulation	20–55① (3–8.5)	900 (480)	23
		Stainless Steel with mica insulation	20–55④ (3–8.5)	1000 (540)	23
		Stainless Steel with mineral insulation	30–200④ (4.6–31)	1400 (760)	13
		Zinc Steel with mica insulation	20–55④ (3–8.5)	900 (480)	23
Cable	Wrapped or wound around pipe or vessel containing a liquid, or used directly as an immersion heater. Often used in applications with space limitations, i.e. photo processing equipment, scientific instruments and heat tracing.	Inconel® or Stainless Steel	30 (4.6)	1200 (650)	57
Cartridge	Used as an immersion heater placed either directly in the liquid, or in a protective well. Recommeded for immersion in water or 90+ percent water soluble solutions.	Incoloy®	up to 300 (46.5) in water	212 (100) in water	111
Cast-in	Cast with passages through which liquids pass and are heated, functioning as a circulation heater or clamped around a barrel or pipe. Most often used where long life, resistance to contamination and reliability are critical.	Aluminum	60 (9.3)	700 (370)	135
Ceramic Fiber	Assemble heaters into a chamber which surrounds the tank, vessel, crucible or bath. Radiant and convection heat transfer heat the load.	Molded Ceramic Fiber	30 (4.6)	2200 (1205)	141
Flexible	Applied to the surface of a pipe or vessel containing a liquid. Well suited for curved surfaces and irregular shaped objects. Frequently used for freeze protection.	Kapton®	20 (3.1)	390 (200)	189
		Neoprene	2 (0.3)	250 (120)	191
		Silicone Rubber	10 (1.6)	500 (260)	169
Strip	Bolted or clamped to the wall of a tank or vessel. Used in food warming and other applications offering a flat mounting surface.	Aluminized Steel with refractory insulation	50③ (7.7)	1200 (650)	241
		Stainless Steel with mica insulation	30③ (4.6)	1000 (540)	233
		Stainless Steel with mineral insulation	100③ (15.5)	1400 (760)	229
		Zinc Steel with mica insulation	25③ (3.8)	900 (480)	233
Tubular	Immersed directly in the liquid being heated. Most commonly used when high kilowatts are required. Multiple style mounting adaptors, such as flanges and NPT fittings, provide excellent pressure boundaries.	Flat: Incoloy®	60 (9.3)	1400 (760)	299
		Stainless Steel	60 (9.3)	1200 (650)	299
		Round: Copper	60 (9.3)	350 (180)	273
		Incoloy®	60 (9.3)	1600 (870)	273
		Stainless Steel	60 (9.3)	1200 (650)	273
		Steel	60 (9.3)	750 (400)	273

Heating: Gases

Heater Type	Application Description	Sheath Materials	Typical Maximum Watt Densities W/in² (W/cm²)	Maximum Operating Temperatures °F (°C)	Catalog Page
Cable	Cable heaters are sinuated or wound into coils which can be inserted into a pipe or vessel to heat flowing air or gases. Cable heaters readily lend themselves to applications where space is restricted.	Inconel® or Stainless Steel	30 (4.6)	1200 (650)	57
Cartridge	Mounted in pipes or vessels through which gases pass. Can be placed in protection tubes, making access and wiring easier.	Incoloy® or Stainless Steel	400 (62)	Consult Watlow	75

CONTINUED

③These are typical maximum watt densities. Heater clamping, environmental conditions and material being heated will determine recommended watt densities.
④Per application

Heater Selection Matrix

Heating: Gases Continued

Heater Type	Application Description	Sheath Materials	Typical Maximum Watt Densities W/in²	(W/cm²)	Maximum Operating Temperatures °F	(°C)	Catalog Page
Ceramic Fiber	Used to construct chambers and furnaces through which gases are passed. Heaters function as high temperature radiant heaters surrounding transfer pipes or other special vessels.	Molded Ceramic Fiber	30	(4.6)	2200	(1205)	141
Flexible	Applied to the surface of a pipe or vessel containing gases. Well suited for curved surfaces and irregular shaped objects. Excellent for use in enclosures.	Kapton® Neoprene Silicone Rubber	5 2 5	(0.8) (0.3) (0.8)	390 250 500	(200) (120) (260)	189 191 169
Multicell	Multiple elements placed in a duct or vessel through which gases pass. Designs also available to heat pass tube externally to isolate gas from the element. Excellent for use in high temperature/high pressure applications.	Inconel® Incoloy®	60④	(9.3)	2100	(1150)	195
Strip	Generally modified with the addition of fins to increase surface area. Commonly used for air heating, drying ovens and space heaters.	Aluminized Steel with refractory insulation Stainless Steel with mica insulation Stainless Steel with mineral insulation Zinc-coated Steel with mica insulation	60⑤ 20⑤ 100③ 20⑤	(9.3) (3) (15.5) (3)	1200 1000 1400 900	(650) (540) (760) (480)	241 233 229 233
Tubular	Multiple elements mounted in an array and placed in a duct or vessel through which gases pass. Flat tubular elements can be modified with the addition of fins to increase surface area.	Flat: Incoloy® Stainless Steel Round: Incoloy® Inconel®	30 30 30 30	(4.6) (4.6) (4.6) (4.6)	1400 1200 1600 1800	(760) (650) (870) (980)	299 299 273

④ Per application
⑤ These are typical maximum watt densities. Ambient temperature and flow will determine recommended watt density.

Heating: Vacuums

Heater Type	Application Description	Sheath Materials	Typical Maximum Watt Densities W/in²	(W/cm²)	Maximum Operating Temperatures °F	(°C)	Catalog Page
Band	Clamped to cylindrical surfaces. Sealed heater construction with special lead end seal.	Stainless Steel with mineral insulation	30-100	(4.6-15.5)①	1400	(760)	23
Cable	Wound into a coil or sinuated and mounted in a vacuum vessel for radiant energy transfer.	Inconel® or Stainless Steel	30	(4.6)	1200	(650)	57
Cartridge	Mounted in a vacuum vessel for radiant energy transfer.	Incoloy® Stainless Steel	up to 35④ up to 35④	(5.4) (5.4)	1600 1000	(870) (540)	75 75
Cast-in	Construction of a vacuum vessel with cast-in heaters so that interior surface acts as a radiant heater. Possible zoned interior surface.	Aluminum	60	(9.3)	700	(370)	135
Ceramic Fiber	Surround the exterior of a vacuum vessel, using radiant energy for heat transfer.	Molded Ceramic Fiber	30	(4.6)	2200	(1205)	141
Flexible	Applied to the exterior surface of a pipe or vessel. Well suited for curved surfaces and irregular shaped objects. Note: Kapton is the only flexible heater type recommended for use in the vacuum.	Kapton® Neoprene Silicone Rubber	7 2 10	(1.1) (0.3) (1.6)	390 250 500	(200) (120) (260)	189 191 169
Multicell	Mounted in a vacuum vessel for radiant energy transfer.	Inconel® Stainless Steel⑤	60④	(9.3)	2250	(1230)	195
Radiant	Mounted in a vacuum vessel for radiant energy transfer.	Stainless Steel	30	(4.6)	1300	(700)	215
Tubular	Mounted in a vacuum vessel for radiant energy transfer.	Flat: Incoloy® Stainless Steel Round: Incoloy® Inconel®	30 30 30 30	(4.6) (4.6) (4.6) (4.6)	1400 1200 1600 1800	(760) (650) (870) (980)	299 299 299

④ Per application
⑤ Non-magnetic stainless steel available.

Customer Assistance

Watlow Manufacturing Facilities

United States Manufacturing Facilities

Anaheim, California
Watlow AOV
Manufactures:
- Silicone Rubber Heaters

1400 North Kellogg Drive
Anaheim, California 92807

Phone: 714-779-2252
FAX: 714-777-9626

Batavia, Illinois
Watlow Batavia
Manufactures:
- Heated Parts
- K-Ring Heaters

1310 Kingsland Drive
Batavia, Illinois 60510

Phone: 630-879-2696
FAX: 630-879-1101

Chesterfield, Missouri
Watlow Engineering
Manufactures:
- Capitol Equipment

636 Goddard Avenue
Chesterfield, Missouri 63005

Phone: 636-530-0288
FAX: 636-530-0395

Columbia, Missouri
Watlow Columbia
Manufactures:
- Flexible Heaters

2101 Pennsylvania Drive
Columbia, Missouri 65202

Phone: 573-474-9402
FAX: 573-474-5859

Columbia, Missouri
Watlow Ceramic Fiber Heaters
Manufactures:
- Ceramic Fiber Heaters

2407 Big Bear Court
Columbia, Missouri 65202

Phone: 573-443-8817
FAX: 573-443-8818

Hannibal, Missouri
Watlow Hannibal
Manufactures:
- Immersion Heaters
- Duct Heaters
- Circulation Heaters
- Multicell Heaters
- Thick Film Heaters
- Tubular Heaters

6 Industrial Loop Road
P.O. Box 975
Hannibal, Missouri 63401

Phone: 573-221-2816
FAX: 573-221-3723

Richmond, Illinois
Watlow Richmond
Manufactures:
- Thermocouples
- RTDs Thermistors
- Thermistors

Watlow Gordon
Manufactures:
- Insulated Wire and Cable

5710 Kenosha Street
Richmond, Illinois 60071

Phone: 815-678-2211
FAX: 815-678-3961

St. Louis, Missouri
World Headquarters and Watlow St. Louis
Manufactures:
- Cartridge Heaters
- Strip Heaters
- Radiant Heaters
- Band Heaters
- Cable Heaters

12001 Lackland Road
St. Louis, Missouri 63146

Phone: 314-878-4600
FAX: 314-878-6814

Troy, Missouri
Watlow Process Systems
Manufactures:
- Process Heating Systems
- Control Panels

97 Enterprise Way
Troy, Missouri 63379

Phone: 636-528-7676
FAX: 636-528-7091

Watsonville, California
Watlow Anafaze
Manufactures:
- Multi-loop Controllers
- High Level Software

314 Westridge Drive
Watsonville, California 95076

Phone: 831-724-3800
FAX: 831-724-0320

Winona, Minnesota
Watlow Winona
Manufactures:
- Temperature Controllers
- Control Consoles
- Custom Electronic Controllers
- Power Controllers
- Safety and Limit Controllers
- Sub-assemblies

1241 Bundy Boulevard
Winona, Minnesota 55987

Phone: 507-454-5300
FAX: 507-452-4507

Winona, Minnesota
Watlow Polymer Technologies
Manufactures:
- Polymer Heaters

1265 East Sanborn Street
Winona, Minnesota 55987

Phone: 507-457-9797
FAX: 507-457-9736

Customer Assistance

Watlow Manufacturing Facilities

Asian Manufacturing Facilities

Singapore

Watlow Asia Engineering Pte. Ltd.
Manufactures:
- Cartridge Heaters
- Temperature Controllers
- Thermocouples

16, Ayer Rajah Crescent
#06-05A/B, Singapore 139965

Phone: 65-7771266
FAX: 65-7777662

European Manufacturing Facilities

France

Watlow France, S.A.R.L.
Manufactures:
- Cartridge Heaters

Immeuble Somag
16 Rue Ampere
Cergy Pontoise Cedex, France
95307

Phone: 33-1-3073-2425
FAX: 33-1-3073-2875

Germany

Watlow GmbH
Manufactures:
- Cable Heaters
- Cartridge Heaters
- Silicone Rubber Heaters
- K-RING Heaters
- Thermocouples

Lauchwasenstr. 1
Postfach 1165
D-7521 Kronau
Germany 76709

Phone: 49-7253-94-00-0
FAX: 49-7253-94-00-44

Italy

Watlow Italy, s.r.l.
Manufactures:
- Thermocouples

Via Meucci 14
20094 Corsico
Milano, Italy 20135

Phone: 39-0-2-4588841
FAX: 39-0-2-45869954

United Kingdom

Watlow Limited
Manufactures:
- Band Heaters
- Cartridge Heaters
- Flexible Heaters
- Thermocouples

Robey Close
Linby Industrial Estate
Linby, Nottingham, England
NG15 8AA

Phone: 44-115-964-0777
FAX: 44-115-964-0071

Latin American Manufacturing Facilities

Mexico

Watlow de Mexico S.A. de C.V.
Manufactures:
- Cartridge Heaters
- Ceramic Knuckle Heaters
- Band Heaters
- Silicone Rubber Heaters

Ave. Fundición #5
Col. Parques Industriales
Queretaro, Qro., Mexico CP-76130

Phone: 011-52-42-17-6235
FAX: 011-52-42-17-6403

Customer Assistance

Sales Support

North American Sales Offices

Arizona, Phoenix

14830 North 10th Street
Phoenix, Arizona 85022

Phone: 602-708-1995
FAX: 888-579-5222

California, Los Angeles

1914 West Orangewood Avenue, Suite 101
Orange, California 92868

Phone: 714-935-2999
FAX: 714-935-2990

California, Sacramento

1698 River Oaks Circle
Fairfield, California 94533

Phone: 707-425-1155
FAX: 707-425-4455

California, San Diego

1914 Orangewood, Suite 101
Orange, California 92868

Phone: 714-935-2999
FAX: 714-935-2990

California, San Francisco

2005 De La Cruz Boulevard, Suite 142
Santa Clara, California 95050

Phone: 408-980-9355
FAX: 408-980-0239

Canada - Quebec and Atlantic Canada

1083, boul. Labelle, C.P. 68084
Blainville, Quebec, Canada J7C 4Z4

Phone: 450-433-1309
FAX: 450-433-0457

Canada - Western Canada

9912 Lougheed Hwy.
Burnaby, BC, Canada V3J 1N3

Phone: 604-444-4881
FAX: 604-444-4883

Colorado, Denver

5945 W. Sumac Avenue
Littleton, Colorado 80123

Phone: 303-798-7778
FAX: 303-798-7775

Florida, Orlando

P.O. Box 2160
Windermere, Florida 34786

Phone: 407-351-0737
FAX: 407-351-6563

Florida, Tampa/St. Petersburg

1309 West Yale Street
Orlando, Florida 32809

Phone: 813-926-3600
FAX: 813-926-3500

Georgia, Atlanta

1320 Highland Lake Drive
Lawrenceville, Georgia 30045

Phone: 770-972-4948
FAX: 770-972-5138

Illinois, Chicago

1320 Chase Street, Suite 2
Algonquin, Illinois 60102

Phone: 847-458-1500
FAX: 847-458-1515

Indiana, Indianapolis

160 Carmel Drive, Suite 204
P.O. Box 517
Carmel, Indiana 46032

Phone: 317-575-8932
FAX: 317-575-9478

Kansas, Kansas City

P.O. Box 15539
Lenexa, Kansas 66285

Phone: 913-897-3973
FAX: 913-897-4085

Louisiana, Shreveport

149 Ockley Drive
Shreveport, Louisiana 71105

Phone: 318-864-2864
FAX: 318-864-2864

Maryland/Virginia Mid Atlantic

85 Old Dublin Pike
Doylestown, Pennsylvania 18901

Phone: 215-345-8130
FAX: 215-345-0123

Michigan, Detroit

155 Romeo Road, Suite 600
Rochester, Michigan 48307

Phone: 248-651-0500
FAX: 248-651-6164

Sales Territory includes:
Ontario, Canada

Minnesota, Minneapolis

7300 West 147th, Box 14, Suite 301
Apple Valley, Minnesota 55124

Phone: 952-431-5700
FAX: 952-431-5704

Sales Territory includes:
Manitoba, Canada

Missouri, St. Louis

12001 Lackland Road
St. Louis, Missouri 63146

Phone: 636-441-5077
FAX: 636-447-8770

New England

547 Amherst Street Suite 204
Nashua, New Hampshire 03063

Phone: 603-882-1330
FAX: 603-882-1524

New York/New Jersey Mid Atlantic

85 Old Dublin Pike
Doylestown, Pennsylvania 18901

Phone: 215-345-8130
FAX: 215-345-0123

New York - Upstate

6032 Old Beattie Rd.
Lockport, New York 14095

Phone: 716-438-0454
FAX: 716-438-0082

North Carolina, Charlotte/Columbia

10915 Tara Oaks Drive
Charlotte, North Carolina 28227

Phone: 704-541-3896
FAX: 704-541-3852

North Carolina, Winston Salem/Raleigh

8425 Maeve Court
Clemmons, North Carolina 27012

Phone: 336-766-9659
FAX: 336-766-9528

Customer Assistance

Sales Support

Ohio, Cincinnati

4700 Duke Drive, Suite 125
Mason, Ohio 45040

Phone: 513-398-5500
FAX: 513-398-7575

Ohio, Cleveland

28 West Aurora Road
Northfield, Ohio 44067

Phone: 330-467-1423
FAX: 330-467-1659

Oklahoma, Tulsa

4444 East 66th Street, Suite 101
Tulsa, Oklahoma 74136

Phone: 918-496-2826
FAX: 918-494-8901

Oregon, Portland

7410 S.W. Oleson Road, PMB 145
Portland, Oregon 97223

Phone: 503-245-9037
FAX: 503-245-9039

Philadelphia, Pennsylvania Mid Atlantic

85 Old Dublin Pike
Doylestown, Pennsylvania 18901

Phone: 215-345-8130
FAX: 215-345-0123

Pennsylvania, Pittsburgh

1241 W. North Avenue
Pittsburgh, Pennsylvania 15233

Phone: 412-322-5004
FAX: 412-322-1322

Tennessee, Nashville

212 Hidden Lake Road
Hendersonville, Tennessee 37075

Phone: 615-264-6148
FAX: 615-264-5654

Texas, Austin

12343 Hymeadow Parkway, Suite 2L
Austin, Texas 78750

Phone: 512-249-1900
FAX: 512-249-0082

Texas, Dallas

4625 Eastover Drive, Suite 118
Mesquite, Texas 75149

Phone: 972-620-6030
FAX: 972-620-8620

Texas, Houston

303 Wells Fargo Drive, Suite B4
Houston, Texas 77090

Phone: 281-440-3074
FAX: 281-440-6873

Washington, Seattle

1420 N.W. Gilman Boulevard, #2571
Issaquah, Washington 98027

Phone: 425-222-4090
FAX: 425-222-5162

Wisconsin, Appleton

400 South Linwood Unit #13
Appleton, Wisconsin 54914

Phone: 920-993-2161
FAX: 920-933-2162

Asian/Australia Sales Offices

Australia

Watlow Australia Pty. Ltd.
23 Gladstone Park Drive
Tullamarine, VIC 3043

Phone: 61-39-335-6449
FAX: 61-39-330-3566

Sales Territory: Australia and New Zealand

China

Watlow China Inc.
179, Zhong Shan Xi Road
Hong Qiao Cointek Building
Floor-4, Unit P
Shanghai, China 200051

Phone: 86-21-6229-8917
FAX: 86-21-6228-4654

Sales Territory: China, including Hong Kong

Japan

Watlow Japan Ltd. (K.K.)
Azabu Embassy Heights 106
1-11-12 Akasaka
Minato-ku, Tokyo 107-0052

Phone: 81-3-5403-4688
FAX: 81-3-5575-3373

Sales Territory: Japan

Korea

Watlow Korea Co., Ltd.
3rd Floor, DuJin Building
158 SamSung-dong
Kangnam-ku
Seoul, Korea 135-090

Phone: 82-2-563-5777
FAX: 82-2-563-5779

Sales Territory: Korea

Malaysia

Watlow Malaysia Sdn Bhd
38 B Jalan Tun Dr Awang
11900 Bayan Lepas, Penang
Malaysia

Phone: 60-4-641-5977
FAX: 60-4-641-5979

Sales Territory: Malaysia

Singapore

Watlow Singapore Pte. Ltd.
Blk 55, Ayer Rajah Crescent, #3-23
Ayer Rajah Industrial Estate
Singapore 0513

Phone: 65-7775488
FAX: 65-7780323

Sales Territory: Southeast Asia

Taiwan

Watlow Taiwan
10F-1 No. 189
Chi-Shen 2nd Road
Kaohsiung, Taiwan, ROC

Phone: 886-7-261-8397
FAX: 886-7-261-8420

Sales Territory: Taiwan

Customer Assistance

Sales Support

European Sales Offices

France

Watlow France, S.A.R.L.
Immeuble Somag
16 Rue Ampere
Cergy Pontoise Cedex, France
95300

Phone: 33-1-3073-2425
FAX: 33-1-3073-2875

Sales Territory: France

Germany

Watlow GmbH
Lauchwasenstr. 1
Postfach 1165
76709 Kronau, Germany

Phone: 49-7253-94-00-0
FAX: 49-7253-94-00-44

Sales Territory: All other European countries

Italy

Watlow Italy, s. r. l.
Via Meucci 14
20094 Corsico
Milano, Italy 02135

Phone: 39-0-2-4588841
FAX: 39-0-2-45869954

Sales Territory: Italy

United Kingdom

Watlow Limited
Robey Close
Linby Industrial Estate
Linby, Nottingham, England
NG15 8AA

Phone: 44-115-964-0777
FAX: 44-115-964-0071

Sales Territory: Great Britain, Ireland

Latin American Sales Office

Mexico

Watlow de Mexico, S.A. de C.V.
Ave. Fundición #5
Col. Parques Industriales
Queretaro, Qro., Mexico CP-76130

Phone: 011-52-42-17-6235
FAX: 011-52-42-17-6403

Sales Territory: Latin America and Puerto Rico

Corporate Headquarters

Watlow
12001 Lackland Road
St. Louis, Missouri 63146

Phone: 314-878-4600
FAX: 314-878-6814

Sales Territory: All countries and Canadian provinces not specified in U.S. sales office list.

Quick Ship

- *Same day shipment on all stock heaters with post terminals or Type B leads.*

Band Heaters

MI Barrel and Nozzle

The MI Band is a high performance heater. Its performance and name are derived from Watlow's exclusive mineral insulation—a material that has much higher thermal conductivity than the mica and hard ceramic insulators used in conventional heaters.

A thin layer of the "high" thermal conductive MI material is used to electrically insulate the element wire from the inside diameter of the heater sheath. A thicker, "low" thermal conductivity layer backs up the element wire, directing the heat inward towards the part that is being heated. The result is more efficient heat transfer ... a performance solution that lowers element wire temperatures and increases heater life.

Performance Capabilities

- Heater operating temperatures to 1400°F (760°C)
- Watt densities to 230 W/in^2 (35.6 W/cm^2) available on small diameter nozzle bands
- Watt densities to 100 W/in^2 (15.5 W/cm^2) available on large diameter barrel bands

Features and Benefits

- **Operating temperatures to 1400°F (760°C)** make it possible to safely melt even the newest resins, like Peek®, Teflon®, Ultem® and Zytel®.
- **Higher watt densities than any other band** contribute to faster heat-up and through-put to increase productivity.
- **High thermal conductivity of MI** and low mass construction give almost instant response to temperature control. This performance solution eliminates thermal lag and temperature overshoot associated with ceramic knuckle heaters.

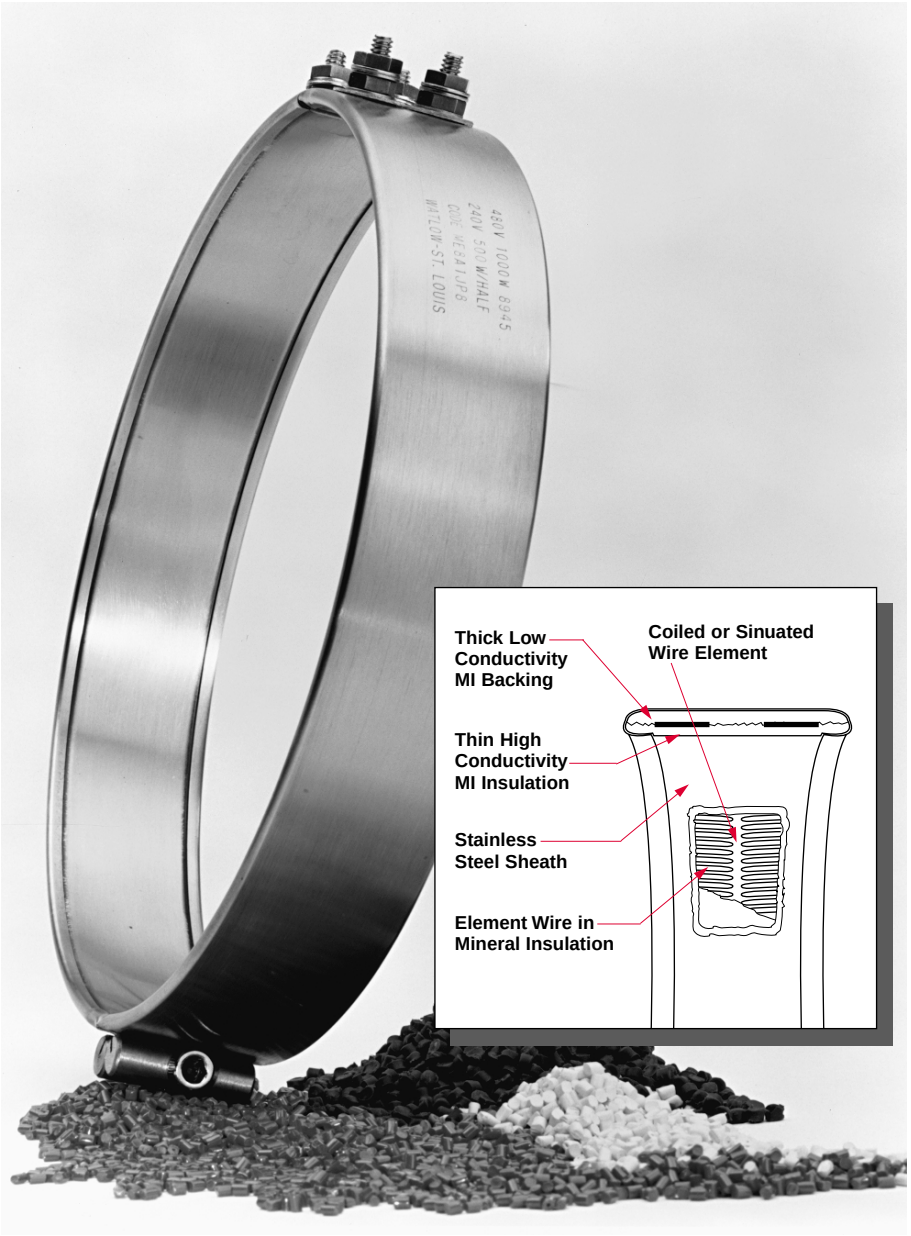

- **Stainless steel cover** as well as side fold design resist contamination by overflow of plastic or other free-flowing materials. Side folds turn to the inside diameter rather than the outside diameter.
- **Permanently attached clamp bars** eliminate cumbersome clamping straps, which makes installation easier.

Applications

- Extruders
- Blown film dies
- Injection molding machines
- Other cylinder heating applications

Teflon® and Zytel® are registered trademarks of E.I. du Pont de Nemours & Company.

Ultem® is a registered trademark of General Electric Corporation.

Peek® is a registered trademark of Greene, Tweed & Company.

Band Heaters

MI Barrel and Nozzle

Applications and Technical Data

The *Physical Limitations of Variations* table shows you the availability of widths, inside diameters and terminations for Watlow's MI Band heaters. To make sure the available terminations will meet your application needs, refer to the illustrations of termination types on **page17**.

If you need to exceed limitations shown, contact your Watlow sales engineer or authorized distributor.

Physical Limitations of Variations

Widths inches (mm)	I.D. Available—inches (mm)																Available Terminations
	1 pc. Construction						Expandable						2 pc. Construction				
	Minimum inches (mm)			Maximum inches (mm)			Minimum inches (mm)			Maximum inches (mm)			Minimum inches (mm)			Maximum inches (mm)	
1	(25.4)	1	(25.4)	–	14	(355.6)	3	(76.2)	–	14	(355.6)	3	(76.2)	–	14	(255.6)	All
1⅜	(34.9)	1	(25.4)	–	3	(76.2)	3	(76.2)	–	6	(152.4)	3	(76.2)	–	6	(152.4)	All
1½	(38.1)	1	(25.4)	–	14	(355.6)	3	(76.2)	–	14	(355.6)	3	(76.2)	–	28	(711.2)	All
2	(50.8)	1¼	(31.8)	–	14	(355.6)	3	(76.2)	–	14	(355.6)	3	(76.2)	–	28	(711.2)	All
2½	(63.5)	1¼	(31.8)	–	14	(355.6)	3	(76.2)	–	14	(355.6)	3	(76.2)	–	28	(711.2)	All
3	(76.2)	1¼	(31.8)	–	14	(355.6)	3	(76.2)	–	14	(355.6)	3	(76.2)	–	28	(711.2)	All
3½	(88.9)	1¾	(44.5)	–	14	(355.6)	3	(76.2)	–	14	(355.6)	3	(76.2)	–	28	(711.2)	All - Except 90° "B" Leads
4	(101.6)	2	(50.8)	–	14	(355.6)	3	(76.2)	–	14	(355.6)	3	(76.2)	–	28	(711.2)	All
4½	(114.3)	2¼	(57.2)	–	14	(355.6)	3	(76.2)	–	14	(355.6)	3	(76.2)	–	28	(711.2)	All
5	(127.0)	2½	(63.5)	–	14	(355.6)	3	(76.2)	–	14	(355.6)	4	(101.6)	–	28	(711.2)	All - Except 90° "B" Leads
5½	(139.7)	2¾	(69.85)	–	14	(355.6)	3	(76.2)	–	14	(355.6)	4	(101.6)	–	28	(711.2)	Post Terminals, SLE
6	(152.4)	3	(76.2)	–	14	(355.6)	3	(76.2)	–	14	(355.6)	4	(101.6)	–	28	(711.2)	All
7	(177.8)	N/A			N/A		4	(101.6)	–	14	(355.6)	N/A			N/A		Post Terminals

General Limitations:

- Maximum width of 1 inch (25 mm) diameter heater is 1.5 inches wide (38 mm).
- Maximum heater width = 2x heater diameter
- Minimum I.D. for Type B, C, E and H leads = 1 inch (25 mm)
- Minimum I.D. for Type B—90 Degree leads = 1⅛ inches (28 mm)
- Maximum lead amps: 8.5A per pair
- Maximum amps (post terminals): 30A per pair

Standard Gaps:

- ≤ 3 inches = ⅛ inch nominal
- 3 inches ≤ 6 inches = ¼ inch nominal ±⅛ inch
- 6 inches ≤ 14 inches = ⅜ inch nominal ±⅛ inch
- > 14 inches = ½ inch nominal ±¼ inch

Band Heaters

MI Barrel and Nozzle

Applications and Technical Data

Calculating Watt Density

Watt density is the amount of wattage per square inch of heated area. To determine watt density, divide the total wattage by the heated area.

$$\textbf{Watt Density} = \frac{\textbf{Total Watts}}{\textbf{Heated Area}}$$

To apply this equation we must define the term "heated area."

Heated area is the total contact surface of the heater less areas of no heat that are found around terminals, mounting holes, etc.

Heated Area =
Total Contact Area - No-Heat Area

To calculate the heated area:

1. Locate the **no-heat factor** from the chart below that corresponds to the type of heater being considered.
2. To use the formula below, insert the no heat factors, diameter and width (in inches).

Heated Area =
(3.14 x Diameter - No-Heat Factor) x Width

Type	Factor inch
1 pc. lead unit Type B, C, H, E or 90°B	1.37
1 pc. post terminal	1.60
2 pc. expandable post term	3.18
2 pc. expandable lead unit	3.00

Maximum Allowable Watt Density

The following derating factors apply to the *Maximum Allowable Watt Density* chart, which are shown in both inch base and metric for your convenience. Please review these factors and the chart to determine the correct watt density curve for your application.

Derating Factors:

- For units over two inches (51 mm) in width, multiply watt density by 0.8.
- In applications where unusual operating conditions are present, such as irregular mounting surfaces, contact the Watlow factory in St. Louis, Missouri, for watt density limitations.
- For two-piece units used in vertical applications, refer to *Clamping Matrix Application Guide,* **page 16**.
- For applications where insulating blankets are used, multiply W/in² (W/cm²) by 0.75.

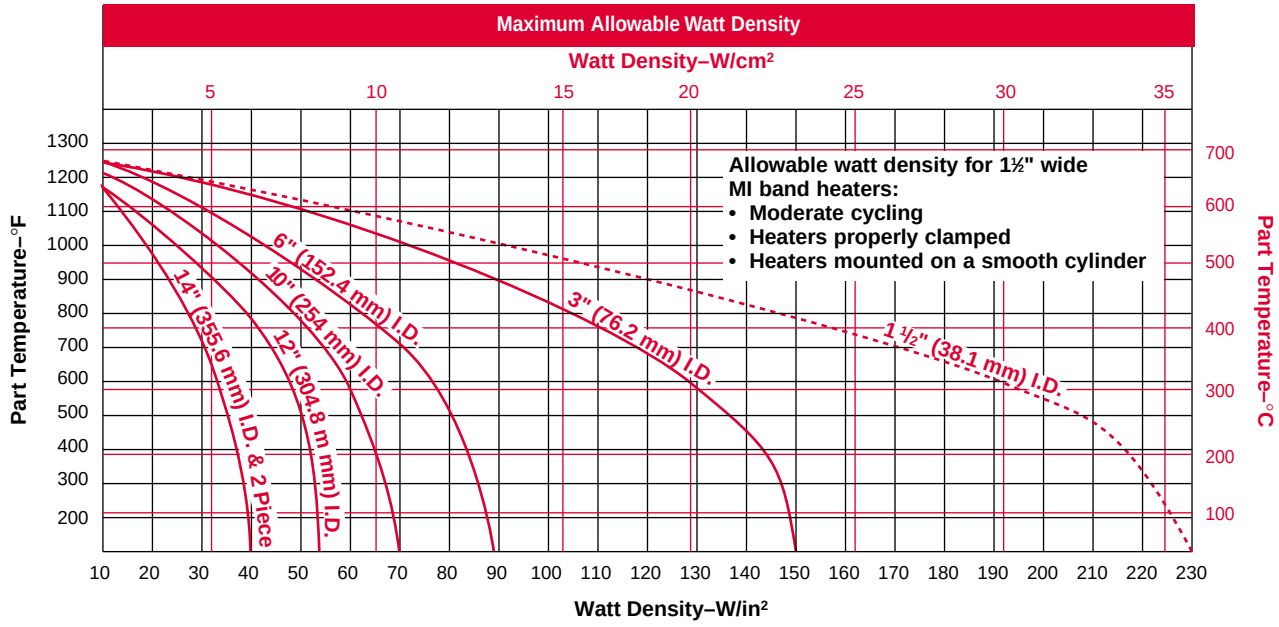

Band Heaters

MI Barrel and Nozzle

Applications and Technical Data

- Review *Watt Density* chart on **page 15** to ensure that the application does not exceed the maximum watt density at operating temperature after applying derating factors.
- Locate clamping guideline for unit diameter, width and watt density.
- Description of guideline letters are at lower left of page.
- **Note:** Upward arrows are up to and not including specified watt density. Downward arrows are greater than or equal to specified watt density.

MI Band Clamping Matrix Application Guide

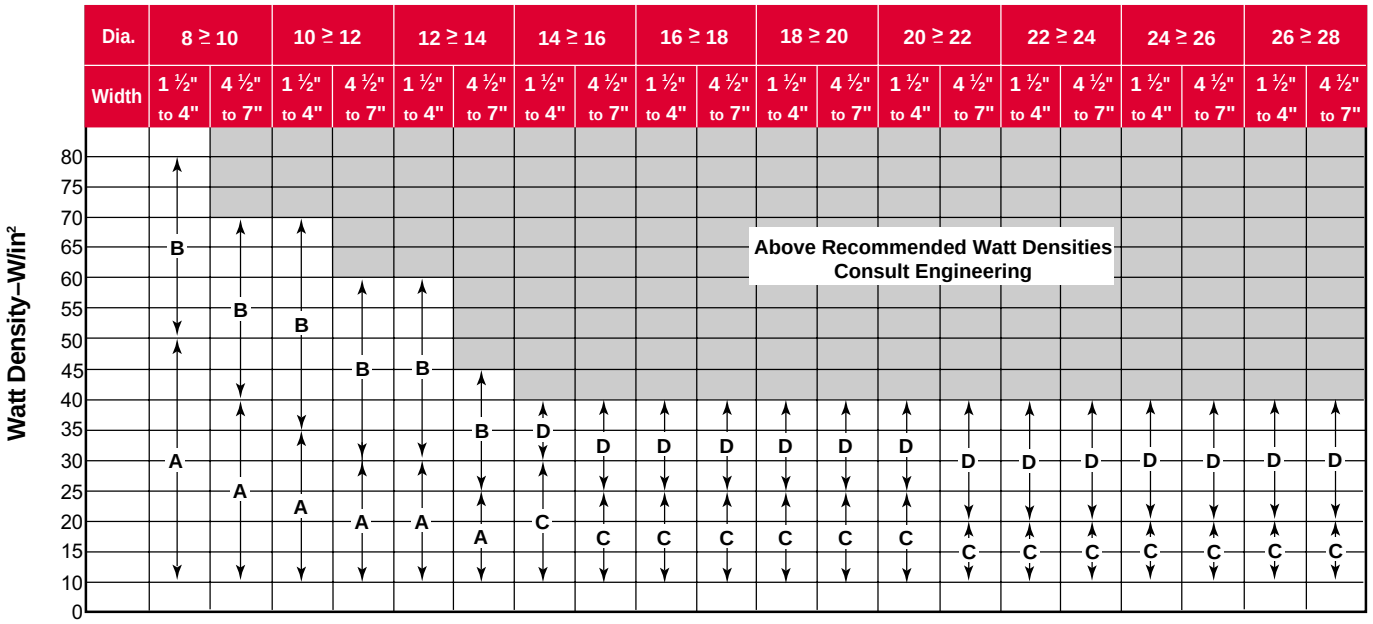

A	=	Standard clamping, expandable or one piece construction
B	=	Spring clamps, expandable or one piece construction
C	=	Spring clamps, at one gap, welded barrel nuts at other gap
D	=	Spring clamps, spring clamps at both gaps

Width	Clamp Points at Each Gap
≥ 5" (127 mm)	3
≥ 3" (76.2 mm)	2
< 3" (76.2 mm)	1

Band Heaters

MI Barrel and Nozzle

Termination Variations

Leads Type B, Type B—90 Degree Rotation,Type B—180 Degree Rotation or Type C: Two fiberglass-insulated lead wires exit in a single metal braid for good abrasion protection, lead flexibility and wiring convenience. Leads are two inches (51 mm) longer than braid. Shipped with 12 inch (305 mm) leads, unless longer length is specified. To order, specify **type** and **length.**

Type B

Stock

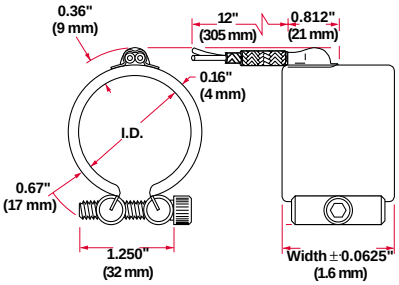

Type B—180 Degree Rotation

Stock

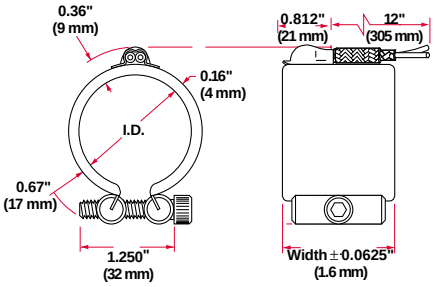

Type B—90 Degree Rotation

Non-Stock

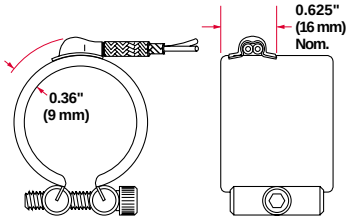

Type C

Stock

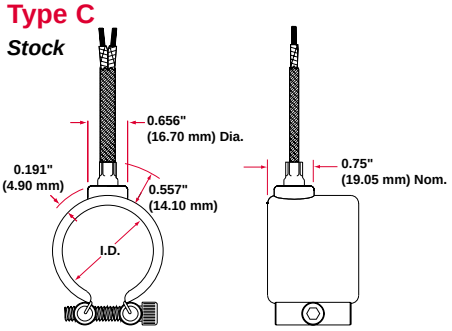

Post Terminals

Stock

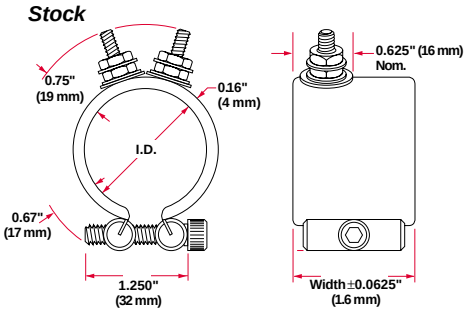

Post terminals provide optimum connections. Screw thread is 10-24. To order, specify **post terminals**.

Type K

Stock

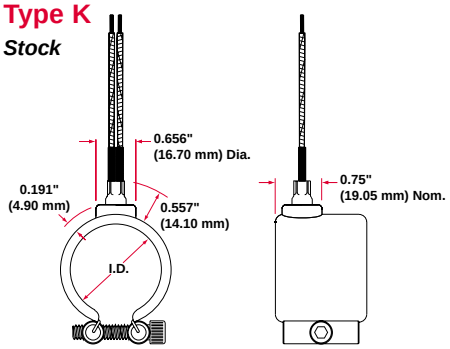

Type K: Flexible lead wires exit vertically from the heater. These leads can be bent adjacent to the heater for a quick and easy connection. To order, specify **Type K** and **length**.

Type E

Stock

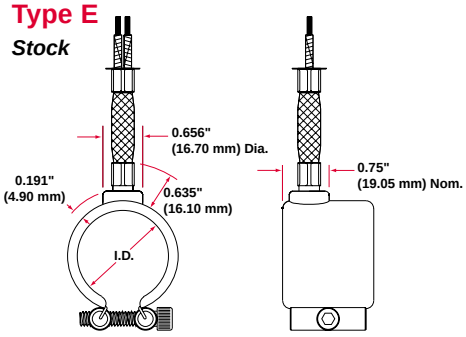

Type E: Loose metal braid encloses two fiberglass leads for good abrasion protection, lead flexibility and wiring convenience. Leads are two inches (51 mm) longer than braid. Shipped with 12 inch (305 mm) leads, unless longer length is specified. To order, specify **Type E** and **length.**

Type F

Stock

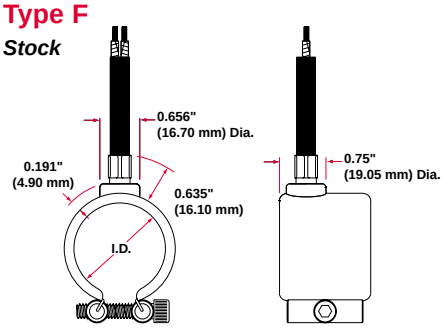

Type F: Loose fiberglass sleeving encloses two fiberglass leads for additional insulation protection where high temperature or minor abrasion is present. Leads are two inches (51 mm) longer than the sleeving. To order, specify **Type F** and **length**.

Type H

Stock

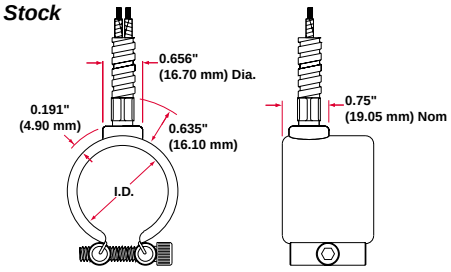

Type H: A flexible steel hose encloses the leads for maximum abrasion protection. Leads are two inches (51 mm) longer than hose. Shipped with 12 inch (305 mm) leads, unless longer length is specified. To order, specify **Type H** and **length.**

Band Heaters

MI Barrel and Nozzle

Variations

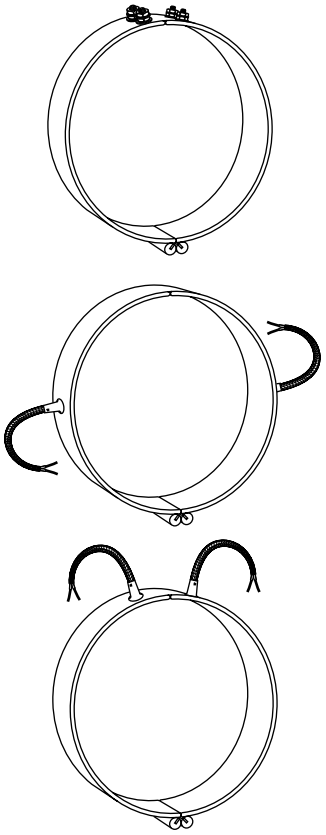

1½" (38 mm) wide and greater

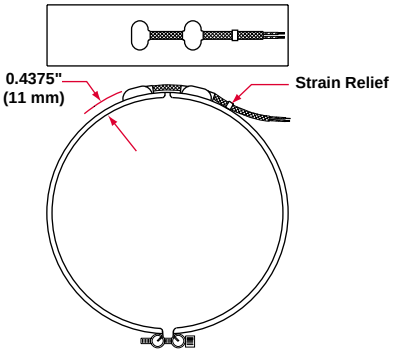

Lead Wire

Heaters rated at less than 250V~(ac) use UL® approved lead insulation for operations to 480°F (250°C) as standard. Lead insulation UL® rated for operation to 840°F (450°C) is available for high temperature applications where the leads are shrouded or enclosed with the heater. These leads are available in any of the Type B with loose braid, as well as Types E, F and H lead configurations. All heaters rated at more than 250V~(ac) use this wire. When ordering, specify **850°F (450˚C) wire.**

Thermocouple

ASTM Type J or K internal thermocouples are available on lead Type B with loose braid. The thermocouple junction, which is welded inside the lead cap or spot-welded to heater sheath, provides a signal for measuring relative heater temperature.

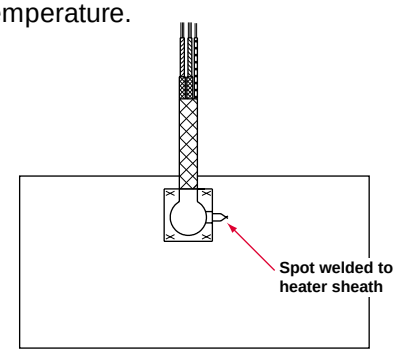

Expandable Heaters With and Without Leads

Expandable heaters are two-piece units with a common top metal that allows the heater to expand open to the full diameter of the barrel. On expandable bands, each half will be one half of the total wattage. Plus, on both expandable and two-piece bands, each half will be rated at full operating voltage, unless otherwise specified.

MI Band heaters 1½ inches (38 mm) wide or greater will have post terminals located next to the expansion joint. Leads may be located anywhere along the circumference except near the gap and at the expansion joint. Two sets of leads required.

On one inch (25 mm) wide
MI Band heaters, post terminals will be located 90 degrees from the expansion joint. Leads may be located anywhere along the circumference except near the gap and at the expansion joint. Two sets of leads required. To order, specify **expandable.**

Type SLE

Two fiberglass lead wires exit a single tightly woven metal braid at right angle on the expandable construction verses two sets of leads. Minimum diameter capabilities is four inches (100 mm). Minimum width capabilities is 1½ inches (38 mm). To order, specify **Type SLE** and **length.**

UL® is a registered trademark of Underwriter's Laboratories, Inc.

Band Heaters

MI Barrel and Nozzle

Variations

Continued

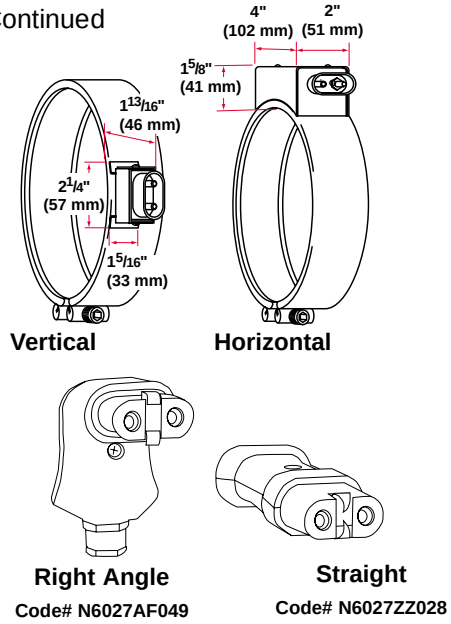

High Temperature "Quick Disconnect" European Style Plugs

They provide the simplest and safest way to apply power to band heaters. The combination of high temperature male and female quick disconnect plug assemblies eliminates all live exposed terminals and electrical wiring that can be a potential hazard to employees or machine. Maximum 15 amps at 240V~(ac), maximum volts 240. To order, specify **vertical** or **horizontal** European plug.

High Temperature "Quick Disconnect" European Style Female Adaptors

Available as an accessory item that must be used in conjunction with high temperature "quick disconnect" European style plugs.

To order, specify code number **N2027AF049** or **N6027ZZ028** and quantity.

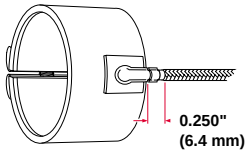

Heavy Duty Strain Relief

Heavy duty strain relief is recommended for applications where there is great stress or continued flexing of the leads. The strain relief is available on Type B, Type B—90 Degree and Type B—180 Degree leads only. To order, specify **heavy duty strain relief.**

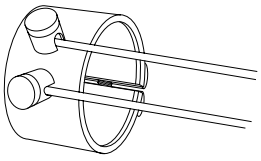

Ceramic Terminal Cover

Ceramic covers, with openings for leads, are screwed on to post terminals, providing a convenient, economical insulator. To order, specify code number **Z-4918** and **quantity.**

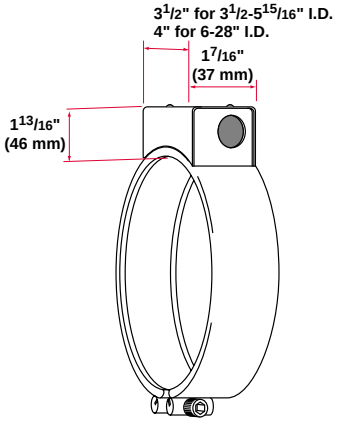

Metallic Terminal Box

Metallic terminal boxes are available from stock on 3½ inches inside diameter x 1½ inches wide (89 mm x 38 mm) or larger heaters. Terminal boxes, which attach directly to the heater, act as a safety feature by covering the terminals. Conduit may be attached to the box through ⅞ inch (22 mm) diameter holes in the ends of the box. Two piece heaters require two boxes. To order, specify **terminal box.**

Oversized terminal boxes are available on heaters two inches (51 mm) and wider. Consult a Watlow representative.

Band Heaters

MI Barrel and Nozzle

Variations

Continued

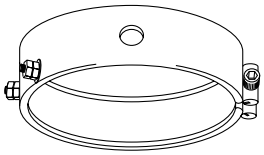

MI Band Heater With Holes

MI Band heaters with holes are available on all widths except one inch wide. Consult the Watlow factory in St. Louis, Missouri for hole sizes and location restraints. To order, specify **hole size** and **location.** Three inch inside diameter minimum.

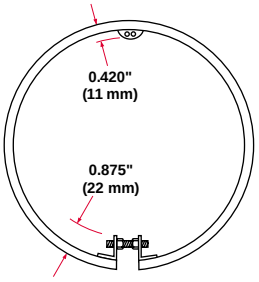

Outside Diameter Heater

Two fiberglass insulated lead wires rated to 840°F (450°C) exit a metal braid 180 degrees opposite from gap, Type B outside diameter designed and constructed to mate with inside diameter of cylinders. To order, specify **outside diameter** heater.

Clamping Variations

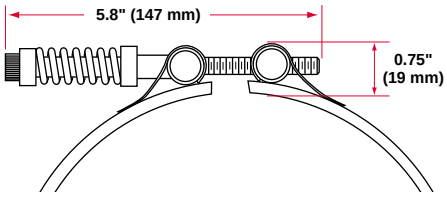

Tig Welded Barrel Nuts With Spring Loaded Clamping

Welded barrel nuts with spring loaded clamping are used during start-up to maintain a tight heater fit on large barrels. This clamping variation is standard for all MI Band heaters that are greater than 14 inches (355 mm) in diameter and 1½ inches (38 mm) or greater in width. Refer to MI Band *Clamping Matrix Application Guide*, **page 16**. For smaller diameter heaters, it is an option and must be ordered separately. To order, specify **spring loaded clamping.**

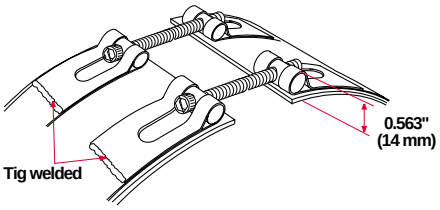

Tig Welded Barrel Nuts

An ideal way to provide access for instrumentation is to specify an oversized gap between the heater ends. If the clamp bar screw interferes with the positioning of the instrumentation device, welded barrel nuts are recommended. To order, specify **tig welded barrel nuts** and **gap dimension** when ordering.

Low Profile Tig Welded Barrel Nuts

Low profile barrel nuts are available on all widths. Low profile barrel nuts have a clearance of 0.406 inch (10 mm). To order, specify **low profile tig welded barrel nuts**.

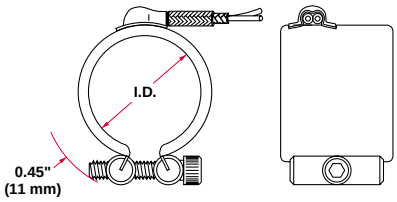

Low Profile Clamp Bars

Low profile clamp bars are available on both one (25 mm) and 1½ inch (38 mm) wide heaters, for wider widths consult factory. The bars are ¼ inch (6 mm) diameter with an 8-32 screw. To order, specify **low profile clamp bars.**

Band Heaters

MI Barrel and Nozzle

Sealed MI Nozzle Heater

Hermetically sealed tube construction makes this heater contamination proof and an excellent choice for a longer life in impure environments.

Non-Stock Options

- Leads greater than 12 inches (305 mm)
- Extended tube length (3 inch (76.2 mm) standard)
- 90° rotation Type B leads

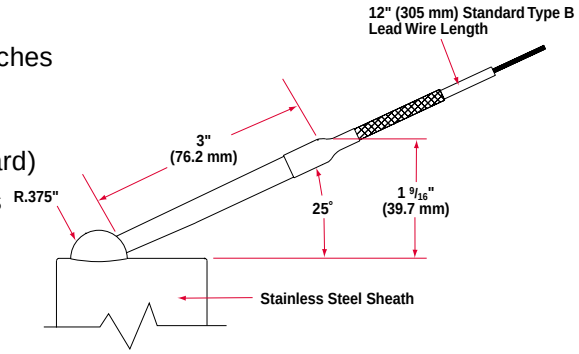

Sealed MI Stock Product

I.D. inch	I.D. (mm)	Width inch	Width (mm)	Construction	Volts	Watts	Watt Density W/in²	Watt Density (W/cm²)	Termination	Approx. Net Wt. lbs.	Approx. Net Wt. (kg)	Avail.	Code No.
1	(25.4)	1½	(38.1)	1pc	240	300	106	(16.4)	12" Type B	0.1	(0.05)	Stock	**SMB1A1JN1-B12H**
1	(25.4)	1½	(38.1)	1pc	120	300	106	(16.4)	12" Type B	0.1	(0.05)	Stock	**SMB1A1JN2-B12H**
1½	(38.1)	1	(25.4)	1pc	240	300	93	(14.4)	12" Type B	0.1	(0.05)	Stock	**SMB1J1AN1-B12H**
1½	(38.1)	1½	(38.1)	1pc	240	450	87	(13.5)	12" Type B	0.2	(0.09)	Stock	**SMB1J1JN2-B12H**
1½	(38.1)	1½	(38.1)	1pc	240	300	93	(14.4)	12" Type B	0.2	(0.09)	Stock	**SMB1J1JN3-B12H**
1½	(38.1)	2	(50.8)	1pc	240	450	57	(8.8)	12" Type B	0.3	(0.14)	Stock	**SMB1J2AN1-B12H**
1¾	(44.5)	1½	(38.1)	1pc	240	300	47	(7.3)	12" Type B	0.2	(0.09)	Stock	**SMB1N1JN1-B12H**
2	(50.8)	2	(50.8)	1pc	240	750	73	(11.3)	12" Type B	0.4	(0.18)	Stock	**SMB2A2AN1-B12H**

Note: Stock available with 12 inches of 450°C Type B leads.

MI Stock Product

F.O.B.: St. Louis, Missouri

I.D. in	I.D. (mm)	Width in	Width (mm)	Construction	Volts	Watts	Watt Density W/in²	Watt Density (W/cm²)	Termination	Approx. Net. Wt. lbs	Approx. Net. Wt. (kg)	Avail.	Code No.
1	(25.4)	1	(25.4)	1pc	120	100	61	(9.4)	Type B,C,E or H	0.1	(0.05)	Stock	**MB1A1AN2**
		1	(25.4)	1pc	120	150	92	(14.2)	Type B,C,E or H	0.1	(0.05)	Stock	**MB1A1AN1**
		1	(25.4)	1pc	120	200	122	(18.9)	Type B,C,E or H	0.1	(0.05)	Stock	**MB1A1AN3**
		1	(25.4)	1pc	240	200	122	(18.9)	Type B,C,E or H	0.1	(0.05)	Stock	**MB1A1AN4**
		1½	(38.1)	1pc	120	200	70	(10.8)	Type B,C,E or H	0.1	(0.05)	Stock	**MB1A1JN4**
		1½	(38.1)	1pc	240	200	70	(10.8)	Type B,C,E or H	0.1	(0.05)	Stock	**MB1A1JN3**
		1½	(38.1)	1pc	120	300	106	(16.4)	Type B,C,E or H	0.1	(0.05)	Stock	**MB1A1JN2**
		1½	(38.1)	1pc	240	300	106	(16.4)	Type B,C,E or H	0.1	(0.05)	Stock	**MB1A1JN1**
		1½	(38.1)	1pc	240	400	141	(21.8)	Type B,C,E or H	0.1	(0.05)	Stock	**MB1A1JN5**
1¼	(31.8)	1	(25.4)	1pc	120	250	104	(16.1)	Type B,C,E or H	0.1	(0.05)	Stock	**MB1E1AN2**
		1	(25.4)	1pc	240	250	104	(16.1)	Type B,C,E or H	0.1	(0.05)	Stock	**MB1E1AN1**
		1	(25.4)	1pc	240	300	124	(19.2)	Type B,C,E or H	0.1	(0.05)	Stock	**MB1E1AN3**
		1½	(38.1)	1pc	120	350	87	(13.5)	Type B,C,E or H	0.2	(0.09)	Stock	**MB1E1JN2**
		1½	(38.1)	1pc	240	350	87	(13.5)	Type B,C,E or H	0.2	(0.09)	Stock	**MB1E1JN1**
		1½	(38.1)	1pc	240	450	112	(17.3)	Type B,C,E or H	0.2	(0.09)	Stock	**MB1E1JN3**
1½	(38.1)	1	(25.4)	1pc	120	200	62	(9.6)	Type B,C,E or H	0.1	(0.05)	Stock	**MB1J1AN4**
		1	(25.4)	1pc	240	200	62	(9.6)	Type B,C,E or H	0.1	(0.05)	Stock	**MB1J1AN3**
		1	(25.4)	1pc	120	300	93	(14.4)	Type B,C,E or H	0.1	(0.05)	Stock	**MB1J1AN2**
		1	(25.4)	1pc	240	300	93	(14.4)	Type B,C,E or H	0.1	(0.05)	Stock	**MB1J1AN1**
		1	(25.4)	1pc	240	400	125	(19.3)	Type B,C,E or H	0.1	(0.05)	Stock	**MB1J1AN5**
		1½	(38.1)	1pc	120	300	58	(9.0)	Type B,C,E or H	0.2	(0.09)	Stock	**MB1J1JN1**
		1½	(38.1)	1pc	240	300	58	(9.0)	Type B,C,E or H	0.2	(0.09)	Stock	**MB1J1JN3**
		1½	(38.1)	1pc	240	300	64	(10.0)	Post	0.2	(0.09)	Stock	**MB1J1JP4**
		1½	(38.1)	1pc	240	450	87	(13.5)	Type B,C,E or H	0.2	(0.09)	Stock	**MB1J1JN2**
		1½	(38.1)	1pc	240	450	96	(14.8)	Post	0.2	(0.09)	Stock	**MB1J1JP6**
		1½	(38.1)	1pc	240	600	116	(17.9)	Type B,C,E or H	0.2	(0.09)	Stock	**MB1J1JN4**
		2	(50.8)	1pc	240	300	42	(6.5)	Type B,C,E or H	0.3	(0.14)	Stock	**MB1J2AN2**
		2	(50.8)	1pc	240	450	57	(8.8)	Type B,C,E or H	0.3	(0.14)	Stock	**MB1J2AN1**
		2	(50.8)	1pc	240	900	125	(19.3)	Type B,C,E or H	0.3	(0.14)	Stock	**MB1J2AN3**
		3	(76.2)	1pc	240	350	31	(4.8)	Type B,C,E or H	0.4	(0.18)	Stock	**MB1J3AN2**
		3	(76.2)	1pc	240	500	45	(7.0)	Type B,C,E or H	0.4	(0.18)	Stock	**MB1J3AN1**
		3	(76.2)	1pc	240	1000	104	(16.1)	Type B,C,E or H	0.4	(0.18)	Stock	**MB1J3AN3**

CONTINUED

Band Heaters

F.O.B.: St. Louis, Missouri

MI Barrel and Nozzle

I.D. in (mm)	Width in (mm)	Construction	Volts	Watts	Watt Density W/in² (W/cm²)	Termination	Approx. Net. Wt. lbs (kg)	Avail.	Code No.
1¾ (44.5)	1½ (38.1)	1pc	120	300	50 (7.7)	Type B,C,E or H	0.2 (0.09)	Stock	**MB1N1JN2**
	1½ (38.1)	1pc	240	300	47 (7.3)	Type B,C,E or H	0.2 (0.09)	Stock	**MB1N1JN1**
	1½ (38.1)	1pc	240	700	110 (17.0)	Type B,C,E or H	0.2 (0.09)	Stock	**MB1N1JN3**
	2 (50.8)	1pc	240	750	86 (13.3)	Type B,C,E or H	0.3 (0.14)	Stock	**MB1N2AN1**
2 (50.8)	1 (25.4)	1pc	120	350	73 (11.3)	Type B,C,E or H	0.2 (0.09)	Stock	**MB2A1AN2**
	1 (25.4)	1pc	240	350	73 (11.3)	Type B,C,E or H	0.2 (0.09)	Stock	**MB2A1AN1**
	1 (25.4)	1pc	240	450	94 (14.5)	Type B,C,E or H	0.2 (0.09)	Stock	**MB2A1AN3**
	1½ (38.1)	1pc	240	400	53 (8.2)	Type B,C,E or H	0.3 (0.14)	Stock	**MB2A1JN1**
	1½ (38.1)	1pc	240	1000	132 (20.4)	Type B,C,E or H	0.3 (0.14)	Stock	**MB2A1JN2**
	2 (50.8)	1pc	240	750	73 (11.3)	Type B,C,E or H	0.4 (0.18)	Stock	**MB2A2AN1**
	2 (50.8)	1pc	240	1200	125 (19.3)	Type B,C,E or H	0.4 (0.18)	Stock	**MB2A2AN2**
2¼ (57.2)	2½ (63.5)	1pc	240	1000	72 (11.2)	Type B,C,E or H	0.5 (0.23)	Stock	**MB2E2JN1**
2½ (63.5)	1 (25.4)	1pc	240	400	63 (9.7)	Type B,C,E or H	0.2 (0.09)	Stock	**MB2J1AN1**
	1½ (38.1)	1pc	240	500	50 (7.7)	Type B,C,E or H	0.4 (0.18)	Stock	**MB2J1JN1**
3 (76.2)	1 (25.4)	1pc	240	400	54 (8.4)	Post	0.3 (0.14)	Stock	**MB3A1AP1**
	1½ (38.1)	1pc	240	500	40 (6.2)	Post	0.4 (0.18)	Stock	**MB3A1JP1**
	1½ (38.1)	2pc exp	230/460	525	53 (8.2)	Post	0.4 (0.18)	Stock	**ME3A1JP10**
3½ (88.9)	2 (50.8)	1pc	240	800	42 (6.5)	Post	0.7 (0.32)	Stock	**MB3J2AP2**
3⅝ (92.1)	1½ (38.1)	2pc exp	230/460	650	51 (7.9)	Post	0.5 (0.23)	Stock	**ME3L1JP5**
4 (101.6)	1 (25.4)	1pc	240	700	62 (9.6)	Post	0.4 (0.18)	Stock	**MB4A1AP1**
	1½ (38.1)	2pc exp	230/460	625	43 (6.7)	Post	0.6 (0.27)	Stock	**ME4A1JP11**
	1½ (38.1)	2pc exp	230/460	725	50 (7.8)	Post	0.6 (0.27)	Stock	**ME4A1JP12**
	1½ (38.1)	1pc	240	800	48 (7.4)	Post	0.6 (0.27)	Stock	**MB4A1JP2**
4½ (114.3)	2½ (63.5)	1pc	240	1250	40 (6.2)	Post	1.0 (0.45)	Stock	**MB4J2JP1**
5 (127.0)	1½ (38.1)	2pc exp	240/480	1000	52 (8.1)	Post	0.8 (0.36)	Stock	**ME5A1JP8**
5¼ (133.4)	1½ (38.1)	2pc exp	230/460	600	29 (4.5)	Post	0.7 (0.32)	Stock	**ME5E1JP9**
	1½ (38.1)	2pc exp	240/480	1000	48 (7.4)	Post	0.8 (0.36)	Stock	**ME5E1JP1**
	3 (76.2)	2pc exp	230/460	1700	40 (6.2)	Post	1.5 (0.68)	Stock	**ME5E3AP5**
	4½ (114.3)	2pc exp	230/460	2400	38 (5.9)	Post	2.2 (1.0)	Stock	**ME5E4JP2**
	4½ (114.3)	2pc exp	230/460	2700	43 (6.6)	Post	2.2 (1.0)	Stock	**ME5E4JP3**
5½ (139.7)	1½ (38.1)	2pc exp	240/480	1000	46 (7.1)	Post	0.9 (0.40)	Stock	**ME5J1JP1**
6 (152.4)	1½ (38.1)	2pc exp	240/480	1000	41 (6.4)	Post	0.9 (0.40)	Stock	**ME6A1JP2**
6½ (165.1)	1½ (38.1)	2pc exp	240/480	1250	47 (7.3)	Post	1.0 (0.45)	Stock	**ME6J1JP5**
6¾ (171.5)	1½ (38.1)	2pc exp	230/460	815	29 (4.5)	Post	0.9 (0.40)	Stock	**ME6N1JP6**
	1½ (38.1)	2pc exp	230/460	1000	36 (5.6)	Post	0.9 (0.40)	Stock	**ME6N1JP7**
	4 (101.6)	2pc exp	230/460	2600	35 (5.4)	Post	2.5 (1.1)	Stock	**ME6N4AP2**
	5 (127.0)	2pc exp	230/460	3700	40 (6.2)	Post	3.2 (1.5)	Stock	**ME6N5AP3**
	6 (152.4)	2pc exp	230/460	3750	33 (5.1)	Post	3.8 (1.7)	Stock	**ME6N6AP5**
7 (177.8)	1½ (38.1)	2pc exp	240/480	1250	43 (6.6)	Post	1.1 (0.50)	Stock	**ME7A1JP4**
7½ (190.5)	1½ (38.1)	2pc exp	240/480	1500	47 (7.3)	Post	1.1 (0.50)	Stock	**ME7J1JP4**
7⅝ (193.7)	3 (76.2)	2pc exp	230/460	1800	28 (4.3)	Post	2.2 (1.0)	Stock	**ME7L3AP1**
8 (203.2)	1½ (38.1)	2pc exp	240/480	1250	37 (5.7)	Post	1.2 (0.54)	Stock	**ME8A1JP4**
9 (228.6)	1½ (38.1)	2pc exp	240/480	1500	39 (6.0)	Post	1.4 (0.64)	Stock	**ME9A1JP1**
9½ (241.3)	3 (76.2)	2pc exp	230/460	3000	37 (5.7)	Post	2.6 (1.2)	Stock	**ME9J3AP2**
11¼ (285.8)	3 (76.2)	2pc exp	230/460	2400	24 (3.7)	Post	3.2 (1.5)	Stock	**ME11E3AP2**
	5 (127.0)	2pc exp	230/460	5100	31 (4.8)	Post	5.2 (2.4)	Stock	**ME11E5AP1**

How to Order

To order your stock MI Band heater, specify:

- Quantity
- Watlow code number
- Options
- Lead type and length, or terminal type configuration (If code number has an "N" as the last letter in the code, you must specify termination type and lead length. Twelve inch leads will be supplied if not otherwise specified.)

Availability

Stock: Same day shipment on MI Band heaters with post terminals or 12 inch (305 mm) Type B leads. Longer lead lengths or other terminations will ship next day.

Made-to-Order: If stock units do not meet application needs, Watlow can manufacture MI Band heaters to special requirements. Please consult a Watlow sales engineer or authorized distributor.

Quick Ship • *Same day shipment on more than 1000 variations of THINBAND heaters.*

Band Heaters

THINBAND® Mica Barrel and Nozzle

The THINBAND® heater is Watlow's patented redesign of the mica band. THINBAND heaters deliver fast and install easily, keeping costs down and machines running.

Performance Capabilities

- Sheath temperatures to 900°F (480°C)
- Watt densities to 55 W/in^2 (8.5 W/cm^2)

Features and Benefits

- **New flexible, one-piece design** makes installation faster on plastic processing equipment because it can be opened to the full diameter of the barrel without internal damage to the heater. The THINBAND heater can be installed on a barrel without removing other band heaters already in place.
- **Same day shipment** on more than 1000 variations of THINBAND lead attachments is due to Watlow's exclusive Lead Adaptor—or LA—manufacturing method. Customers can reduce inventories and costly downtime.
- **Only one set of leads or terminals** is needed on the THINBAND heater, unlike the two sets required on the cumbersome two-piece replacement band heaters with straps.

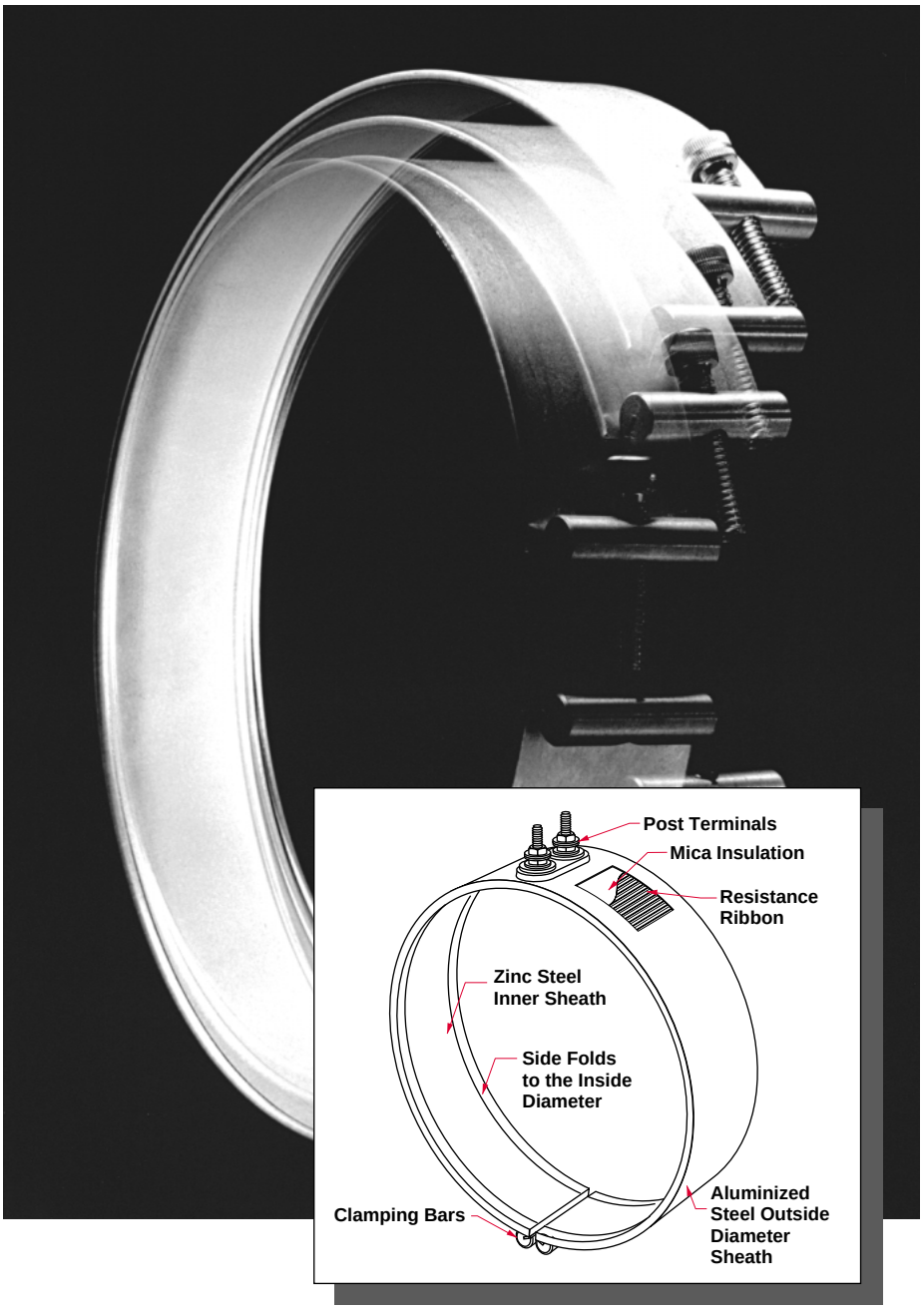

- **Quick Clamp** opens to fit over barrels and snaps in place with one easy flip of its latching lever. No need to remove other heaters.
- **Permanently attached clamping bars.**
- **Contamination resistance.** No folds on outside of heater.

Applications

- Extruders
- Blown film dies
- Injection molding machines
- Other cylinder heating applications

Band Heaters

THINBAND Mica Barrel and Nozzle

Applications and Technical Data

Operating Factors

Use as low a watt density rating as your application permits. A close match of the heat supplied to the actual requirements will reduce temperature overshoot, reduce cycling and increase the life of any band heater you use.

Calculate the **safe maximum wattage** for your heater using:

Heated Area x Maximum Watt Density

Calculate the **heated area** of your band heater by subtracting the no-heat area from the total area in contact with the cylinder (3.14 x I.D. x width). Subtract the no-heat area at the terminals (from table) and any additional no-heat area caused by holes, slots or oversize gaps.

Determine the maximum watt density of your heater from the graph on this page. The curves are based on narrow heaters mounted on a smooth, steel cylinder. Apply the necessary correction factors:

- For heaters 2¼ inches (57 mm) to five inches wide (127 mm), multiply watt density by 0.8.
- For high expansion cylinders (aluminum or brass), reduce the watt density by 3 W/in^2 (0.46 W/cm^2).
- For heaters 2¼ inches to five inches (57 mm to 127 mm) wide installed on a high expansion cylinder, reduce watt density by a total of 3 W/in^2 (0.46 W/cm^2) only.
- For regular cylinder surfaces other than smooth, machined finish, reduce watt density by 3 W/in^2 (0.46 W/cm^2).
- For heaters that will be insulated or enclosed, contact Watlow for specific watt densities.
- For units greater than 14 inches (355 mm) diameter, consult recommended clamping graph on **page 26**.
- For units used in vertical applications, consult factory for application assistance.

No-Heat Area for THINBAND (All Terminations)

Heater Type	Heater Size		No-Heat Area at Terminals in (mm)
	Diameter in (mm)	Width in (mm)	
One Piece	Less than 2½ (63.5)	Up to 7 (177.8)	1 (25.4) x width
Two Piece	5 (127) or more	More than 3 (76.2)	2 (50.8) x width

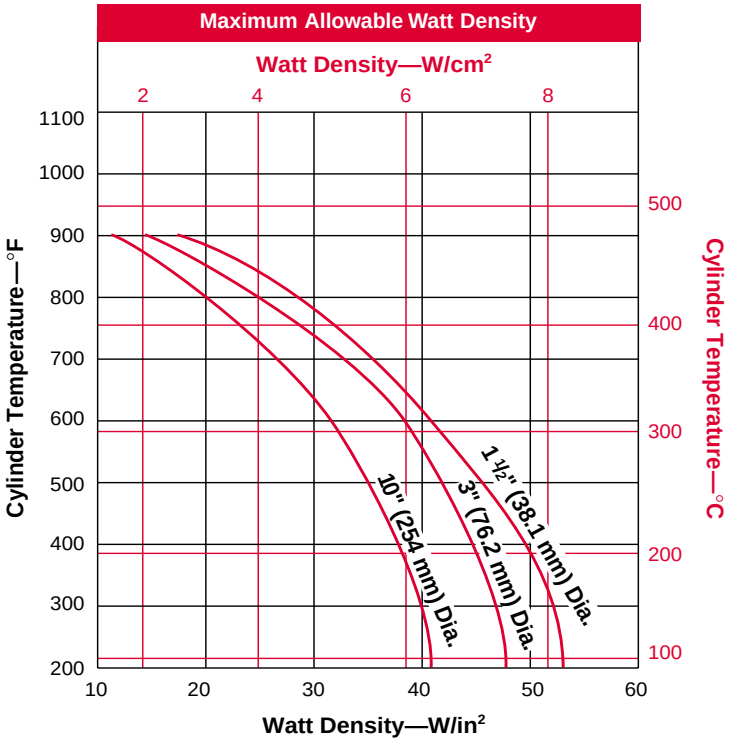

Band Heaters

THINBAND Mica Barrel and Nozzle

Physical Limitations of Lead Variations

Check the table to be certain the variations and lead arrangements you order are available on the heater size you require. If you need to exceed any limitations please contact a Watlow representative.

THINBAND Barrel

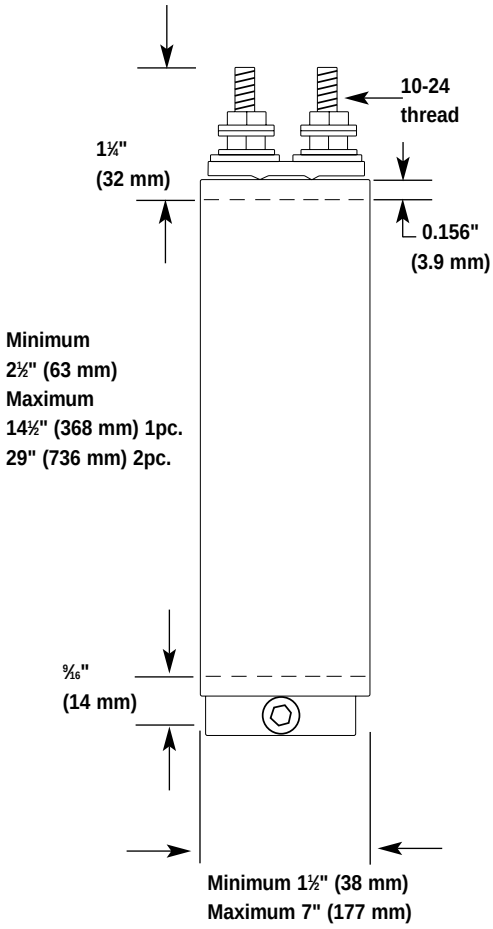

Physical Limitations of Lead Variations

Heater Type	Diameter				Width			
	Min.		Max.		Min.		Max.	
	in	(mm)	in	(mm)	in	(mm)	in	(mm)
1 pc. const.	1	(25.4)	14½	(368.3)	1½	(38.1)	7	(177.8)
2 pc. const.	5	(127)	29	(736.6)	1½	(38.1)	7	(177.8)
Nozzle								
Type A	1	(25.4)	4	(101.6)	1	(25.4)	6	(152.4)
Type L	1	(25.4)	4	(101.6)	1	(25.4)	6	(152.4)
Barrel								
Type T	2½	(63.5)			1½	(38.1)	7	(177.8)
Type H	2½	(63.5)			1½	(38.1)	7	(177.8)
Type F, FR	2½	(63.5)			1½	(38.1)	7	(177.8)
Type E	2½	(63.5)			1½	(38.1)	7	(177.8)
Type C, BR	2½	(63.5)			1½	(38.1)	7	(177.8)
Type K, KR	2½	(63.5)			1½	(38.1)	7	(177.8)
Terminal Box	3½	(88.9)			1½	(38.1)	7	(177.8)
European Plug								
1 pc. vertical	2½	(63.5)	14½	(368.3)	1½	(38.1)	7	(177.8)
1 pc. horizontal	2½	(63.5)	14½	(368.3)	1½	(38.1)	7	(177.8)
Welded Barrel Nuts								
1 pc.	2½	(63.5)	14½	(368.3)	1½	(38.1)	7	(177.8)

Note: Some combinations of maximums and minimums cannot occur on the same heater. Check the table to be certain the variations and lead arrangements you order are available on the heater size you require. If you need to exceed any limitations, please contact your Watlow representative.

Standard gap is ⅜ inch (9.53 mm) between clamp bars.

THINBAND Mica Barrel and Nozzle

Barrel Heater Quick Clamp Option

With Quick Clamp, the THINBAND heater can be secured tightly in place in a matter of seconds. The spring-loaded clamp secures the heater tightly around the barrel with an easy flip of the lever.

Features and Benefits

- THINBAND with Quick Clamp fits over barrels and snaps in place with easy flip of its latching lever.
- Hot change-outs are completed in seconds.
- Spring tensioned clamp keeps the THINBAND heater tight against barrel—won't loosen over time.
- Ideal for vertical applications.
- Available on selected stock and made-to-order THINBAND barrel heaters—minimum four inch (100 mm) diameter, 1½ inch (38 mm) width.
- Standard gap is ½ inch.

Quick Clamp eliminates tools, loose parts and hassle

- THINBAND opens up to fit over barrel. There is no need to remove other heaters.
- One easy flip of the latching lever and Quick Clamp shuts, completing installation.

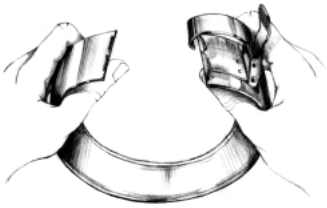

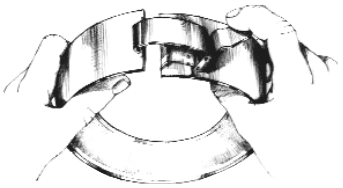

Clearance Dimensions

Width Range in (mm)	Number of Quick Clamps	Distance Between Clamps in (mm)
1½ (38.1) to 2 11/16 (69.3)	1	N/A
2¾ (69.9) to 3 11/16 (94.8)	2	½ (12.7)
3¾ (69.9) to 4 11/16 (120.1)	2	1 (25.4)
4¾ (120.6) to 5 11/16 (145.5)	3	½ (12.7)
5¾ (146.1) to 7 (145.5)	3	1 (25.4)

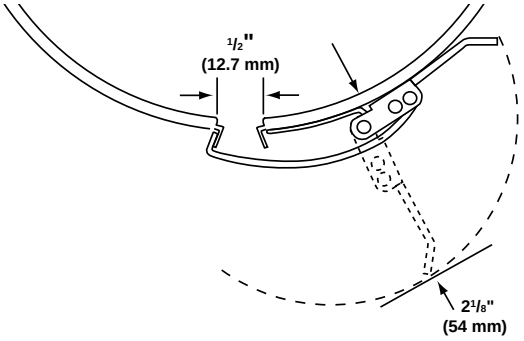

Recommended Clamping Options

THINBAND Barrel Products

Clamp Bars

Clamp Bars
Or Quick Clamp above 4" (101.6 mm) diameter

Quick Clamp
For 2 piece: Clamp bar at other gap

Coil Spring
For 2 piece only: Clamp bar at other gap

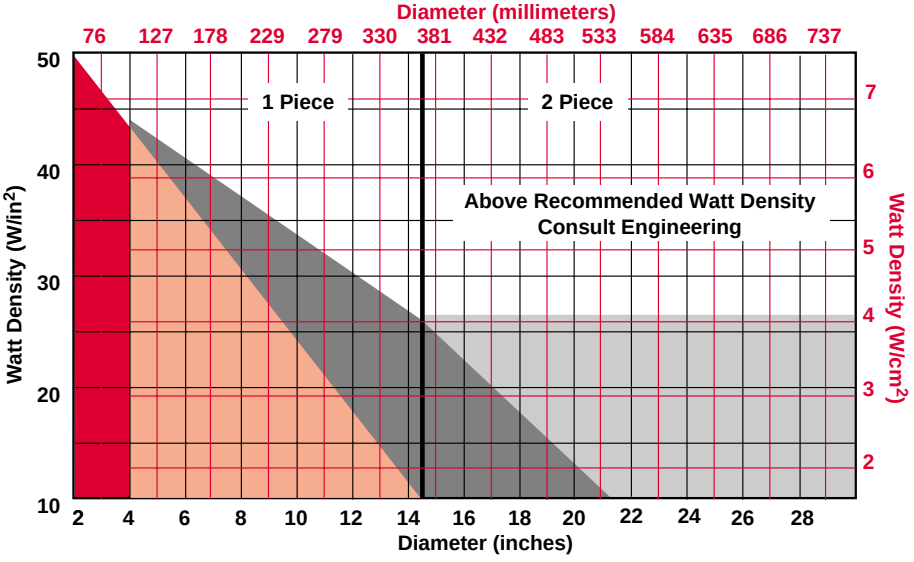

Notes: Widths four inches (101.6 mm) and over add two inches (50.8 mm) to diameter then reference chart clamp selection.

Band Heaters

THINBAND Mica Barrel and Nozzle

Barrel Heater Clamping Variations

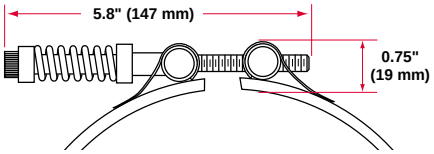

Tig Welded Barrel Nuts With Spring Loaded Clamping

Tig welded barrel nuts with spring loaded clamping are used during start-up to maintain a tight heater fit on large barrels. Stainless steel top metal is required.

Refer to the THINBAND recommended clamping graph on page 26. This option is mandatory on vertical applications. To order, specify **spring loaded clamping.**

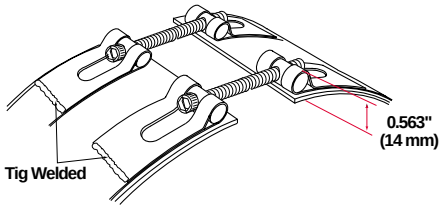

Tig Welded Barrel Nuts

An ideal way to provide access for instrumentation is to specify an oversized gap between the heater ends. If the THINBAND clamp bar screw interferes with the positioning of the instrumentation device, tig welded barrel nuts are recommended. Stainless steel top metal is required. Maximum gap is one inch (25 mm) Specify **tig welded barrel nuts** and **gap dimension** when ordering.

Non-Stock Option

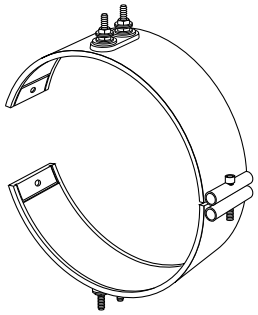

Clamping Pads

Clamping pads are used when an obstruction would prevent a standard full circumferential heater from fitting completely around a machine barrel. The clamping pads have a hole to allow easy fastening to the machine barrel. **Dimensional drawing required** when ordering.

Variations

Non-Stock Option

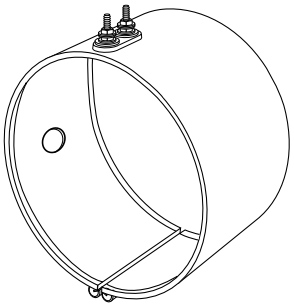

Holes

An economical way to provide access for instrumentation is to specify an oversized gap between the heater ends. A hole in the sheath should be specified only when all the cylinder surface adjacent to the hole must be heated. **When required, one hole may be provided in nearly any location as long as there is at least one inch (25 mm) between the hole and one side of the heater. Standard hole sizes up to two inches (51 mm) diameter**. Consult factory for limitations. For proper hole location, a **dimensional drawing is required.**

Band Heaters

THINBAND Mica Barrel and Nozzle

Barrel Heater Variations

Continued

Non-Stock Option

Stock LA Option

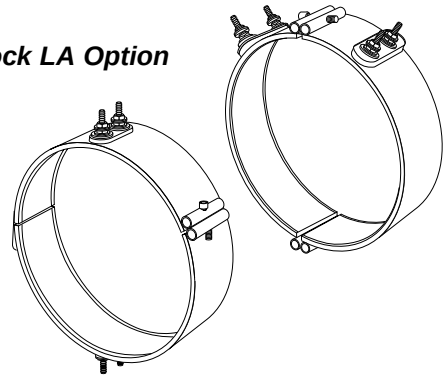

Two-Piece Band Heaters

Two-piece construction is available on heaters five inches (127 mm) or greater in diameter. Heaters 1½ inches (38 mm) wide and greater with post terminals have the two terminals side-by-side.

Note: When ordering two-piece band heaters, specify the **volts** and **watts per half.** On two-piece units with leads, you must also specify the **power supply voltage.** Example: a two-piece band that is 240V~(ac) per half may be wired in series to a 480V~(ac) power supply. In this case the band heater lead wire insulation must be rated for 480V~(ac). Available from stock by combining two one-piece heaters to create a large diameter. Terminations will be 90 degrees from each gap. **Quick Clamp** must be supplied at one gap when ordering.

Stock Option *Stock Option*

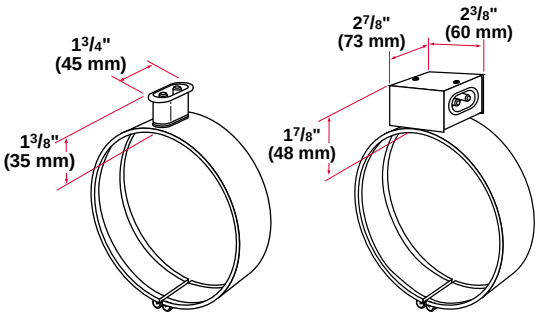

Vertical **Horizontal**

High Temperature "Quick Disconnect" European Style Plugs

They provide the simplest and safest way to apply power to band heaters. The combination of high temperature male and female quick disconnect plug assemblies eliminates all live exposed terminals and electrical wiring that can be a potential hazard to employees or machine. Maximum 15 amps at 240V~(ac), maximum volts 240. When ordering, specify **vertical** or **horizontal European** plug.

Stock Option

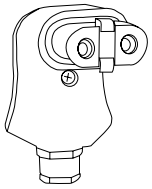

Right Angle
Code # N6027AF049

Stock Option

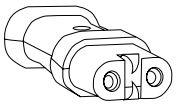

Straight
Code # N6027ZZ028

High Temperature "Quick Disconnect" European Style Female Adaptors

Available as an accessory item that must be used in conjunction with high temperature "quick disconnect" European style plugs. Specify code number **N6027AF049** or **N6027ZZ028** and quantity.

See page 25 for minimum/maximum dimensional requirements.

Band Heaters

THINBAND Mica Barrel and Nozzle

Barrel Heater Variations

Continued

Stock Option

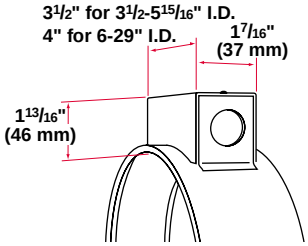

Stock Option

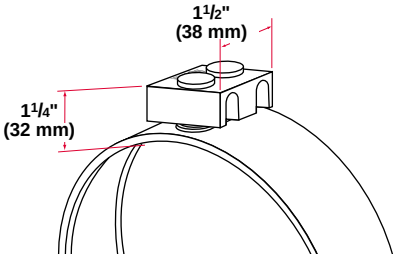

Code # Z-4919

Metallic Terminal Box

Available on heaters of 3½ inches (88 mm) diameter or larger. Terminal boxes are attached to the heater to cover the terminals for an added safety feature. Conduit may be attached to the box through ⅞ inch (22 mm) diameter holes in the ends of the box. Terminal box is available on one or two piece stock THINBAND heaters. When ordering, specify **terminal box.**

Ceramic Terminal Covers

A convenient and economic way to insulate post terminals. Sized for standard length posts. 10-24 screw thread size. These are supplied as an accessory item and shipped separately. Specify code number **Z-4919** and quantity.

Metric Clamp Bars and Screws

Metric hardware is available on made-to-order THINBAND heaters with post terminals and clamp bars. The post terminal thread size is M5X.8. The screw for the clamp bar will be M6X1.0 socket head cap screw. When ordering, specify **metric hardware** required.

Terminations

Stock LA Option

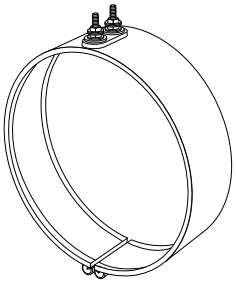

See page 25 for minimum/maximum dimensional requirements.

Type T

Post terminals provide a quick connection with ring or fork connectors, or buss strips. Threaded 10-24 studs or optional metric (M5X.8) are provided with double nuts and washers. Post terminals have a threaded length of 9/16 inch (14 mm) and require 1¼ inches (32 mm) clearance from the cylinder. Maximum amperage for post terminals is 35 amps and they can withstand up to 45 in-lbs (61.0 Newton-Meter) of torque. The increased torque is possible due to the unique add-on lead cap design, which makes the cap a separate entity from the heater. This means all of the torque carrying capability is maintained within the cap design, allowing the terminal hardware to be torqued to a specific setting and tested prior to connection to the heater.

The welded electrical connection to the heater is superior to crimped or staked connections which can loosen and oxidize during operation.

To order, specify **Type T.**

THINBAND Mica Barrel and Nozzle

Barrel Heater Terminations

Continued

Heaters rated at less than 250 volts use UL® approved lead insulation for operations to 482˚F (250˚C) as standard. Lead insulation UL® rated for operation to 850˚F (450˚C) may be required in high temperature applications where the leads are shrouded or enclosed with the heater. All heaters rated at more than 250V~(ac) use this wire.

Type K

Stock LA Option

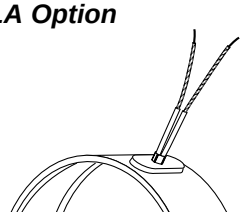

Flexible lead wires exit vertically from the heater. These leads can be bent adjacent to the heater for a quick and easy connection. To order, specify **Type K** and length.

Type KR

Stock LA Option

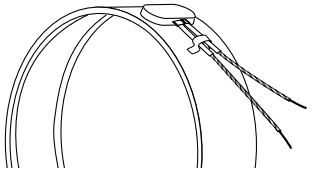

Same specifications as Type K except lead wires exit at right angle. To order, specify **Type KR** and length.

Type C

Stock LA Option

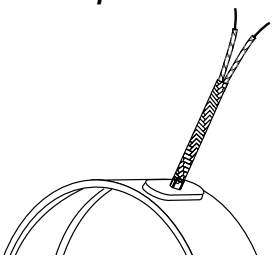

Two fiberglass lead wires exit a single tightly woven metal braid for good abrasion protection, lead flexibility and wiring convenience. Leads are two inches (51 mm) longer than the braid. To order, specify **Type C** and length.

Type BR

Stock LA Option

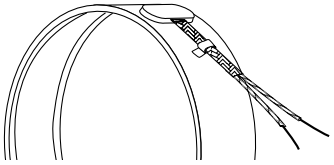

Same specifications as Type C except lead wires exit at right angle. To order, specify **Type BR** and length.

Type F

Stock LA Option

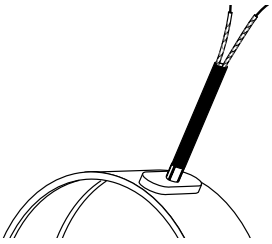

Loose fiberglass sleeving encloses two fiberglass leads for additional insulation protection where high temperature or minor abrasion is present. Leads are two inches (51 mm) longer than the sleeving. To order, specify **Type F** and length.

Type FR

Stock LA Option

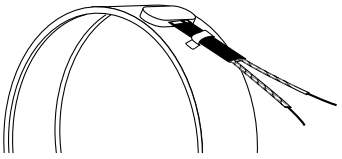

Same specifications as Type F except lead wires exit at right angle. To order, specify **Type FR** and length.

See page 25 for minimum/maximum dimensional requirements.

Band Heaters

THINBAND Mica Barrel and Nozzle

Barrel Heater Terminations

Continued

Type E

Stock LA Option

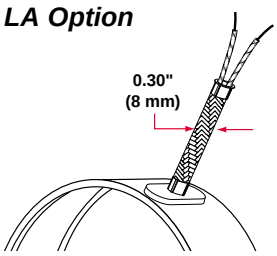

Loose metal braid encloses two fiberglass leads for good abrasion protection, lead flexibility and wiring convenience. Leads are two inches (51 mm) longer than the braid. To order, specify **Type E** and length.

Type H

Stock LA Option

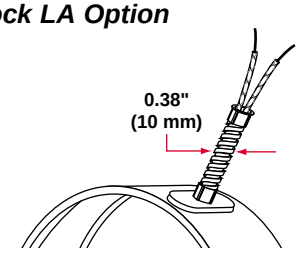

A stainless steel, flexible conduit encloses the leads for superior mechanical protection where lead abrasion is a particular problem. Leads are two inches (51 mm) longer than the conduit. To order, specify **Type H** and length.

Ground Wire or Terminal Stud

18 gauge uninsulated ground wire is available on all lead types except post terminals and Type C leads. A 10-24 ground terminal stud has a threaded length of 1 1/16 inch (17 mm). Studs are welded to the sheath and are provided with a green nut and washer. To order, specify **uninsulated ground wire** or **terminal stud.**

THINBAND Nozzle Heater Terminations

- **One to four inch diameter**
- **One to six inches wide**

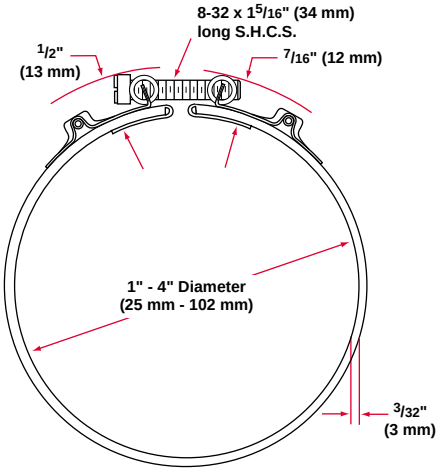

See page 25 for minimum/maximum dimensional requirements.

Type L

Stock Option

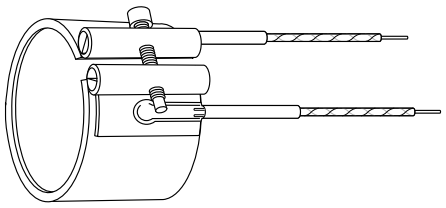

Flexible lead wires with fiberglass sleeves exit the nozzle heater on both sides of the gap. The heater sheath encloses the ends for protection against contamination. To order, specify **Type L.**

Type A

Stock Option

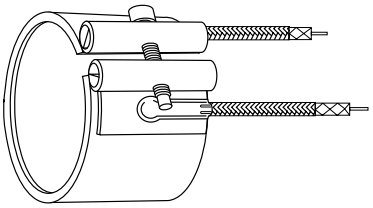

Especially designed for nozzle heaters. A galvanized metal braid over the fiberglass insulated leads provides strength and protection. The heater ends are enclosed to protect against melted plastic and contaminants. This arrangement permits one inch (25 mm) and wider nozzle heaters to be placed flush against a flange. Available on nozzle sizes only. To order, specify **Type A.**

THINBAND Mica Barrel and Nozzle

How to Utilize Watlow's Universal THINBAND Barrel Stock Program

Various diameters and widths of Watlow's unique patented flexible THINBAND barrel heaters are available with LA termination's for shipment faster than any in the market because of Watlow's unique stocking program.

Watlow stocks THINBAND barrel heaters ranging in diameters from three to nine inches (76.2 to 228.6 mm) in ¼ inch (6.35 mm) increments and widths in 1½ inch (38.1 mm), two inch and three inch (50.8 and 76.2 mm). Watlow can combine these sizes, creating a two-piece assembly ranging from nine to 18 inches (228.6 to 457.2 mm) in diameter, and any combination between three and 18 inches (76.2 and 457.2 mm) as a two-piece assembly. This versatility should satisfy almost any requirements whether millimeter or inch size barrels.

Regarding possible slight wattage differences from your original heater to your THINBAND replacement you must keep in mind that about 80 percent of the wattage is required to bring the barrel up to temperature. The 20 percent remaining is used to offset radiation and convection heat losses. So, if you have a 550 watt heater there is no harm in using a 500 or 600 watt stock THINBAND barrel heater.

There are three approaches to receive a THINBAND combination from stock. To illustrate, let's examine a customer who needs a 10 inch (254 mm) diameter heater but neither the size or width needed is in stock.

Solutions:

#1) Take two five-inch (127 mm) diameter heaters and curve to a 10 inch (254 mm) diameter. Please note that a Quick Clamp has to be added order for the heater to fit. This heater is offered next day delivery.

#2) Take two THINBANDs as noted in #1 but mix each diameter. For example, one four-inch (101.6 mm) and one six-inch (152.4 mm) diameter or a 4¾ (120.6 mm) diameter with a 5¼ (133.3 mm) diameter equal 10 inches (254 mm). Again you need a Quick Clamp. This heater is also offered next day delivery.

#3) Take two THINBANDs as in #1 or #2 but subtract a ¼ inch (6.35 mm) to the diameter and supply without the Quick Clamp for same day delivery. For example for a 10 inch (254 mm) diameter, any combination of 9¾ inch (248 mm) should be supplied to fit the 10 inch (254 mm) diameter requirement. The reason you have to reduce your selection size by a ¼ inch (6.35 mm) is to ensure a gap when tightening the clamp bars otherwise you will run out of gap and the bars will touch before you can tighten the heater completely to the barrel. This is only necessary when Quick Clamp is not included.

Installation Procedures

1. Install heaters over a clean surface.
2. After installing the unit, begin to tighten the clamp screw. The clamping screw is ¼ inch-20 x 1¼ inch, allen head cap screw. Begin tightening the clamp bars. If the clamp bars appear not to have seated, tap the clamp bars with a small hammer to insure the bars are well seated in the angle formed by the 60 degree bent tab and the heater.
3. If the bar has multiple screws, alternately tighten the screws as you would the lug nuts on a car wheel to insure even loading.
4. Torque all screws to approximately 8 ft-lbs.
5. Take a soft rubber mallet and tap gently around the circumference of the heater while tightening the screws. This will ensure the heater fit to the barrel is maximized without any air gaps.
6. When installing terminal lugs, torque the top nuts to 30 in-lbs. The bottom nut should not be touched as it is factory torqued to 45 in-lbs. at assembly.
7. Retighten the heater after the heater has operated for a short time. Always make adjustments when the heater and cylinder are cold.

Band Heaters

OEM Band Heater Stock List

Cincinnati Milacron

Cincinnati Milacron Code No.	Watlow Code No.	I.D. inch	Width inch	Volts	Watts	Termination
326330	**ME5A1JP10**	5	1 ½	240/480	580	Post
326331	**ME6J1JP6**	6 ½	1 ½	240/480	1000	Post
326332	**ME7J1JP5**	7 ½	1 ½	240/480	900	Post
326333	**ME8A1JP8**	8	1 ½	240/480	1000	Post
326335	**ME10A1JP1**	10	1 ½	240/480	1200	Post
326336	**ME11A1JP2**	11	1 ½	240/480	1480	Post
326338①	**ME8A1JP9**	8	1 ½	240/480	800	Post
326340	**ME9A1JP9**	9	1 ½	240/480	1100	Post
326341	**ME9J1JP6**	9 ½	1 ½	240/480	1000	Post
326342	**ME13A1JP4**	13	1 ½	240/480	1400	Post
326344	**ME14J1JP2**	14 ½	1 ½	240/480	1480	Post
326346	**ME5A1JP11**	5	1 ½	240/480	770	Post
326347	**ME7A1JP6**	7	1 ½	240/480	1000	Post
3901993①	**B1J4AX2**	1 ½	4	120	500	51" dual SS braided leads
3953682	**ME5J1JP6**	5 ½	1 ½	240/480	600	Post
3961105	**ME12A1JP1**	12	1 ½	240/480	1480	Post
3994402	**B5R5EX1**	5 ⅞	5 ¼	240/480	2350	Post
3994523	**B7J7EX2**	7 ½	7 ¼	240/480	5000	Post
5021019	**B9H2AX1**	9 7/16	2	240/480	1700	Post
5021021	**B8B4AX1**	8 1/16	4	240/480	2100	Post
5021022①	**B8B9EX1**	8 1/16	9 ¼	240/480	4900	Post
5021232	**B11P2AX1**	11 13/16	2	240/480	2200	Post
5021233	**B11P3JX1**	11 13/16	3 ½	240/480	3900	Post
5021234	**B8H3JX1**	8 7/16	3 ½	240/480	2800	Post
5021428①	**B4S2GX2**	4 15/16	2 ⅜	240/480	1200	Post
5022010	**B6J5JX2**	6 ½	5 ½	240/480	3000	Post
5022015	**B5J4JX1**	5 ½	4 ½	240/480	1700	Post
5024377	**B10H2AX1**	10 7/16	2	240/480	2000	Post
5024378	**B10H3JX1**	10 7/16	3 ½	240/480	3300	Post
5024379	**B8H5JX1**	8 7/16	5 ½	240/480	3800	Post
5025500	**B5J4JX2**	5 ½	4 ½	240/480	2500	Post
5027465①	**B13A2JX6**	13	2 ½	240/480	3000	Post
5027466	**B13A4NX1**	13	4 ¾	240/480	5000	Post
5033192	**ME13A2JP1**	13	2 ½	240/480	3000	Post
5033194	**ME9H4AP1**	9 7/16	4	240/480	4000	Post
5034485	**ME9H3AP2**	9 7/16	3	240/480	2400	Post
5034486	**ME9H2AP2**	9 7/16	2	240/480	1600	Post
5034487	**ME8B3AP1**	8 1/16	3	240/480	2000	Post
5035117	**ME8B4AP1**	8 1/16	4	240/480	2650	Post
5035761	**ME11A4AP1**	11	4	230/460	3500	Post

CONTINUED

① Available in limited quantities. Contact the factory for delivery information.

Band Heaters

OEM Band Heater Stock List

Cincinnati Milacron

Cincinnati Milacron Code No.	Watlow Code No.	I.D. inch	Width inch	Volts	Watts	Termination
5038858	**ME5R5AP3**	5 ⅞	5	240/480	2350	Post
5039028	**ME8H5AP1**	8 7/16	5	240/480	3250	Post
5039197	**ME6J5AP1**	6 ½	5	240/480	3000	Post
5039239	**ME7J3AP2**	7 ½	3	240/480	2325	Post
5039247①	**ME9H3AP3**	9 7/16	3	240/480	2300	Post

HPM/New Britain

HPM/ New Britain Code No.	Watlow Code No.	I.D. inch	Width inch	Volts	Watts	Termination
146-503	**B2E0RA1C**	2 ¼	⅞	120	215	60" dual SS braided leads
155-1187	**B4S2AH1A**	4 15/16	2	240/480	800	18" flexible hose and leads
155-1188	**B4S3AH2B**	4 15/16	3	240/480	1200	20" flexible hose and leads
155-730	**B4R5AH1A**	4 ⅞	5	240/480	1520	36" flexible hose and leads
155-731	**B4R10AH1B**	4 ⅞	10	240/480	2250	44" flexible hose and leads
155-732	**B4R4SH1A**	4 ⅞	4 15/16	240/480	1100	48" flexible hose and leads
220-1532	**B6N2EH1A**	6 ¾	2 ¼	240/480	1200	48" flexible hose and leads
300-1512	**B8E3AH1A**	8 ¼	3	240/480	1950	49" flexible hose and leads
300-1513	**B8E5NH5A**	8 ¼	5 ¾	240/480	3750	49" flexible hose and leads
300-1514	**B5E2AH2A**	5 ¼	2	240/480	850	49" flexible hose and leads
375-0042	**B6N4NH1A**	6 ¾	4 ¾	240/480	2500	48" flexible hose and leads
C2-008-490A	**B4S4AH1B**	4 15/16	4	240/480	1500	48" flexible hose and leads
C2-008-491A	**B4S3AH2**	4 15/16	3	240/480	1200	48" flexible hose and leads
C63-3142	**B4E2NH1B**	4 ¼	2 ¾	240/480	950	43" flexible hose and leads
EA2005730	**B1A1NA1A**	1	1 ¾	120	230	60" dual SS braided leads

CONTINUED

① Available in limited quantities. Contact the factory for delivery information.

Band Heaters

OEM Band Heater Stock List

HPM/New Britain

HPM/ New Britain Code No.	Watlow Code No.	I.D. inch	Width inch	Volts	Watts	Termination
EA2201532	**B6N2EH1A**	6 ¾	2 ¼	240/480	1200	48" flexible hose and leads
EA2201600	**B3N1JH1A**	3 ¾	1 ½	480	400	48" flexible hose and leads
EA3001512	**B8E3AH1A**	8 ¼	3	240/480	1950	49" flexible hose and leads
EA3001513	**B8E5NH5A**	8 ¼	5 ¾	240/480	3750	49" flexible hose and leads
EA3001514	**B5E2AH2A**	5 ¼	2	240/480	850	49" flexible hose and leads
EA3750042	**B6N4NH1A**	6 ¾	4 ¾	240/480	2500	48" flexible hose and leads
EC1460403	**B2E0RA1C**	2 ¼	⅞	120	215	60" dual SS braided leads
EC1463096	**B4E2NH2A**	4 ¼	2 ¾	240/480	950	36" flexible hose and leads
EC1550732	**B4R4SH1A**	4 ⅞	4 15/16	240/480	1100	48" flexible hose and leads
EC2008490	**B4S4AH1H**	4 15/16	4	240/480	1500	82" leads/72" flexible hose
EC2008491A①	**B4S3AH2G**	4 15/16	3	240/480	1200	82" leads/72" flexible hose

① Available in limited quantities. Contact the factory for delivery information.

Mitsubishi

Mitsubishi Code No.	Watlow Code No.	I.D. inch	Width inch	Volts	Watts	Termination
US207060T	**STB5J5A8-T**	5 ½	5	240	1900	Post
US207060W	**STB6A5J3-T**	6	5 ½	240	2400	Post
US207099C	**STB2C1A7-XX7**	2 ⅛	1	220	250	74" dual SS braided leads
US207101M	**STB5A5J1-T**	5	5 ½	240	2000	Post
US207159R	**STB5A2G1-T**	5	2 ⅜	240	950	Post

Band Heaters

OEM Band Heater Stock List

Natco

Natco Code No.	Watlow Code No.	I.D. inch	Width inch	Volts	Watts	Termination
CR12202-1	**B7B3JP1**	7 1/16	3 1/2	240/480	1200	Post
CR12202-2	**B7B3JP2**	7 1/16	3 1/2	240/480	1650	Post
CR12202-5	**B6F3AP1**	6 5/16	3	240/480	1250	Post
CR12202-10	**B12J4AP1**	12 1/2	4	240/480	3000	Post
CR12202-11	**B12J3JP2**	12 1/2	3 1/2	240/480	3000	Post
CR12202-13	**B9L3AP2**	9 5/8	3	240/480	2000	Post
CR12202-16	**B8E4AP1**	8 1/4	4	240/480	3000	Post
CR12202-18	**B10E4AP1**	10 1/4	4	240/480	3000	Post

Nissei

Nissei Code No.	Watlow Code No.	I.D. inch	Width inch	Volts	Watts	Termination
8H1601107-51	**B06F04FE-268**	6 5/16	4 5/16	230/460	1800	60" single SS braided leads
8H0300451-04	**B01D01NB-276**	1 3/16	1 3/4	220	170	36" single SS braided leads
8H0500501-02	**B01S01SE-275**	1 15/16	1 15/16	220	320	84" single SS braided leads
8H1000701-51	**B03S02NE-273**	3 15/16	2 3/4	220	720	96" single SS braided leads
8H1061807-51	**B04C07BE-271**	4 1/8	7 1/16	230/460	2000	36" single SS braided leads
8H1200687-53	**B04N02ME-270**	4 3/4	2 11/16	230/460	900	48" single SS braided leads

Band Heaters

OEM Band Heater Stock List

Reed

Reed Code No.	Watlow Code No.	I.D. inch	Width inch	Volts	Watts	Termination
RC-159088-C	**B1N2AG2**	1 ¾	2	240	300	144" fiberglass leads
RC-159088-D	**B1N2AG1**	1 ¾	2	480	300	144" fiberglass leads
RC-159089-L	**B7J3AG2**	7 ½	3	480	1400	144" fiberglass leads
RD-128613	**B6A3AR1**	6	3	230/460	1400	Post
RD-129890	**B4R2AR1**	4 ⅞	2	240/480	760	Post
RD-132322	**B7A3AR1**	7	3	230/460	1650	Post
RD-158900-B	**B5A3AX1**	5	3	240/480	1200	Post
RD-159337-B	**B6J2JX1**	6 ½	2 ½	240/480	1200	Post
ZE-600475-FD	**B4N3AX1**	4 ¾	3	240/480	1100	Post
ZE-600600-FF	**B6A3AX9**	6	3	240/480	1400	Post
ZE-600700-FG	**B7A3AX1C**	7	3	240/480	1650	Post
ZE-600800-FJ	**B8A3AX6**	8	3	240/480	1900	Post
ZE-600875-FK①	**B8N3AX6**	8 ¾	3	240/480	2000	Post

① Available in limited quantities. Contact the factory for delivery information.

Band Heaters

OEM Band Heater Stock List

Toshiba

Toshiba Code No.	Watlow Code No.	I.D. inch	Width inch	Volts	Watts	Termination
316M3602	**B04F04PX-291**	4 5/16	4 13/16	240/480	1830	Post
333M0003	**B06F04JR-289**	6 5/16	4 1/2	480	2430	Post
333M0005	**B12D03GR-287**	12 3/16	3 7/8	240/480	3500	Post
333M0008	**B06J03CR-286**	6 1/2	3 1/8	480	1740	Post
333M0012①	**B06R04CR-284**	6 7/8	4 1/8	240/480	2420	Post
333M3903	**B06F04JR-289**	6 5/16	4 1/2	480	2430	Post
333M3905	**B12D03GR-287**	12 3/16	3 7/8	240/480	3500	Post
333M3908	**B06J03CR-286**	6 1/2	3 1/8	480	1740	Post
333M3912	**B06R04CR-284**	6 7/8	4 1/8	240/480	2420	Post
333M4001	**B08H02GP-283**	8 7/16	2 3/8	480	1700	Post
333M4002①	**B08M02KP-282**	8 11/16	2 9/16	240/480	1900	Post
333M4105①	**B04C02NC-279**	4 1/8	2 3/4	220	160	20" single SS braided leads
3382G6015	**B2D1GC1**	2 3/16	1 3/8	240	300	67" single SS braided leads
3383G017	**B3J3SP1**	3 1/2	3 15/16	240	1180	Post
3383G057	**B4F4AP1**	4 5/16	4	240	1500	Post
3383G058	**B4F3CP1**	4 5/16	3 1/8	240	1160	Post
3383G0812	**B4M5NP1**	4 11/16	5 3/4	240	2300	Post
3383G1207①	**B6F5MP1**	6 5/16	5 11/16	240	3000	Post
3383G129	**B6F6EP1**	6 5/16	6 1/4	240	3380	Post
347L50	**B3K3GP3**	3 9/16	3 3/8	240	955	Post
348L7102	**B1J1NC1**	1 1/2	1 3/4	240	320	39" single SS braided leads
348L7103	**B3C1GC1**	3 1/8	1 3/8	240	530	39" single SS braided leads
382G5107①	**B1D1DC1**	1 3/16	1 3/16	240	170	78" single SS braided leads
382G5603①	**B1S1AC2**	1 15/16	1	240	200	48" single SS braided leads
382G6008①	**B2C1AC5**	2 1/8	1	240	215	67" single SS braided leads
382G6009	**B2C1AC5B**	2 1/8	1	240	215	55" single SS braided leads
382G6102	**B2F1NC1**	2 5/16	1 3/4	240	500	86" single SS braided leads
382G6904	**B2G1GC1**	2 3/8	1 3/8	240	240	19" single SS braided leads
383G0101	**B3J3FP1**	3 1/2	3 5/16	240	910	Post
383G0502	**B4F3JP1**	4 5/16	3 1/2	240	1210	Post
383G0802	**STB4M4L1-T**	4 11/16	4 5/8	240	1760	Post
383G1101	**B6F2GR1**	6 5/16	2 3/8	480	1100	Post
383G1102①	**B6F2GR2**	6 5/16	2 3/8	240	1100	Post
383G1105	**B6F3JR1**	6 5/16	3 1/2	240	1600	Post
383G1203	**B6F6AP1**	6 5/16	6	240	3000	Post
383G1211	**B6F7FP1**	6 5/16	7 5/16	240	3900	Post
383G4505	**B6J4FR1**	6 1/2	4 5/16	240	2400	Post
383G4510①	**B11A8BR1**	11	8 1/16	240/240	6700	Post
383G4512	**B10A6RR1**	10	6 7/8	240/480	5500	Post
383G4515	**B8E5MR2**	8 1/4	5 11/16	240	4720	Post

CONTINUED

① Available in limited quantities. Contact the factory for delivery information.

Band Heaters

OEM Band Heater Stock List

Toshiba

Toshiba Code No.	Watlow Code No.	I.D. inch	Width inch	Volts	Watts	Termination
383G452	**B6R3KR1**	6 7/8	3 9/16	240/240	2100	Post
383G4601	**B8H2GP1**	8 7/16	2 3/8	240	1700	Post
383G4601	**B08H02GP-283**	8 7/16	2 3/8	480	1700	Post
383G4602	**B8M2KP1**	8 11/16	2 9/16	480	1900	Post
383G4602	**B08M02KP-282**	8 11/16	2 9/16	240/480	1900	Post
383G4603	**B10E2SP2**	10 1/4	2 15/16	240	2600	Post
383G4604	**B12D3FP1**	12 3/16	3 5/16	240	3500	Post
383G4605	**B14D4FP1**	14 3/16	4 5/16	240/240	5200	Post
383G4606	**B12P3SP2**	12 3/16	3 15/16	240	4300	Post
383G4701	**STB4F1K1-CX2**	4 5/16	1 9/16	240	401	20" single SS braided leads
39742592	**B9A2JX2**	9	2 1/2	240/480	1785	Post, dual voltage
44H21132W	**B1G0NA1**	1 3/8	3/4	240	85	40" dual SS braided leads
97680614	**B3J2NP1**	3 1/2	2 3/4	240	940	Post
9768371W①	**B5R6AP1**	5 7/8	6	240	2810	Post
98821109	**B2A1AA10**	2	1	240	180	47" dual SS braided leads
9882114W	**B2D1AA2**	2 3/16	1	240	200	78" dual SS braided leads

① Available in limited quantities. Contact the factory for delivery information.

Band Heaters

THINBAND Mica Barrel and Nozzle

Stock Product List

I.D. in (mm)	Width in (mm)	Volts	Watts	Watt Density W/in² (W/cm²)	1 pc. or 2 pc.	Terminals, Leads and Special Features	Approx. Net. Wt. lbs (kg)	Avail.	Code No.	Former Code No.
15/16 (23.8)	2 (50.8)	240	175	45 (7.0)	1	Mica Band–12" Type K	0.2 0.09	Stock	**BOS2AK1**	–
1 (25.4)	1 (25.4)	120	100	44 (6.8)	1	THINBAND–Type A or L	0.2 0.09	Stock	**STB1A1A1**	**B1A1AN1**
	1 (25.4)	240	100	44 (6.8)	1	THINBAND–Type A or L	0.2 0.09	Stock	**STB1A1A2**	**B1A1AN2**
	1 (25.4)	120	125	55 ① (8.5)	1	THINBAND–Type A or L	0.2 0.09	Stock	**STB1A1A3**	**B1A1AN3**
	1 (25.4)	240	125	55 ① (8.5)	1	THINBAND–Type A or L	0.2 0.09	Stock	**STB1A1A4**	**B1A1AN4**
	1½ (38.1)	120	150	44 (6.8)	1	THINBAND–Type A or L	0.2 0.09	Stock	**STB1A1J1**	**B1A1JN1**
	1½ (38.1)	240	150	44 (6.8)	1	THINBAND–Type A or L	0.2 0.09	Stock	**STB1A1J2**	**B1A1JN2**
	1½ (38.1)	120	200	59 ① (9.1)	1	THINBAND–Type A or L	0.2 0.09	Stock	**STB1A1J3**	**B1A1JN3**
	1½ (38.1)	240	200	59 ① (9.1)	1	THINBAND–Type A or L	0.2 0.09	Stock	**STB1A1J4**	**B1A1JN4**
1¼ (31.8)	⅝ (15.9)	120	100	54 ① (8.4)	1	Mica Band–12" Type A	0.2 0.09	Stock	**B1EOLA1**	–
	1¼ (31.8)	120	125	33 (5.1)	1	THINBAND–Type A or L	0.2 0.09	Stock	**STB1E1E1**	**B1E1EN1**
	1¼ (31.8)	240	125	33 (5.1)	1	THINBAND–Type A or L	0.2 0.09	Stock	**STB1E1E2**	**B1E1EN2**
	1¼ (31.8)	240	75	20 (3.1)	1	THINBAND–Type A or L	0.2 0.09	Stock	**STB1E1E4**	**B1E1EN3**
	1¼ (31.8)	240	250	67 ① (10.4)	1	THINBAND–Type A or L	0.2 0.09	Stock	**STB1E1E3**	**B1E1EN4**
	3 (76.2)	240	150	16 (2.5)	1	THINBAND–Type A or L	0.5 0.22	Stock	**STB1E3A1**	**B1E3AN1**
	3 (76.2)	240	250	27 (4.2)	1	THINBAND–Type A or L	0.5 0.22	Stock	**STB1E3A2**	**B1E3AN2**
	3 (76.2)	240	300	33 (5.1)	1	THINBAND–Type A or L	0.5 0.22	Stock	**STB1E3A3**	**B1E3AN3**
1⅜ (34.9)	1 (25.4)	120	140	41 (6.4)	1	THINBAND–Type A or L	0.2 0.09	Stock	**STB1G1A1**	**B1G1AN1**
	2 (50.8)	240	300	51 ① (7.9)	1	THINBAND–Type A or L	0.3 0.14	Stock	**STB1G2A1**	**B1G2AK1**
	3½ (88.9)	240	200	17 (2.6)	1	THINBAND–Type A or L	0.6 0.27	Stock	**STB1G3J1**	**B1G3JA1**
	3½ (88.9)	240	250	21 (3.3)	1	THINBAND–Type A or L	0.6 0.27	Stock	**STB1G3J2**	**B1G3JA2**
1½ (38.1)	⅞ (22.2)	240	100	31 (4.8)	1	Mica Band–Type A or L	0.2 0.09	Stock	**B1JORN1**	–
	1 (25.4)	120	100	26 (4.0)	1	THINBAND–Type A or L	0.2 0.09	Stock	**STB1J1A1**	**B1J1AN1**
	1 (25.4)	240	100	26 (4.0)	1	THINBAND–Type A or L	0.2 0.09	Stock	**STB1J1A2**	**B1J1AN2**
	1 (25.4)	120	150	39 (6.0)	1	THINBAND–Type A or L	0.2 0.09	Stock	**STB1J1A3**	**B1J1AN3**
	1 (25.4)	240	150	39 (6.0)	1	THINBAND–Type A or L	0.2 0.09	Stock	**STB1J1A4**	**B1J1AN4**
	1 (25.4)	120	200	52 ① (8.0)	1	THINBAND–Type A or L	0.2 0.09	Stock	**STB1J1A5**	**B1J1AN5**
	1 (25.4)	240	200	52 ① (8.0)	1	THINBAND–Type A or L	0.2 0.09	Stock	**STB1J1A6**	**B1J1AN6**
	1 (25.4)	240	150	40 (6.2)	1	Mica Band–Post Terminals Only w/Strap	0.2 0.09	Stock	**B1J1AP2**	–
	1¼ (31.8)	240	250	52 ① (8.0)	1	THINBAND–Type A or L	0.2 0.09	Stock	**STB1J1E1**	**B1J1EN1**
	1½ (38.1)	120	200	35 (5.4)	1	THINBAND–Type A or L	0.3 0.14	Stock	**STB1J1J1**	**B1J1JN1**
	1½ (38.1)	240	200	35 (5.4)	1	THINBAND–Type A or L	0.3 0.14	Stock	**STB1J1J2**	**B1J1JN2**
	1½ (38.1)	120	250	43 (6.6)	1	THINBAND–Type A or L	0.3 0.14	Stock	**STB1J1J3**	**B1J1JN3**
	1½ (38.1)	240	250	43 (6.6)	1	THINBAND–Type A or L	0.3 0.14	Stock	**STB1J1J4**	**B1J1JN4**
	1½ (38.1)	120	275	48 ① (7.4)	1	THINBAND–Type A or L	0.3 0.14	Stock	**STB1J1J5**	**B1J1JN5**
	1½ (38.1)	240	275	48 ① (7.4)	1	THINBAND–Type A or L	0.3 0.14	Stock	**STB1J1J6**	**B1J1JN6**
	1½ (38.1)	240	300	52 ① (8.0)	1	THINBAND–Type A or L	0.3 0.14	Stock	**STB1J1J7**	**B1J1JN7**
	1½ (38.1)	240	200	36 (5.6)	1	Mica Band–Post Terminals Only w/Strap	0.3 0.14	Stock	**B1J1JP3**	–
	1½ (38.1)	240	200	43 (6.7)	1	Mica Band–36" Black Glass 90° from Gap	0.3 0.14	Stock	**B1J1JX1**	–
	1½ (38.1)	240	250	45 (7.0)	1	Mica Band–Post Terminals Only w/Strap	0.3 0.14	Stock	**B1J1JP4**	–
	1½ (38.1)	120	275	49 ① (7.6)	1	Mica Band–Post Terminals Only w/Strap	0.3 0.14	Stock	**B1J1JP5**	–
	1½ (38.1)	240	275	49 ① (7.6)	1	Mica Band–Post Terminals Only w/Strap	0.3 0.14	Stock	**B1J1JP6**	–

CONTINUED

① Watt density is above Watlow recommendations at some common molding temperatures.

Band Heaters

F.O.B.: St. Louis, Missouri

THINBAND Mica Barrel and Nozzle

I.D. in (mm)	Width in (mm)	Volts	Watts	Watt Density W/in² (W/cm²)	1 pc. or 2 pc.	Terminals, Leads and Special Features	Approx. Net. Wt. lbs (kg)	Avail.	Code No.	Former Code No.
1½ (38.1)	2 (50.8)	240	300	39 (6.0)	1	THINBAND–Type A or L	0.3 0.14	Stock	STB1J2A1	B1J2AN1
	2 (50.8)	240	300	40 (6.2)	1	Mica Band–Post Terminals Only w/Strap	0.3 0.14	Stock	B1J2AP1	–
	2½ (63.5)	240	400	42 (6.5)	1	THINBAND–Type A or L	0.5 0.23	Stock	STB1J2J1	–
	2½ (63.5)	240	400	43 (6.7)	1	Mica Band–36" Type C 90° from Gap	0.5 0.23	Stock	B1J2JC1	–
	3 (76.2)	240	350	30 (4.6)	1	THINBAND–Type A or L	0.6 0.27	Stock	STB1J3A1	B1J3AN1
	3 (76.2)	240	500	43 (6.7)	1	THINBAND–Type A or L	0.6 0.27	Stock	STB1J3A2	B1J3AN2
	3 (76.2)	240	800	69 ① (10.7)	1	THINBAND–Type A or L	0.6 0.27	Stock	STB1J3A3	B1J3AN3
	4 (101.6)	240	600	39 (6.0)	1	THINBAND–Type A or L	0.6 0.27	Stock	STB1J4A1	–
1⅝ (41.3)	1¼ (31.8)	240	250	49 ① (7.6)	1	Mica Band–Post Terminals Only w/Strap	0.3 0.14	Stock	B1L1EP1	–
	1¼ (31.8)	240	300	59 ① (9.1)	1	Mica Band–Post Terminals Only w/Strap	0.3 0.14	Stock	B1L1EP2	–
	4¼ (108.0)	120	550	30 (4.6)	1	Mica Band–Post Terminals Only w/Strap	0.7 0.32	Stock	B1L4ER1	–
1¾ (44.5)	1 (25.4)	240	175	39 (6.0)	1	Mica Band–Post Terminals Only w/Strap	0.3 0.14	Stock	B1N1AP1	–
	1½ (38.1)	240	150	22 (3.4)	1	THINBAND–Type A or L	0.3 0.14	Stock	STB1N1J1	B1N1JN1
	1½ (38.1)	120	200	29 (4.5)	1	THINBAND–Type A or L	0.3 0.14	Stock	STB1N1J2	B1N1JN2
	1½ (38.1)	240	200	29 (4.5)	1	THINBAND–Type A or L	0.3 0.14	Stock	STB1N1J3	B1N1JN3/4
	1½ (38.1)	240	225	32 (5.0)	1	THINBAND–Type A or L	0.3 0.14	Stock	STB1N1J5	B1N1JN5
	1½ (38.1)	240	250	36 (5.6)	1	THINBAND–Type A or L	0.3 0.14	Stock	STB1N1J6	B1N1JN6
1¾ (44.5)	1½ (38.1)	120	300	43 (6.7)	1	THINBAND–Type A or L	0.3 0.14	Stock	STB1N1J7	B1N1JN7
	1½ (38.1)	240	300	43 (6.7)	1	THINBAND–Type A or L	0.3 0.14	Stock	STB1N1J8	B1N1JN8
	1½ (38.1)	240	200	30 (4.6)	1	Mica Band–72" Type C	0.3 0.14	Stock	B1N1JC3	–
	1½ (38.1)	240	300	44 (6.8)	1	Mica Band–Post Terminals Only w/Strap	0.3 0.14	Stock	B1N1JP5	–
1⅞ (47.6)	1 (25.4)	240	140	28 (4.3)	1	THINBAND–Type A or L	0.3 0.14	Stock	STB1R1A1	B1R1AL1
	1 (25.4)	240	200	41 (6.4)	1	Mica Band–Post Terminals Only w/Strap	0.3 0.14	Stock	B1R1AP1	–
2 (50.8)	1½ (38.1)	120	300	42 (6.5)	1	Mica Band–Post Terminals Only w/Strap	0.3 0.14	Stock	B2A1JP1	–
	1½ (38.1)	240	300	42 (6.5)	1	Mica Band–Post Terminals Only w/Strap	0.3 0.14	Stock	B2A1JP2	–
2⅛ (54.0)	1 (25.4)	120	200	34 (5.3)	1	THINBAND–Type A or L	0.3 0.14	Stock	STB2C1A1	B2C1AN1
	2 (52.8)	240	200	17 (2.6)	1	THINBAND–Type A or L	0.3 0.14	Stock	STB2C2A1	B2C2AN1
2¼ (57.2)	⅞ (22.2)	120	215	43 (6.7)	1	Mica Band–Type A or L	0.3 0.14	Stock	B2E0RN1	–
	1 (25.4)	120	250	45 ① (7.0)	1	Mica Band–Post Terminals Only w/Strap	0.3 0.14	Stock	B2E1AP1	–
	1 (25.4)	240	250	45 ① (7.0)	1	Mica Band–Post Terminals Only w/Strap	0.3 0.14	Stock	B2E1AP2	–
	2 (50.8)	240	525	47 ① (7.3)	1	Mica Band–Post Terminals Only w/Strap	0.6 0.27	Stock	B2E2AP1	–
	2½ (63.5)	240	500	38 (5.9)	1	Mica Band–36" Type K w/sleeving	0.6 0.27	Stock	B2E2JK1	–
2⅜ (60.3)	1 (25.4)	240	100	17 (2.6)	1	Mica Band–Post Terminals Only w/Strap	0.3 0.14	Stock	B2G1AP1	–
	1 (25.4)	240	250	42 (6.5)	1	Mica Band–Post Terminals Only w/Strap	0.3 0.14	Stock	B2G1AP2	–
	1 (25.4)	240	275	46 ① (7.1)	1	Mica Band–Post Terminals Only w/Strap	0.3 0.14	Stock	B2G1AP3	–
2½ (63.5)	1 (25.4)	120	300	47 ① (7.3)	1	Mica Band–Post Terminals Only w/Strap	0.3 0.14	Stock	B2J1AP1	–
	1 (25.4)	240	300	47 ① (7.3)	1	Mica Band–Post Terminals Only w/Strap	0.3 0.14	Stock	B2J1AP2	–
	1½ (38.1)	240	200	19 (2.9)	1	THINBAND–Type A or L	0.3 0.14	Stock	STB2J1J1	B2J1JN1
	1½ (38.1)	120	300	31 (4.8)	1	THINBAND–All LA Options, except A or L	0.4 0.18	Stock	STB2J1J8	B2J1JP1
	1½ (38.1)	240	300	31 (4.8)	1	THINBAND–All LA Options, except A or L	0.4 0.18	Stock	STB2J1J9	B2J1JP2
	1½ (38.1)	120	350	37 (5.7)	1	THINBAND–All LA Options, except A or L	0.4 0.18	Stock	STB2J1J10	B2J1JP3
	1½ (38.1)	240	350	37 (5.7)	1	THINBAND–All LA Options, except A or L	0.4 0.18	Stock	STB2J1J11	B2J1JP4
	2⅜ (60.3)	240	550	39 (6.0)	1	THINBAND–All LA Options, except A or L	0.6 0.27	Stock	STB2J2G1	B2J2GP1②
	2⅞ (73.0)	240	650	38 (5.9)	1	THINBAND–All LA Options, except A or L	0.7 0.32	Stock	STB2J2R1	B2J2RP1②

CONTINUED

① Watt density is above Watlow recommendations at some common molding temperatures.
② Mica Band-Post-thermocouple hole at gap, THINBAND replacement does not include thermocouple hole at gap.

THINBAND Mica Barrel and Nozzle

I.D. in (mm)	Width in (mm)	Volts	Watts	Watt Density W/in² (W/cm²)	1 pc. or 2 pc.	Terminals, Leads and Special Features	Approx. Net. Wt. lbs (kg)	Avail.	Code No.	Former Code No.
2½ (63.5)	4 (101.6)	240	850	32 (5.0)	1	THINBAND–All LA Options, except A or L	1.0 0.45	Stock	**STB2J4A2**	**B2J4AP1②**
	5 (127.0)	240	1150	35 (5.4)	1	THINBAND–All LA Options, except A or L	1.2 0.54	Stock	**STB2J5A3**	**B2J5AP1②**
	8 (203.2)	240	1800	33 (5.1)	1	Mica Band–Post–T/C Hole at Gap	2.0 0.91	Stock	**B2J8AP1**	**–**
2¾ (69.9)	1½ (38.1)	240	400	34 (5.3)	1	THINBAND–Type A or L	0.4 0.18	Stock	**STB2N1J1**	**B2N1JN1**
3 (76.2)	1 (25.4)	240	200	23 (3.6)	1	THINBAND–Type A or L	0.4 0.18	Stock	**STB3A1A2**	**B3A1AN1**
	1 (25.4)	240	250	29 (4.5)	1	THINBAND–Type A or L	0.4 0.18	Stock	**STB3A1A3**	**B3A1AN2**
	1 (25.4)	240	300	35 (5.4)	1	THINBAND–Type A or L	0.4 0.18	Stock	**STB3A1A4**	**B3A1AN3**
	1 (25.4)	240	300	38 (5.9)	1	Mica Band–Post Terminals Only w/Strap	0.4 0.18	Stock	**B3A1AP1**	**–**
	1 (25.4)	240	350	44 (6.8)	1	Mica Band–Post Terminals Only w/Strap	0.4 0.18	Stock	**B3A1AP2**	**–**
	1 (25.4)	240	400	50 ① (7.7)	1	Mica Band–Post Terminals Only w/Strap	0.4 0.18	Stock	**B3A1AP4**	**–**
	1½ (38.1)	240	400	31 (4.8)	1	THINBAND–Type A or L	0.5 0.23	Stock	**STB3A1J5**	**B3A1JN1**
	1½ (38.1)	120	600	47 ① (7.3)	1	THINBAND–Type A or L	0.5 0.23	Stock	**STB3A1J6**	**B3A1JN2**
	1½ (38.1)	240	400	32 (5.0)	1	THINBAND–All LA Options, except A or L	0.5 0.23	Stock	**STB3A1J1**	**B3A1JP1/C1**
	1½ (38.1)	240	450	36 (5.6)	1	THINBAND–All LA Options, except A or L	0.5 0.23	Stock	**STB3A1J2**	**B3A1JP2**
	1½ (38.1)	120	500	40 (6.2)	1	THINBAND–All LA Options, except A or L	0.5 0.23	Stock	**STB3A1J3**	**B3A1JP3**
	1½ (38.1)	240	500	40 (6.2)	1	THINBAND–All LA Options, except A or L	0.5 0.23	Stock	**STB3A1J4**	**B3A1JP4**
	2 (50.8)	240	500	30 (4.6)	1	THINBAND–All LA Options, except A or L	0.8 0.36	Stock	**STB3A2A1**	**B3A2AP1**
	2 (50.8)	240	600	36 (5.6)	1	THINBAND–All LA Options, except A or L	0.8 0.36	Stock	**STB3A2A2**	**B3A2AP2**
	2½ (63.5)	240	650	33 (5.1)	1	THINBAND–All LA Options, except A or L	0.8 0.36	Stock	**STB3A2J7**	**B3A2JP1**
	3 (76.2)	240	750	30 (4.7)	1	THINBAND–All LA Options, except A or L	1.0 0.46	Stock	**STB3A3A18**	**–**
3⅛ (79.4)	1 (25.4)	240	400	48 ① (7.4)	1	Mica Band–Post Terminals Only w/Strap	0.4 0.18	Stock	**B3C1AP1**	**–**
3¼ (82.6)	1½ (38.1)	240	400	29 (4.5)	1	THINBAND–All LA Options, except A or L	0.5 0.23	Stock	**STB3E1J1**	**B3E1JP1**
	2 (50.8)	240	500	27 (4.2)	1	THINBAND–All LA Options, except A or L	0.7 0.33	Stock	**STB3E2A41**	**–**
	3 (76.2)	240	650	24 (3.7)	1	THINBAND–All LA Options, except A or L	1.0 0.50	Stock	**STB3E3A10**	**–**
3½ (88.9)	1 (25.4)	120	300	32 (5.0)	1	Mica Band–36" Type C	0.5 0.23	Stock	**B3J1AC1**	**–**
	1½ (38.1)	120	400	27 (4.2)	1	THINBAND–All LA Options, except A or L	0.5 0.23	Stock	**STB3J1J1**	**B3J1JP1**
	1½ (38.1)	240	500	33 (5.1)	1	THINBAND–All LA Options, except A or L	0.5 0.23	Stock	**STB3J1J2**	**B3J1JP3/P2**
	2 (50.8)	240	650	33 (5.1)	1	THINBAND–All LA Options, except A or L	0.7 0.32	Stock	**STB3J2A1**	**B3J2AP1**
	2½ (63.5)	240	750	30 (4.6)	1	THINBAND–All LA Options, except A or L	0.8 0.36	Stock	**STB3J2J1**	**B3J2JP1**
	3 (76.2)	240	750	25 (3.9)	1	THINBAND–All LA Options, except A or L	1.1 0.54	Stock	**STB3J3A31**	**–**
3¾ (95. 3)	1 (25.4)	240	350	34 (5.3)	1	Mica Band–Post Terminals Only w/Strap	0.5 0.23	Stock	**B3N1AP1**	**–**
	1 (25.4)	120/240	350	40 (6.2)	2	Mica Band–Post Terminals Only w/Strap	0.5 0.23	Stock	**B3N1AP2**	**–**
	1½ (38.1)	240	700	43 ① (6.7)	1	THINBAND–All LA Options, except A or L	0.6 0.27	Stock	**STB3N1J1**	**B3N1JP1**
	2 (50.8)	240	600	28 (4.4)	1	THINBAND–All LA Options, except A or L	0.8 0.38	Stock	**STB3N2A17**	**–**
	2½ (63.5)	240	850	33 (5.1)	1	THINBAND–All LA Options, except A or L	1.0 0.45	Stock	**STB3N2J1**	**B3N2JP1**
	3 (76.2)	240	900	28 (4.4)	1	THINBAND–All LA Options, except A or L	1.2 0.58	Stock	**STB3N3A5**	**–**
4 (101.6)	1 (25.4)	240	625	55 ① (8.5)	1	Mica Band–Post Terminals Only w/Strap	0.7 0.32	Stock	**B4A1AP1**	**–**
	1½ (38.1)	240	550	32 (5.0)	1	THINBAND–All LA Options, except A or L	0.6 0.27	Stock	**STB4A1J1**	**B4A1JP1/2**
	1½ (38.1)	240	750	43 (6.5)	1	THINBAND–All LA Options, except A or L	0.6 0.27	Stock	**STB4A1J2**	**B4A1JP4**
	1½ (38.1)	240	650	37 (5.7)	1	THINBAND–All LA Options, except A or L	0.6 0.27	Stock	**STB4A1J3**	**B4A1JP3**
	2 (50.8)	240	550	24 (3.7)	1	THINBAND–All LA Options, except A or L	0.8 0.36	Stock	**STB4A2A1**	**B4A2AP1**
	2 (50.8)	240	800	35 (5.4)	1	THINBAND–All LA Options, except A or L	0.8 0.36	Stock	**STB4A2A2**	**B4A2AP2**
	3 (76.2)	240	1000	29 (4.5)	1	THINBAND–All LA Options, except A or L	1.2 0.58	Stock	**STB4A3A31**	**–**

CONTINUED

① Watt density is above Watlow recommendations at some common molding temperatures.
② Mica Band-Post-thermocouple hole at gap, THINBAND replacement does not include thermocouple hole at gap.

Band Heaters

THINBAND Mica Barrel and Nozzle

I.D. in (mm)	Width in (mm)	Volts	Watts	Watt Density W/in² (W/cm²)	1 pc. or 2 pc.	Terminals, Leads and Special Features	Approx. Net. Wt. lbs (kg)	Avail.	Code No.	Former Code No.
4¼ (107.9)	1½ (38.1)	240	550	30 (4.7)	1	THINBAND–All LA Options, except A or L	0.7 0.32	Stock	**STB4E1J13**	–
	2 (50.8)	240	700	28 (4.4)	1	THINBAND–All LA Options, except A or L	0.8 0.36	Stock	**STB4E2A20**	–
	3 (76.2)	240	900	24 (3.7)	1	THINBAND–All LA Options, except A or L	1.2 0.58	Stock	**STB4E3A9**	–
4½ (114.3)	1 (25.4)	240	350	28 (4.3)	1	Mica Band–Post Terminals Only w/Strap	0.6 0.27	Stock	**B4J1AP1**	–
	1½ (38.1)	240	650	33 (5.1)	1	THINBAND–All LA Options, except A or L	0.7 0.32	Stock	**STB4J1J1**	**B4J1JP2/3**
	1½ (38.1)	240	400	20 (3.1)	1	THINBAND–All LA Options, except A or L	0.7 0.32	Stock	**STB4J1J2**	**B4J1JP1**
	2 (50.8)	240	500	19 (2.9)	1	THINBAND–All LA Options, except A or L	0.9 0.41	Stock	**STB4J2A1**	**B4J2AP1**
	2½ (63.5)	240	1000	35 (5.4)	1	THINBAND–All LA Options, except A or L	1.0 0.45	Stock	**STB4J2J1**	**B4J2JC1**
	3 (76.2)	240	1200	30 (4.7)	1	THINBAND–All LA Options, except A or L	1.2 0.58	Stock	**STB4J3A26**	–
4¾(120.7)	1½ (38.1)	240	600	29 (4.5)	1	THINBAND–All LA Options, except A or L	0.7 0.32	Stock	**STB4N1J1**	–
	1½ (38.1)	480	600	29 (4.5)	1	THINBAND–All LA Options, except A or L	0.7 0.32	Stock	**STB4N1J2**	–
	1½ (38.1)	240	650	31 (4.8)	1	THINBAND–All LA Options, except A or L	0.7 0.32	Stock	**STB4N1J3**	**B4N1JP2**
	2 (50.8)	240	800	29 (4.5)	1	THINBAND–All LA Options, except A or L	0.9 0.41	Stock	**STB4N2A11**	–
	2 (50.8)	480	800	29 (4.5)	1	THINBAND–All LA Options, except A or L	0.9 0.41	Stock	**STB4N2A12**	–
	3 (76.2)	240	1100	26 (4.1)	1	THINBAND–All LA Options, except A or L	1.4 0.64	Stock	**STB4N3A12**	–
	3 (76.2)	480	1100	26 (4.1)	1	THINBAND–All LA Options, except A or L	1.4 0.64	Stock	**STB4N3A13**	–
4⅞ (123.8)	1½ (38.1)	240	900	42 (6.5)	1	THINBAND–All LA Options, except A or L	0.7 0.32	Stock	**STB4R1J1**	**B4R1JP1**
	2 (50.8)	240	650	23 (3.6)	1	THINBAND–All LA Options, except A or L	0.9 0.41	Stock	**STB4R2A1**	**B4R2AP1**
	2 (50.8)	240/480	760	28 (4.3)	2	Mica Band–Post (2 on 1)	0.9 0.41	Stock	**B4R2AR1**	–
	2 (50.8)	240	760	27 (4.2)	1	THINBAND–All LA Options, except A or L	0.9 0.41	Stock	**STB4R2A2**	–
	2 (50.8)	480	760	27 (4.2)	1	THINBAND–All LA Options, except A or L	0.9 0.41	Stock	**STB4R2A3**	–
5 (127.0)	1½ (38.1)	240	700	32 (5.0)	1	THINBAND–All LA Options, except A or L	0.7 0.32	Stock	**STB5A1J1**	**B5A1JP1/2**
	1½ (38.1)	240	900	41 (6.4)	1	THINBAND–All LA Options, except A or L	0.7 0.32	Stock	**STB5A1J2**	**B5A1JP3**
	2 (50.8)	240	900	30 (4.65)	1	THINBAND–All LA Options, except A or L	0.9 0.41	Stock	**STB5A2A27**	–
	2 (50.8)	480	900	30 (4.65)	1	THINBAND–All LA Options, except A or L	0.9 0.41	Stock	**STB5A2A28**	–
	3 (76.2)	240	850	20 (3.1)	1	THINBAND–All LA Options, except A or L	1.4 0.64	Stock	**STB5A3A5**	**B5A3AP1**
	3¼ (82.6)	240	1250	26 (4.0)	1	THINBAND–All LA Options, except A or L	1.5 0.68	Stock	**STB5A3E1**	**B5A3ER1**
5⅛ (130.2)	1½ (38.1)	240	900	42 ① (6.5)	1	THINBAND–All LA Options, except A or L	0.7 0.32	Stock	**STB5C1J2**	**B5C1JP1**
5¼ (133.4)	1 (25.4)	240	500	33 (5.1)	1	Mica Band–72" (Type C-180° from ⅜" Gap)	0.7 0.32	Stock	**B5E1AC1**	–
	1½ (38.1)	240/480	600	30 (4.6)	2	Mica Band–Post Terminals Only w/Strap	0.8 0.36	Stock	**B5E1JP2**	–
	1½ (38.1)	240	600	26 (4.0)	1	THINBAND–All LA Options, except A or L	0.8 0.36	Stock	**STB5E1J1**	**B5E1JP1**
	1½ (38.1)	480	600	43 ① (6.7)	1	THINBAND–All LA Options, except A or L	0.8 0.36	Stock	**STB5E1J5**	–
	1½ (38.1)	240	1000	43 ① (6.7)	1	THINBAND–All LA Options, except A or L	0.8 0.36	Stock	**STB5E1J2**	**B5E1JP3**
	2 (50.8)	240	1000	33 ① (5.1)	1	THINBAND–All LA Options, except A or L	0.9 0.41	Stock	**STB5E2A1**	**B5E2AP1**
	3 (76.2)	240	1200	26 (4.08)	1	THINBAND–All LA Options, except A or L	1.4 0.64	Stock	**STB5E3A14**	–
	3 (76.2)	480	1200	26 (4.08)	1	THINBAND–All LA Options, except A or L	1.4 0.64	Stock	**STB5E3A15**	–
5½ (139.7)	1½ (38.1)	240	800	33 (5.1)	1	THINBAND–All LA Options, except A or L	0.8 0.36	Stock	**STB5J1J1**	**B5J1JP1/2**
	1½ (38.1)	240	900	37 (5.7)	1	THINBAND–All LA Options, except A or L	0.8 0.36	Stock	**STB5J1J2**	**B5J1JP3**
	2 (50.8)	240	1000	30 (4.65)	1	THINBAND–All LA Options, except A or L	0.9 0.41	Stock	**STB5J2A23**	–
	2 (50.8)	480	1000	30 (4.65)	1	THINBAND–All LA Options, except A or L	0.9 0.41	Stock	**STB5J2A24**	–
	3 (76.2)	240	1500	30 (4.65)	1	THINBAND–All LA Options, except A or L	1.6 0.72	Stock	**STB5J3A19**	–
	3 (76.2)	480	1500	30 (4.65)	1	THINBAND–All LA Options, except A or L	1.6 0.72	Stock	**STB5J3A20**	–
5¾ (146.0)	1½ (38.1)	240	750	29 (4.47)	1	THINBAND–All LA Options, except A or L	0.9 0.41	Stock	**STB5N1J17**	–
	1½ (38.1)	480	750	29 (4.47)	1	THINBAND–All LA Options, except A or L	0.9 0.41	Stock	**STB5N1J18**	–

CONTINUED

① Watt density is above Watlow recommendations at some common molding temperatures.

Band Heaters

THINBAND Mica Barrel and Nozzle

I.D. in (mm)	Width in (mm)	Volts	Watts	Watt Density W/in² (W/cm²)	1 pc. or 2 pc.	Terminals, Leads and Special Features	Approx. Net. Wt. lbs (kg)	Avail.	Code No.	Former Code No.
5¾ (146.0	2 (50.8)	240	1000	30 (4.65)	1	THINBAND–All LA Options, except A or L	1.0 0.46	Stock	**STB5N2A5**	–
	2 (50.8)	480	1000	30 (4.65)	1	THINBAND–All LA Options, except A or L	1.0 0.46	Stock	**STB5N2A6**	–
	3 (76.2)	240	1500	30 (4.65)	1	THINBAND–All LA Options, except A or L	1.8 0.82	Stock	**STB5N3A8**	–
	3 (76.2)	480	1500	30 (4.65)	1	THINBAND–All LA Options, except A or L	1.8 0.82	Stock	**STB5N3A9**	–
6 (152.4)	1⅜ (34.9)	120/240	950	43 ① (6.7)	2	Mica Band–Post Terminals Only w/Strap	0.9 0.41	Stock	**B6A1GP1**	–
	1½ (38.1)	240	600	22 (3.4)	1	THINBAND–All LA Options, except A or L	0.9 0.41	Stock	**STB6A1J1**	**B6A1JP1**
	1½ (38.1)	240	850	32 (5.0)	1	THINBAND–All LA Options, except A or L	0.9 0.41	Stock	**STB6A1J2**	**B6A1JP2/3**
	1½ (38.1)	240	1000	37 (5.7)	1	THINBAND–All LA Options, except A or L	0.9 0.41	Stock	**STB6A1J3**	**B6A1JP4**
	2 (50.8)	240	1000	28 (4.31)	1	THINBAND–All LA Options, except A or L	0.8 0.36	Stock	**STB6A2A36**	–
	2 (50.8)	480	1000	28 (4.31)	1	THINBAND–All LA Options, except A or L	0.8 0.36	Stock	**STB6A2A37**	–
	2½ (38.1)	240	1450	34 (5.3)	1	THINBAND–All LA Options, except A or L	1.5 0.68	Stock	**STB6A2J3**	**B6A2JP1**
	3 (76.2)	240/480	1400	27 (4.2)	2	Mica Band–Post (2 on 1)	1.6 0.73	Stock	**B6A3AR1**	–
	3 (76.2)	240	1400	26 (4.0)	1	THINBAND–All LA Options, except A or L	1.6 0.73	Stock	**STB6A3A1**	–
	3 (76.2)	480	1400	26 (4.0)	1	THINBAND–All LA Options, except A or L	1.6 0.73	Stock	**STB6A3A2**	–
6¼ (158.8)	1½ (38.1)	240	850	30 (4.7)	1	THINBAND–All LA Options, except A or L	0.9 0.41	Stock	**STB6E1J10**	–
	1½ (38.1)	480	850	30 (4.7)	1	THINBAND–All LA Options, except A or L	0.9 0.41	Stock	**STB6E1J11**	–
	2 (50.8)	240	1000	27 (4.2)	1	THINBAND–All LA Options, except A or L	1.0 0.46	Stock	**STB6E2A5**	–
	2 (50.8)	480	1000	27 (4.2)	1	THINBAND–All LA Options, except A or L	1.0 0.46	Stock	**STB6E2A6**	–
	3 (76.2)	240/480	1500	29 (4.5)	2	Mica Band–Post (2 on 1)	1.8 0.82	Stock	**B6E3AR1**	–
	3 (76.2)	240	1500	27 (4.2)	1	THINBAND–All LA Options, except A or L	1.8 0.82	Stock	**STB6E3A1**	–
	3 (76.2)	480	1500	27 (4.2)	1	THINBAND–All LA Options, except A or L	1.8 0.82	Stock	**STB6E3A2**	–
6 5/16 (160.3)	3 (76.2)	240/480	1250	25 (3.9)	2	Mica Band–Post Terminals Only w/Strap	1.8 0.82	Stock	**B6F3AP1**	–
	3 (76.2)	240	1250	22 (3.4)	1	THINBAND–All LA Options, except A or L	1.8 0.82	Stock	**STB6F3A1**	–
	3 (76.2)	480	1250	22 (3.4)	1	THINBAND–All LA Options, except A or L	1.8 0.82	Stock	**STB6F3A2**	–
6½ (165.1)	1½ (38.1)	240	900	31 (4.8)	1	THINBAND–All LA Options, except A or L	0.9 0.41	Stock	**STB6J1J1**	**B6J1JP1/2**
	1½ (38.1)	240	950	33 (5.1)	1	THINBAND–All LA Options, except A or L	0.9 0.41	Stock	**STB6J1J2**	**B6J1P3**
	2 (50.8)	240	1000	26 (3.9)	1	THINBAND–All LA Options, except A or L	1.2 0.54	Stock	**STB6J2A1**	**B6J2AP1**
	3 (76.2)	240	1400	24 (3.7)	1	THINBAND–All LA Options, except A or L	1.8 0.82	Stock	**STB6J3A13**	–
	3 (76.2)	480	1400	24 (3.7)	1	THINBAND–All LA Options, except A or L	1.8 0.82	Stock	**STB6J3A14**	–
6⅝ (168.3)	4½ (114.3)	240	2300	26 (4.0)	1	THINBAND–All LA Options, except A or L	2.8 1.27	Stock	**STB6L4J1**	**B6L4JR1**
6¾ (171.5)	1½ (38.1)	240	1000	33 (5.1)	1	THINBAND–All LA Options, except A or L	1.0 0.45	Stock	**STB6N1J1**	**B6N1JP2**
	1½ (38.1)	240	750	25 (3.9)	1	THINBAND–All LA Options, except A or L	1.0 0.45	Stock	**STB6N1J2**	**B6N1JP1**
	1½ (38.1)	240	1150	38 (5.9)	1	THINBAND–All LA Options, except A or L	1.0 0.45	Stock	**STB6N1J3**	**B6N1JP3**
	2 (50.8)	240	1300	32 (5.0)	1	THINBAND–All LA Options, except A or L	1.3 0.59	Stock	**STB6N2A1**	**B6N2AP1/2**
	3 (76.2)	240	2000	33 (5.1)	1	THINBAND–All LA Options, except A or L	2.0 0.90	Stock	**STB6N3A7**	–
	3 (76.2)	480	2000	33 (5.1)	1	THINBAND–All LA Options, except A or L	2.0 0.90	Stock	**STB6N3A8**	–
7 (177.8)	1½ (38.1)	240	950	30 (4.6)	1	THINBAND–All LA Options, except A or L	1.0 0.45	Stock	**STB7A1J1**	**B7A1JP1**
	1½ (38.1)	240	1100	35 (5.4)	1	THINBAND–All LA Options, except A or L	1.0 0.45	Stock	**STB7A1J2**	**B7A1JP2**
	2 (50.8)	240	1100	26 (4.1)	1	THINBAND–All LA Options, except A or L	1.3 0.59	Stock	**STB7A2A16**	–
	2 (50.8)	480	1100	26 (4.1)	1	THINBAND–All LA Options, except A or L	1.3 0.59	Stock	**STB7A2A17**	–
	3 (76.2)	230/460	1650	28 (4.3)	2	Mica Band–Post (2 on 1)	2.0 0.91	Stock	**B7A3AR1**	–
	3 (76.2)	230	1650	26 (4.0)	1	THINBAND–All LA Options, except A or L	2.0 0.91	Stock	**STB7A3A1**	–
	3 (76.2)	460	1650	26 (4.0)	1	THINBAND–All LA Options, except A or L	2.0 0.91	Stock	**STB7A3A2**	–

CONTINUED

① Watt density is above Watlow recommendations at some common molding temperatures.

Band Heaters

THINBAND Mica Barrel and Nozzle

I.D. in (mm)	Width in (mm)	Volts	Watts	Watt Density W/in² (W/cm²)	1 pc. or 2 pc.	Terminals, Leads and Special Features	Approx. Net. Wt. lbs (kg)	Avail.	Code No.	Former Code No.
7¼ (184.1)	1½ (38.1)	240	1000	30 (4.7)	1	THINBAND–All LA Options, except A or L	1.1 0.50	Stock	**STB7E1J9**	–
	1½ (38.1)	480	1000	30 (4.7)	1	THINBAND–All LA Options, except A or L	1.1 0.50	Stock	**STB7E1J10**	–
	2 (50.8)	240	1200	27 (4.2)	1	THINBAND–All LA Options, except A or L	1.5 0.65	Stock	**STB7E2A10**	–
	2 (50.8)	480	1200	27 (4.2)	1	THINBAND–All LA Options, except A or L	1.5 0.65	Stock	**STB7E2A11**	–
	3 (76.2)	240	1800	27 (4.2)	1	THINBAND–All LA Options, except A or L	2.2 1.00	Stock	**STB7E3A3**	–
	3 (76.2)	480	1800	27 (4.2)	1	THINBAND–All LA Options, except A or L	2.2 1.00	Stock	**STB7E3A4**	–
7½ (190.5)	1 (25.4)	120/240	700	35 (5.4)	2	Mica Band–Post Terminals Only w/Strap	1.0 0.45	Stock	**B7J1AP1**	–
	1½ (38.1)	240	1000	30 (4.6)	1	THINBAND–All LA Options, except A or L	1.1 0.50	Stock	**STB7J1J1**	**B7J1JP1**
	1½ (38.1)	240	1200	35 (5.4)	1	THINBAND–All LA Options, except A or L	1.1 0.50	Stock	**STB7J1J2**	**B7J1JP2**
	2 (50.8)	240	1200	27 (4.2)	1	THINBAND–All LA Options, except A or L	2.0 0.90	Stock	**STB7J2A13**	–
	2 (50.8)	480	1200	27 (4.2)	1	THINBAND–All LA Options, except A or L	2.0 0.90	Stock	**STB7J2A14**	–
	3 (76.2)	240/480	1800	28 (4.3)	2	Mica Band–Post (2 on 1)	2.4 1.08	Stock	**B7J3AR1**	–
	3 (76.2)	240	1800	27 (4.2)	1	THINBAND–All LA Options, except A or L	2.4 1.08	Stock	**STB7J3A1**	–
	3 (76.2)	480	1800	27 (4.2)	1	THINBAND–All LA Options, except A or L	2.4 1.08	Stock	**STB7J3A2**	–
7¾ (196.8)	1½ (38.1)	240	1000	29 (4.5)	1	THINBAND–All LA Options, except A or L	1.2 0.58	Stock	**STB7N1J10**	–
	1½ (38.1)	480	1000	29 (4.5)	1	THINBAND–All LA Options, except A or L	1.2 0.58	Stock	**STB7N1J11**	–
	2 (50.8)	240	1300	28 (4.4)	1	THINBAND–All LA Options, except A or L	2.1 0.95	Stock	**STB7N2A2**	–
	2 (50.8)	480	1300	28 (4.4)	1	THINBAND–All LA Options, except A or L	2.1 0.95	Stock	**STB7N2A3**	–
	3 (76.2)	240	2000	29 (4.5)	1	THINBAND–All LA Options, except A or L	2.3 1.10	Stock	**STB7N3A22**	–
	3 (76.2)	480	2000	29 (4.5)	1	THINBAND–All LA Options, except A or L	2.3 1.10	Stock	**STB7N3A23**	–
8 (203.2)	1½ (38.1)	240	950	26 (4.0)	1	THINBAND–All LA Options, except A or L	1.1 0.50	Stock	**STB8A1J1**	**B8A1JP1**
	1½ (38.1)	240/480	1200	36 (5.6)	2	Mica Band–Post Terminals Only w/Strap	1.1 0.50	Stock	**B8A1JP3**	–
	1½ (38.1)	240	1200	33 (5.1)	1	THINBAND–All LA Options, except A or L	1.1 0.50	Stock	**STB8A1J2**	**B8A1JP2**
	1½ (38.1)	480	1200	33 (5.1)	1	THINBAND–All LA Options, except A or L	1.1 0.50	Stock	**STB8A1J3**	–
	1½ (38.1)	240	1400	39 ① (6.0)	1	THINBAND–All LA Options, except A or L	1.1 0.50	Stock	**STB8A1J4**	**B8A1JP4**
	2 (50.8)	240	1500	30 (4.7)	1	THINBAND–All LA Options, except A or L	1.5 0.65	Stock	**STB8A2A20**	–
	2 (50.8)	480	1500	30 (4.7)	1	THINBAND–All LA Options, except A or L	1.5 0.65	Stock	**STB8A2A21**	–
	3 (76.2)	240/480	2250	33 (5.1)	2	Mica Band–Post (2 on 1)	2.6 1.18	Stock	**B8A3AR1**	–
	3 (76.2)	240	2250	31 (4.8)	1	THINBAND–All LA Options, except A or L	2.6 1.18	Stock	**STB8A3A1**	–
	3 (76.2)	480	2250	31 (4.8)	1	THINBAND–All LA Options, except A or L	2.6 1.18	Stock	**STB8A3A2**	–
8¼ (209.6)	1½ (38.1)	240	1100	30 (4.7)	1	THINBAND–All LA Options, except A or L	1.2 0.58	Stock	**STB8E1J5**	–
	1½ (38.1)	480	1100	30 (4.7)	1	THINBAND–All LA Options, except A or L	1.2 0.58	Stock	**STB8E1J6**	–
	2 (50.8)	240	1500	30 (4.7)	1	THINBAND–All LA Options, except A or L	2.3 1.10	Stock	**STB8E2A8**	–
	2 (50.8)	480	1500	30 (4.7)	1	THINBAND–All LA Options, except A or L	2.3 1.10	Stock	**STB8E2A9**	–
	3 (76.2)	240	2000	27 (4.2)	1	THINBAND–All LA Options, except A or L	2.6 1.25	Stock	**STB8E3A10**	–
	3 (76.2)	480	2000	27 (4.2)	1	THINBAND–All LA Options, except A or L	2.6 1.25	Stock	**STB8E3A11**	–
	4 (101.6)	240/480	3000	31 (4.8)	2	Mica Band–Post Terminals Only w/Strap	3.0 1.36	Stock	**B8E4AP1**	–
	4 (101.6)	240	3000	30 (4.6)	1	THINBAND–All LA Options, except A or L	3.0 1.36	Stock	**STB8E4A1**	–
	4 (101.6)	480	3000	30 (4.6)	1	THINBAND–All LA Options, except A or L	3.0 1.36	Stock	**STB8E4A2**	–
8½ (215.9)	1½ (38.1)	240	1200	31 (4.8)	1	THINBAND–All LA Options, except A or L	1.2 0.55	Stock	**STB8J1J1**	**B8JIJP1**
	1½ (38.1)	480	1200	30 (4.7)	1	THINBAND–All LA Options, except A or L	1.2 0.55	Stock	**STB8J1J21**	–
	2 (50.8)	240	1600	31 (4.8)	1	THINBAND–All LA Options, except A or L	1.6 0.73	Stock	**STB8J2A1**	**B8J2AP1**
	2 (50.8)	480	1600	30 (4.7)	1	THINBAND–All LA Options, except A or L	1.6 0.73	Stock	**STB8J2A12**	–
	3 (76.2)	240	2500	32 (5.0)	1	THINBAND-Post Terminals Only	2.4 1.10	Stock	**STB8J3A14**	–

CONTINUED

① Watt density is above Watlow recommendations at some common molding temperatures.

Band Heaters

THINBAND Mica Barrel and Nozzle

I.D. in (mm)	Width in (mm)	Volts	Watts	Watt Density W/in² (W/cm²)	1 pc. or 2 pc.	Terminals, Leads and Special Features	Approx. Net. Wt. lbs (kg)	Avail.	Code No.	Former Code No.
8½ (215.9)	3 (76.2)	480	2500	32 (5.0)	1	THINBAND–All LA Options, except A or L	2.4 1.10	Stock	**STB8J3A15**	–
8¾ (222.3)	1½ (38.1)	240	1200	30 (4.7)	1	THINBAND–All LA Options, except A or L	1.3 0.61	Stock	**STB8N1J10**	–
	1½ (38.1)	480	1200	30 (4.7)	1	THINBAND–All LA Options, except A or L	1.3 0.61	Stock	**STB8N1J11**	–
	2 (50.8)	240	1600	30 (4.7)	1	THINBAND–All LA Options, except A or L	1.5 0.68	Stock	**STB8N2A10**	–
	2 (50.8)	480	1600	30 (4.7)	1	THINBAND–All LA Options, except A or L	1.5 0.68	Stock	**STB8N2A11**	–
	3 (76.2)	240/480	2000	27 (4.2)	2	Mica Band–Post (2 on 1)	2.7 1.22	Stock	**B8N3AR1**	–
	3 (76.2)	240	2000	25 (3.9)	1	THINBAND–All LA Options, except A or L	2.7 1.22	Stock	**STB8N3A1**	–
	3 (76.2)	480	2000	25 (3.9)	1	THINBAND–All LA Options, except A or L	2.7 1.22	Stock	**STB8N3A2**	–
9 (228.6)	1½ (38.1)	240	1300	32 (5.0)	1	THINBAND–All LA Options, except A or L	1.3 0.59	Stock	**STB9A1J1**	**B9A1JP1**
	1½ (38.1)	240/480	1500	40 ① (6.2)	2	Mica Band–Post Terminals Only w/Strap	1.3 0.59	Stock	**B9A1JP3**	–
	1½ (38.1)	240	1500	37 ① (5.7)	1	THINBAND–All LA Options, except A or L	1.3 0.59	Stock	**STB9A1J2**	**B9A1JP2**
	1½ (38.1)	480	1500	37 ① (5.7)	1	THINBAND–All LA Options, except A or L	1.3 0.59	Stock	**STB9A1J3**	–
	2 (50.8)	240	1800	33 (5.1)	1	THINBAND–All LA Options, except A or L	1.5 0.68	Stock	**STB9A2A1**	**B9A2AP1**
	2 (50.8)	480	1800	33 (5.1)	1	THINBAND–All LA Options, except A or L	1.5 0.68	Stock	**STB9A2A20**	–
	3 (76.2)	240	2500	30 (4.7)	1	THINBAND-Post Terminals Only	2.6 1.18	Stock	**STB9A3A18**	–
	3 (76.2)	480	2500	30 (4.7)	1	THINBAND–All LA Options, except A or L	2.6 1.18	Stock	**STB9A3A19**	–
9½ (244.3)	2 (50.8)	240	1800	32 (5.0)	1	THINBAND–All LA Options, except A or L	1.7 0.77	Stock	**STB9J2A1**	**B9J2AP1**
	3 (76.2)	240/480	2000	24 (3.7)	2	Mica Band-Post (2 on 1)	2.8 1.27	Stock	**B9J3AR1**	–
	3 (76.2)	240	2000	23 (3.6)	1	THINBAND–All LA Options, except A or L	2.8 1.27	Stock	**STB9J3A1**	–
	3 (76.2)	480	2000	23 (3.6)	1	THINBAND–All LA Options, except A or L	2.8 1.27	Stock	**STB9J3A2**	–
9⅝ (244.5)	3 (76.2)	240/480	3000	37	2	Mica Band–Post Terminals Only w/Strap	2.7 1.22	Stock	**B9L3AP2**	–
	3 (76.2)	480	3000	34 (5.3)	1	THINBAND–All LA Options, except A or L	2.8 1.27	Stock	**STB9L3A4**	–
9¾ (247.7)	2 (50.8)	240	2000	34 (5.3)	1	THINBAND–All LA Options, except A or L	1.9 0.86	Stock	**STB9N2A1**	**B9N2AP1**
10 (254.0)	1½ (38.1)	240	1400	31 (4.8)	1	THINBAND–All LA Options, except A or L	1.5 0.68	Stock	**STB10A1J1**	**B10A1JP1**
10¼ (260.4)	4 (101.6)	240/480	3000	25 (3.9)	2	Mica Band–Post Terminals Only w/Strap	3.9 1.77	Stock	**B10E4AP1**	–
11 (279.4)	1½ (38.1)	240	1600	32 (5.0)	1	THINBAND–All LA Options, except A or L	1.7 0.77	Stock	**STB11A1J1**	**B11A1JP1**
	2 (50.8)	240	2000	30 (4.6)	1	THINBAND–All LA Options, except A or L	2.1 0.95	Stock	**STB11A2A1**	**B11A2AP1**
12 (304.8)	2 (50.8)	240/480	2300	33 (5.1)	2	Mica Band–Post Terminals Only w/Strap	2.3 1.04	Stock	**B12A2AP2**	–

① Watt density is above Watlow recommendations at some common molding temperatures.

How to Order

To order stock THINBAND or standard mica band, specify:

- Watlow code number
- Termination type(s)
- Lead lengths
- Quantity

Note:

- Post terminals are provided unless otherwise specified.
- On Types A, L and K, 12 inches (305 mm) in lead length will be supplied unless otherwise specified.
- On Types E, C, F and H, 14 inches (356 mm) in lead length will be supplied unless otherwise specified.
- On Types A, E, C, F and H, leads will be two inches (51 mm) longer than the protective covering unless otherwise specified.
- All LA termination options will be 180 degrees from the gap unless otherwise specified.

  Stock LA termination options can only be supplied with LA termination 180 degrees from the gap.
- For THINBAND heaters higher than 8.5 amps, consult Watlow.

Availability

- **Stock:** Same day shipment
- **Made-to-Order:** If our stock units do not meet your application needs, Watlow can manufacture to your special requirements. Please consult your sales engineer or authorized distributor for price and delivery of made-to-order items.

Band Heaters

Special Mica Barrel and Nozzle

For over 75 years, Watlow has been solving complex and unique application problems with standard mica barrel and nozzle heaters. Watlow is continuously improving design and application knowledge through engineering expertise and experience with numerous OEM and end-user applications.

This has resulted in the development of many specialty variations in construction resulting in the best heat solutions. This catalog contains a sampling of what can be done. Please contact a local Watlow sales engineer for custom applications.

Performance Capabilities

- Sheath temperatures to 900°F (480°C)
- Watt densities to 55 W/in^2 (8.5 W/cm^2)

Features and Benefits

- **UL® component recognition** available for applications up to 900°F (480°C) sheath temperature.
- **Patented clamping strap** assures efficient heat transfer.
- **Low mass design** allows fast heat-up and quick response.
- **Design variations** provide user convenience and heater protection.

Applications

- Extruders
- Blown film dies
- Injection molding machines
- Other cylinder heating applications

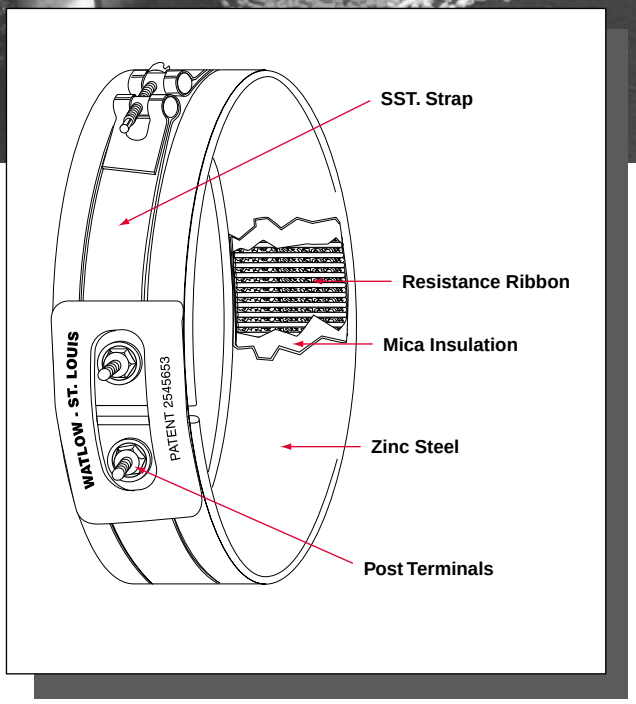

UL® is a registered trademark of Underwriter's Laboratories, Inc.

Band Heaters

Special Mica Barrel and Nozzle

Applications and Technical Data

Operating Factors

Use as a low watt density rating as the application permits. A close match of the heat supplied to the actual requirements will reduce temperature overshoot, reduce cycling and increase the life of any band heater used.

Calculate the **safe maximum wattage** for the heater using:

Heated Area x Maximum Watt Density

Calculate the **heated area** of the band heater by subtracting the no-heat area from the total area in contact with the cylinder (3.14 x I.D. x width). Subtract the no-heat area at the terminals (from table) and any additional no-heat area caused by holes, slots or oversize gaps.

Determine the maximum watt density of the heater from the graph on this page. The curves are based on narrow heaters mounted on a smooth, steel cylinder. Apply the necessary correction factors:

- For heaters 2¼ inches (57 mm) to five inches wide (127 mm), multiply watt density by 0.8.
- For high expansion cylinders (aluminum or brass), reduce the watt density by 3 W/in^2 (0.46 W/cm^2).
- For heaters 2¼ inches to 5 inches wide installed on a high expansion cylinder, reduce watt density by a total of 3 W/in^2 (0.46 W/cm^2) only.
- For regular cylinder surfaces other than smooth, machined finish, reduce watt density by 3 W/in^2 (0.46 W/cm^2).
- For heaters that will be insulated or enclosed, contact Watlow for specific watt densities.

No-Heat Area for Special Mica Band (Post Terminals)

Heater Type	Heater Size		No-Heat Area at Terminals in (mm)
	Diameter in (mm)	Width in (mm)	
One Piece	Less than 2 (50.8)	Up to 6 (152.4)	1 (25.4) x width
	2 (50.8) or more	Up to 3 (76.2)	1½ (38.1) x width
		More than 3 (76.2)	1 (25.4) x width
Two Piece	3 (76.2) or more	Up to 3 (76.2)	3 (76.2) x width
		More than 3 (76.2)	2 (50.8) x width

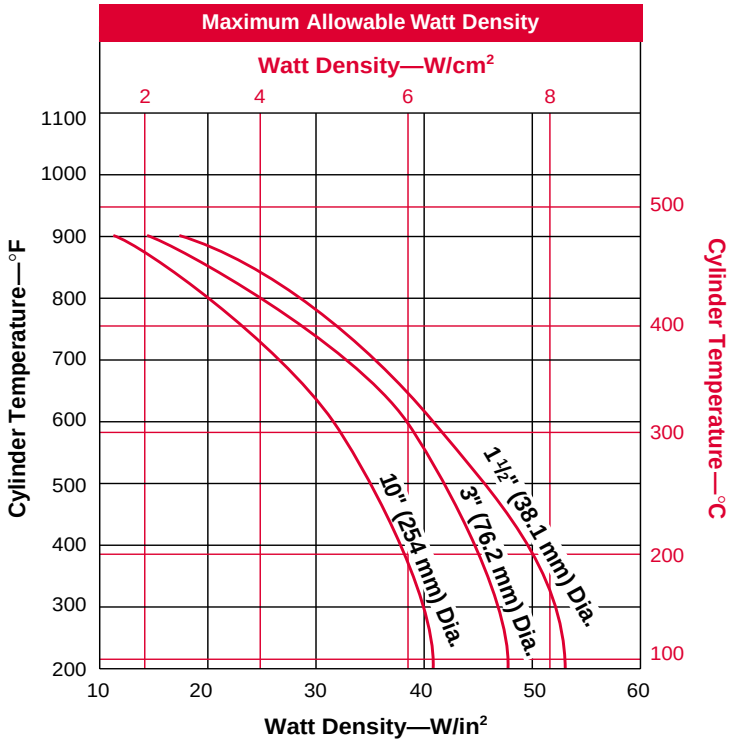

Band Heaters

Special Mica Barrel and Nozzle

Physical Limitations of Variations

Check the table to be certain the variations and lead arrangements being ordered are available on the heater size required. If you need to exceed any limitations please contact a Watlow representative.

Physical Limitations of Variations

Heater Type	Diameter		Width	
	Min. inch (mm)	Max. inch (mm)	Min. inch (mm)	Max. inch (mm)
1 pc.	1 5/16 (33.3)	22 (559)	5/8 (15.8)	15 (381)
2 pc.	3 (76.2)	44 (1117)	5/8 (15.8)	15 (381)
Expandable:				
Narrow	1 3/4 (44.4)	— —	1 (25.4)	3 (76.2)
Wide	1 3/4 (44.4)	— —	2 (50.8)	6 (152.4)
O.D. heater				
1 pc.	3 (76.2)	22 (559)	1 (25.4)	6 (76.2)
2 pc.	3 (76.2)	44 (1117)	1 (25.4)	6 (76.2)
Type K leads	3/4 (19.05)	— —	5/8 (15.8)	15 (381)
Type L leads	3/4 (19.05)	— —	3/4 (19.05)	15 (381)
Type E leads	1 1/2 (38.1)	22 (559)	3/4 (19.05)	15 (381)
Type F leads	1 1/2 (38.1)	22 (559)	3/4 (19.05)	15 (381)
Type H leads	1 1/2 (38.1)	22 (559)	3/4 (19.05)	15 (381)
Type B leads	1 1/2 (38.1)	22 (559)	3/4 (19.05)	15 (381)
Post terminals	1 5/16 (33.3)	— —	1 (25.4)	15 (381)
Type A leads	3/4 (19)	— —	3/4 (19)	15 (381)
Type C leads	1 5/16 (33.3)	— —	1 (25.4)	15 (381)
Terminal box	3 1/2 (88.9)	— —	1 3/8 (34.9)	15 (381)
Plug w/bracket	3 (76.2)	— —	3 1/2 (88.9)	15 (381)
3-phase	— —	— —	3 (76.2)	15 (381)
European plug				
1 pc. vertical	1 5/16 (33.3)	22 (559)	1 (25.4)	15 (381)
1 pc. horizontal	3 (76.2)	22 (559)	2 (50.8)	15 (381)
2 pc. vertical	3 (76.2)	44 (1117)	1 (25.4)	15 (381)
2 pc. horizontal	3 (76.2)	44 (1117)	2 (50.8)	15 (381)
HV Wedge-Lok	1 (2.5.4)	3 (76.2)	1 (25.4)	6 (76.2)
Clamping tabs	2 (50.8)	— —	1 (25.4)	15 (381)
Welded barrel nuts				
1 pc.	2 (50.8)	22 (559)	1 (25.4)	15 (381)
2 pc.	4 (101.6)	44 (1117)	1 (25.4)	15 (381)

Note: Some combinations of maximum and minimums cannot occur on the same heater.

Standard gap is 1/4 inch (6.35 mm)

Variations

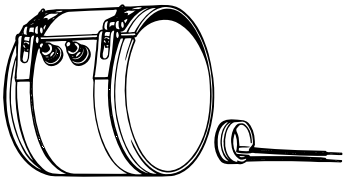

Different Widths

The 1 1/2 inch (38 mm) wide heater is the most efficient due to maximum clamping action. Heaters are available in widths from 5/8 inch (16 mm) to 15 inches (381 mm). Multiple clamping straps are provided for heaters more than three inches (76 mm) wide.

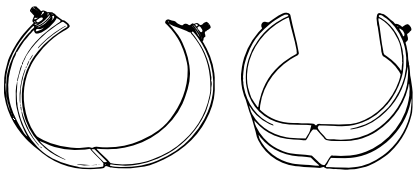

Expandable Heaters

Heaters three inches (76 mm) wide or less are constructed with a notched sheath. Heaters wider than three inches are constructed with an expansion seam. These heaters are shipped open and should not be closed and reopened more than twice. To order, specify **expandable.**

Band Heaters

Special Mica Barrel and Nozzle

Variations

Continued

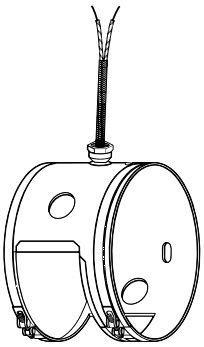

Holes and Notches

An economical way to provide access for instrumentation is to specify an oversize gap between the heater ends. Holes and notches in the sheath should be specified only when all the cylinder surface adjacent to the hole or notch must be heated. When required holes may be provided in nearly any location as long as there is at least one inch (25 mm) between the hole and one side of the heater. Standard hole sizes up to two inches (51 mm) diameter. For proper hole and/or notch location, a **dimensional drawing is required.**

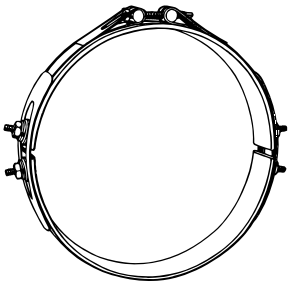

Two Piece Band Heaters

Two-piece construction is available on heaters three inches (76 mm) or greater in diameter. Heaters three inches wide or less with post terminals have one terminal on each end. Heaters over three inches wide with post terminals have the two terminals side by side on one end. On two-piece units with leads, also specify the power supply voltage. The power supply voltage is the voltage to which the heater will be wired. For example, a two-piece band that is 240V~(ac) per half may be wired in series to a 480V~(ac) power supply. In this case the band heater lead wire insulation must be rated for 480V~(ac). To order, specify **two piece band heater,** with **volts** and **watts per half** and **power supply voltage**.

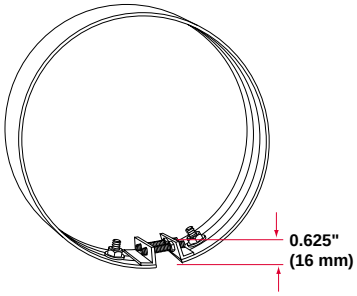

Outside Diameter

This variation is specially designed and constructed to heat the inside diameter of cylinders, i.e., large diameter blown film dies. All the terminations and mounting hardware are located on the I.D. of the heater.

Consult Watlow for available sizes and terminations. Option available as standard mica construction only. To order, specify **outside diameter** heater.

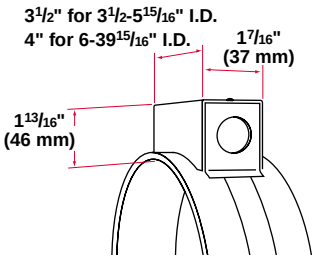

Metallic Terminal Box

Terminal boxes are attached to the heater to cover the terminals for an added safety feature. Conduit may be attached to the box through ⅞ inch (22 mm) diameter holes in the ends of the box. Terminal box is available on two piece heaters. When ordering, specify **terminal box.**

See page 49 for minimum/maximum dimensional requirements.

Band Heaters

Special Mica Barrel and Nozzle

Variations

Continued

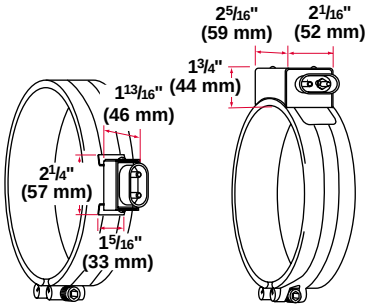

Vertical **Horizontal**

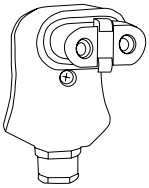

Right Angle

Code # N6027AF049

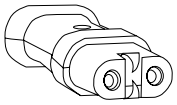

Straight

Code # N6027ZZ028

High Temperature "Quick Disconnect" European Style Plugs

These plugs provide the simplest and safest way to apply power to band heaters. The combination of high temperature male and female quick disconnect plug assemblies eliminates all live exposed terminals and electrical wiring that can be a potential hazard to employees or machine. Maximum amps 15 at 240V~(ac), maximum volts 240. To order, specify **vertical** or **horizontal** European plug.

High Temperature "Quick Disconnect" European Style Female Adaptors

Available as an accessory item that must be used in conjunction with high temperature "quick disconnect" European style plugs. Specify code number **N6027AF049** or **N6027ZZ028** and quantity.

Ceramic Terminal Covers

Stock Option

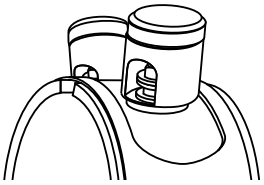

Code # Z-4918

A convenient and economic way to insulate post terminals. Sized for standard length posts. 10-24 screw thread size. These are supplied as an accessory item and shipped separately. Specify **Z-4918** and quantity.

Special Construction Variations

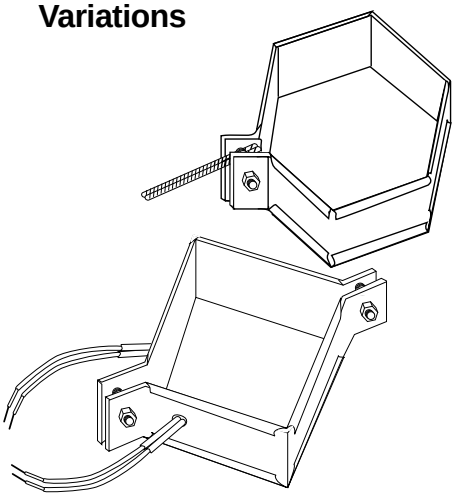

Square, Rectangular and Hex Bands

Square and rectangular heaters are made in either one or two-piece construction. These units are ideal for heating dies on plastic extruders, or the barrels of twin screw extruders. Hex-shaped heaters are commonly used on the hex shaped portion of the nozzle injection molding machines. Hex-shaped heaters are made to exact customer specifications. To order, specify **square** or **rectangular** heaters. A dimensional drawing is required.

See page 49 for minimum/maximum dimensional requirements.

Special Mica Barrel and Nozzle

Special Construction Variations

Continued

Square, Rectangular and Hex Bands (continued)

Clamping Styles

The preferred clamping style is illustrated in Figure 1 showing bent-up flange clamping. This clamping style applies a uniform clamping force at the corners.

Figure 2 shows bent-up flanges or built-in strapping bracket at the side.

The least preferred clamping style is shown in Figure 3. The one-piece heater does not apply an uniform clamping force.

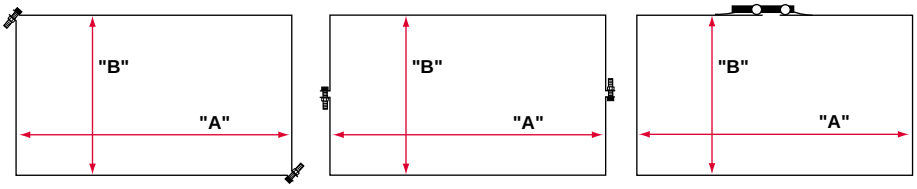

Figure 1 Figure 2 Figure 3

Hinged Two-Piece Band

The hinged, two-piece band heater is connected with a reinforced hinge. It can be opened and closed as often as necessary resulting in easy installation and removal.

To order, specify **hinged two-piece band** and watts and volts per each half.

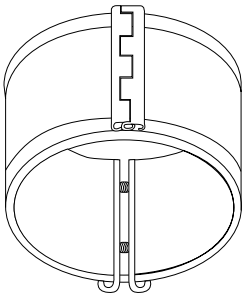

Thermocouple Coupling

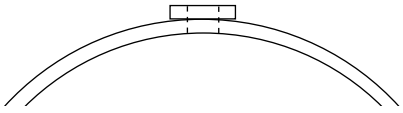

The thermocouple coupling simplifies the installation of an external thermocouple with a threaded fitting. The standard location for the coupling is 90 degrees from the gap.

Standard bushing sizes available are:

NPT Size	Depth	Height
½ - 27	9/16"	5/8"
¼ - 20	3/4"	11/16"
3/8 - 18	7/8"	5/8"

To order, specify **thermocouple coupling**.

Bayonet Adaptor

The bayonet adaptor simplifies the installation of an external thermocouple with a bayonet adaptor. The standard location for the adaptor is 90 degrees from the gap. To order, specify **bayonet adaptor**.

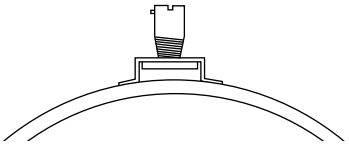

Band Heaters

Special Mica Barrel and Nozzle

Special Construction Variations

Continued

Cone Shapes

Cone shaped heaters are ideal for applications where heat is required for hoppers or funnels. The preferred method of attachment is with bent-up flange clamping. Cone shaped heaters are made to exact customer specifications.

To order, specify **cone shape adapter**. A dimensional drawing is required.

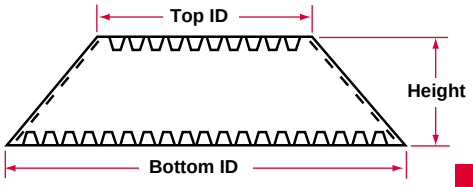

Clamping Variations

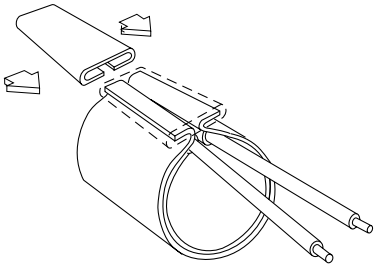

HV Wedge-Lok

Designed to provide excellent clamping where mounting space is limited. Available with Type A and L leads only. Clearance from I.D. of the heater to the outside edge of the Wedge-Lok is 5⁄16 inch (8 mm) nominal. Available on certain sizes from stock. To order, specify **HV Wedge-Lok.**

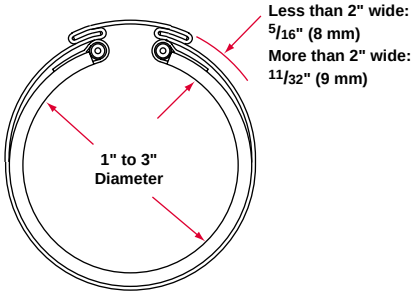

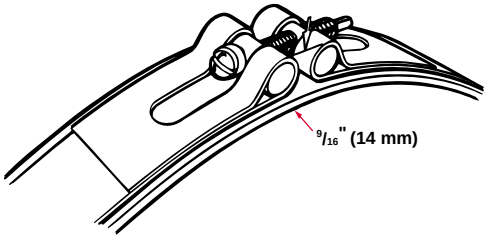

Standard and Low-Profile Clamping Strap

The standard clamping strap requires 9⁄16 inch (14 mm) clearance above the heated surface, at the barrel nuts. When clearance is limited, smaller barrel nuts can be used which require only ⅜ inch (9 mm) clearance. The clearance required by the clamping screw depends on the screw length and the diameter of the heater. The low-profile clamping strap is standard on units less than 1⅜ inches (45 mm) wide and utilizes a ½ inch (13 mm) wide strap. Consult Watlow for more information. To order, specify **low-profile clamping strap.**

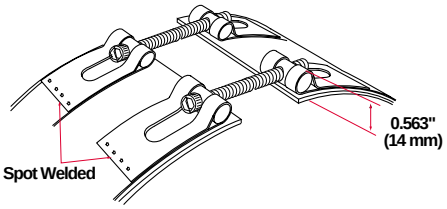

Welded Barrel Nuts

An ideal way to provide access for instrumentation is to specify an oversized gap between the heater ends. If the clamp strap interferes with the positioning of the instrumentation device, welded barrel nuts are recommended. Maximum gap is one inch (25 mm) Specify **welded barrel nuts** and **gap dimension** when ordering.

See page 49 for minimum/maximum dimensional requirements.

Special Mica Barrel and Nozzle

Clamping Variations

Continued

Non-Stock Option

Clamping Tabs

Tabs—or lock-up flanges—are available. However, the special mica band heater and strap design provides superior clamping and improved heat transfer and should be used whenever possible. To order, specify **clamping tabs**.

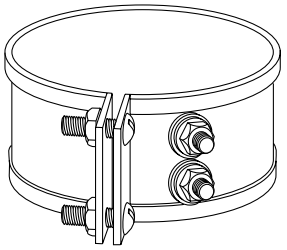

Clamping Pads

Clamping pads have a hole to allow easy fastening to machine barrel. Clamping pads are used when an obstruction hinders a standard clamping strap from fitting completely around the machine barrel.

To order, specify **clamping pads** and **degrees coverage**.

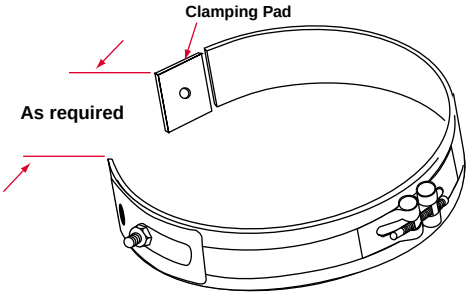

Termination Variations

Post Terminal Options

Standard post terminals have a threaded length of 7⁄16 inch (11 mm) and require ¾ inch (19 mm) clearance from the cylinder. Terminals with 11⁄16 inch (17 mm) threaded lengths are available that require one inch of clearance. Button terminals require only 7⁄16 inch (11 mm) clearance. Maximum amperage for post terminals is 35 amps. To order, specify **standard, long** or **button** terminals.

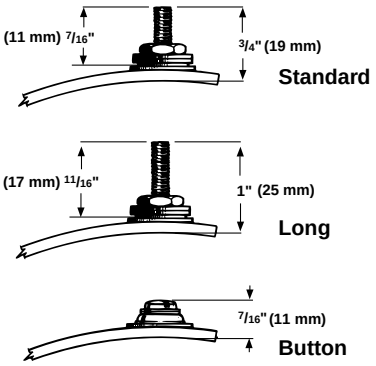

Three Terminal Construction

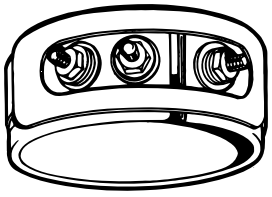

A third terminal can be added to provide dual voltage or three-heat operation. Or, it can be connected to the sheath for easy grounding.

Standard terminal location on heaters three inches (76 mm) wide or less is one terminal at each end of the heater centered on the width. On heaters three inches wide or wider, the terminals are located side-by-side on one end. Special terminal locations are available. To order, specify **dual voltage** or **three-heat operation.**

Band Heaters

Special Mica Barrel and Nozzle

Termination Variations

Continued

Heaters rated at less than 250 volts use UL® approved lead insulation for operations to 482˚F (250˚C) as standard. Lead insulation UL® rated for operation to 850˚F (450˚C) may be required in high temperature applications where the leads are shrouded or enclosed with the heater. All heaters rated at more than 250V~(ac) use this wire.

Type B

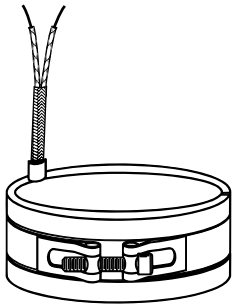

Two fiberglass-insulated lead wires exit in a single metal braid for good abrasion protection, lead flexibility and wiring convenience. Leads are two inches (51 mm) longer than braid. To order, specify **Type B.**

Type C

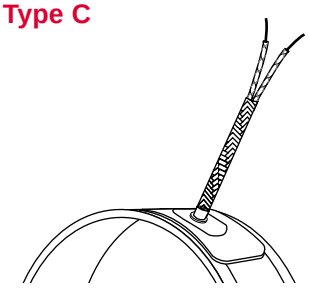

Two fiberglass lead wires exit a single tightly woven metal braid for good abrasion protection, lead flexibility and wiring convenience. Leads are two inches (51 mm) longer than the braid. To order, specify **Type C** and **length**.

Type E

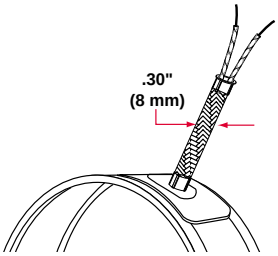

Loose metal braid encloses two fiberglass leads for good abrasion protection, lead flexibility and wiring convenience. Leads are two inches (51 mm) longer than the braid. To order, specify **Type E** and **length**.

Type F

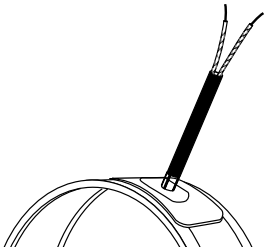

Loose fiberglass sleeving encloses two fiberglass leads for additional insulation protection where high temperature or minor abrasion is present. Leads are two inches (51 mm) longer than the sleeving. To order, specify **Type F** and **length**.

Type H

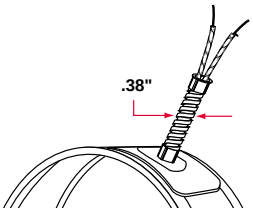

A stainless steel, flexible conduit encloses the leads for superior mechanical protection where lead abrasion is a particular problem. Leads are two inches (51 mm) longer than the conduit. To order, specify **Type H** and **length**.

Type K

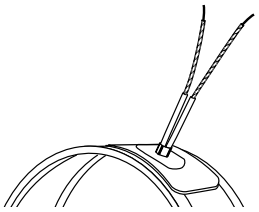

Flexible lead wires exit vertically from the heater. These leads can be bent adjacent to the heater for a quick and easy connection. To order, specify **Type K** and **length**.

Special Mica Barrel and Nozzle

Termination Variations

Continued

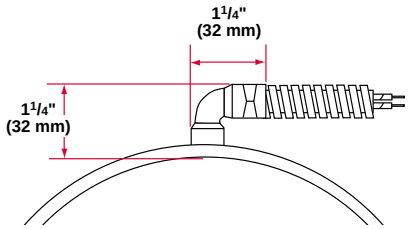

Right Angle Armor Cable

Armor cable provides superior protection to lead wires where abrasion can cause damage. The standard leads are 12 inches (304.8 mm) of armor cable over 14 inches (355.6 mm) of flexible leads. Right angle armor cable is available on any clamping or construction variation.

To order, specify **right angle armor cable**.

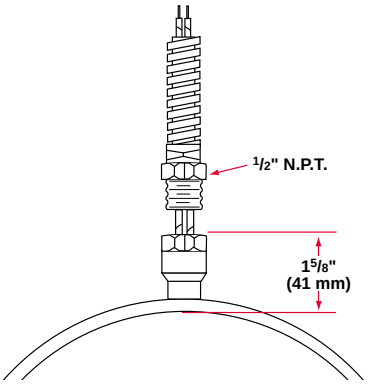

Removable Armor Cable

Removable armor cable is recommended on applications where removable armor is required. It is available on any clamping or construction variation. The fitting will accept the standard armor cable connector. The standard flexible leads are 14 inches (355.6 mm).

To order, specify **removable armor cable**.

Installation Procedures

1. Install heaters over a clean surface.
2. Install clamp straps, tightening until screw cannot be tightened additionally. On heaters with multiple straps, alternately tighten each strap until no additional tightening occurs.
3. To insure that the heater is properly seated on the barrel, it is advisable to tap around the circumference of heater with a soft mallet. This will result in a final conforming of the heater to the cylinder. Generally after this is done, operators can get an additional turn or two on the clamp screw. Each screw should have an ultimate torque value as in below chart.
4. When installing terminal lugs, torque the top nut to 12 in-lbs. The bottom nut should be held by a wrench when tightening the top nut.
5. After the machine has been run for its initial heat up, it is advisable to retighten the clamping bands.

Note: This retightening must be done when the heaters are cold. If the heater becomes loose due to normal operating and cycling the strap can be retightened, although frequent adjustments are not advisable. It is advisable to check bands for tightness every three to four months.

Clamp Strap Torque Specifications

Strap Width inch	(mm)	Strap Screw	Allen Type	Pan Head Type
7/8	(22.2)	10 - 24	60 - 75 lb/in	30 - 35 lb/in
5/8	(15.8)	10 - 24	30 - 35 lb/in	30 - 35 lb/in
1/2	(12.7)	8 - 32	25 lb/in	25 lb/in

Cable Heaters

Versatile, Standard Cable Heaters

The versatile Watlow cable heater can be formed to a variety of shapes as dictated by its many applications. Cable heaters are small diameter, high performance units, fully annealed and readily bent to a multitude of configurations.

The heater can be formed into a compact coiled nozzle heater for use on plastic injection molding equipment supplying a full 360 degrees of heat with optional distributed wattage. A straight cable can snake through a sealing bar in packaging equipment. Flat spiral configurations are used in semiconductor manufacturing while a star wound cable is used for air and gas heating.

Different applications require different construction methods, including one, two, three or four resistance wires; parallel coil or straight wire; drawn or swaged sheaths; with or without internal thermocouples; leads exiting from one or both ends, and round, rectangular or square cable sheaths.

Whatever the application, the Watlow cable heater can be shaped to fit your application needs.

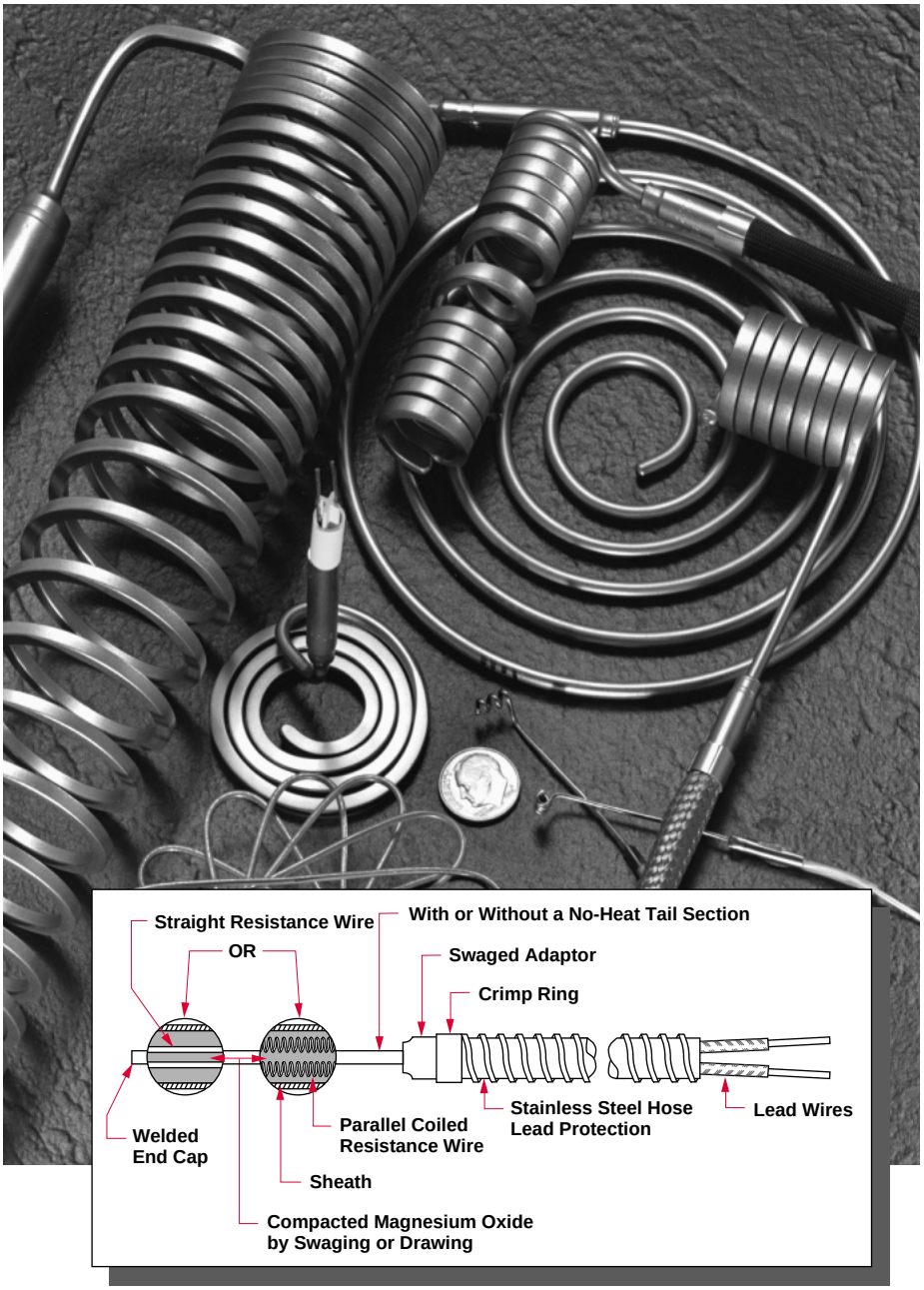

Performance Capabilities

- Continuous operating temperatures to 1200°F (650°C) with intermittent operating periods achieving up to 1500°F (815°C). Dependant on type of element wire used.
- Sheath watt densities on the cable to 30 W/in^2 (4.65 W/cm^2), and as high as 75 W/in^2 (11.62 W/cm^2) within factory approved conditions.

Features and Benefits

- **High ductility** allows the heater to be cold-formed into almost any shape.
- **The heater's low mass** allows for quick response to both heating and cooling.
- **The heater can be isolated or sealed from the process environment** with optional compression fittings or HTF adaptor seals. Cable heaters are constructed with no open seams. Optional testing is available to guarantee the integrity of all surfaces and seams.
- **Standard 304 stainless steel,** or optional 316L stainless steel or Inconel® 600, provide high temperature corrosion and oxidation resistance along with ideal thermal expansion properties.
- **The heater sheath can be brazed** allowing the permanent attachment of mounted fittings to the heater. Consult factory for additional information.

Inconel® is a registered trademark of Special Metals Corporation.

Cable Heaters

Versatile, Standard Cable Heaters

Features

Continued

- **Ranging from 0.040 inch (1 mm) to 0.188 inch (5 mm) diameter,** the cable heater packs a lot of heat into a tiny space. Lengths range from ¾ inch (19 mm) to over 70 feet (2134 cm).
- **Internal construction options** allow internal thermocouples and no-heat sections. (Not available in all sizes.)
- **Cable heaters can operate in unusual environments,** including cryogenic and sub-freezing temperatures, high vacuum, and gaseous and liquid immersion conditions.

Applications

- Plastic injection molding nozzles
- Semiconductor manufacturing and wafer processing
- Hot metal forming dies and punches
- Sealing and cutting bars
- Medical, analytical and scientific instruments
- Restaurant and food processing equipment
- Cast-in heaters
- Laminating and printing presses
- Air heating
- Textile manufacturing
- Heating in a vacuum environment

Electrical Data and Coiling Limits

Sheath Diameter		Maximum Voltage	Surface Area Per Linear Foot		Minimum Bend Radius		Minimum Coiled Inside Diameter	
inches	(mm)		in	(cm)	in	(mm)	in	(mm)
0.040 ± 0.002	(1.016 ± 0.051)	48	1.51	(9.743)	1/16	(1.588)	⅛	(3.175)
0.062 ± 0.002	(1.575 ± 0.051)	120	2.34	(15.098)	⅛	(3.175)	¼	(6.350)
0.058 ± 0.002	(1.473 ± 0.051)	240	2.18	(14.065)	⅛	(3.175)	¼	(6.350)
0.094 + 0.002 - 0.003	(2.388 + 0.051 - 0.076)	240	3.54	(22.840)	3/16	(4.763)	⅜	(9.525)
0.102 square ± 0.003	(2.591 ± 0.076)	240	4.90	(31.615)	¼	(6.350)	½	(12.700)
0.103 ± 0.003 x 0.153 ± 0.005 rectangular	(2.667 ± 0.076) x (3.886 ± 0.127)	240	6.19	(39.938)	¼	(6.350)	½	(12.700)
0.125 ± 0.003	(3.175 ± 0.076)	240	4.71	(30.389)	¼	(6.350)	½	(12.700)
0.157 ± 0.004	(3.998 ± 0.102)	240	5.92	(38.196)	5/16	(7.938)	⅝	(15.875)
0.188 + 0.003 - 0.006	(4.775 + 0.076 - 0.152)	240	7.09	(45.745)	⅜	(9.525)	¾	(19.050)
0.128 square ± 0.003	(3.353 ± 0.076)	240	6.31	(40.712)	¼	(6.350)	½	(12.700)

In most cases 30 W/in^2 (4.65 W/cm^2) is the safe allowable limit for cable watt density. Please consult factory before ordering >30 WSI cables.
Standard Resistance/Wattage Tolerance ±10 percent.
Cable heaters can run on both ac and dc, 50 or 60Hz. Consult factory for amperage limitations.

Coiling Tolerances

Cable Diameters	Standard Coiled Width Tolerances				Standard Coiled I.D. Tolerances			
	Coiled Width		Tolerances		Coil I.D. Range		Tolerances	
	inches	(mm)	inches	(mm)	inches	(mm)	inches	(mm)
All Diameters	Below 6	(152.4)	+ 0 - ⅛	(+0.000 - 3.175)	Below 0.625	(Below 15.875)	+0.000 - 0.015	(+0 - 0.381)
	6 to 10	(152.4 to 254.0)	+ ⅛ - ⅜	(+3.175 - 9.525)	0.625 to 0.999	(15.875 to 25.375)	+0.000 - 0.030	(+0 - 0.762)
	Over 10	(Over 254.0)	+ ¼ - ¼	(+6.350 - 6.350)	1.000 to 1.999	(25.400 to 50.775)	+0.000 - 0.062	(+0 - 1.575)
					2.000 to 2.999	(50.800 to 76.175)	+0.000 - 0.125	(+0 - 3.175)
					3.000 to 3.999	(76.200 to 101.575)	+0.000 - 0.250	(+0 - 6.350)
					4.000 to 4.999	(101.600 to 126.975)	+0.000 - 0.375	(+0 - 9.525)
					5.000 and Over	(127.000 and Over)	+0.000 - 0.500	(+0 - 12.700)

When the O.D. of the coil is required to be the critical dimension, this fact must be specified at the time of ordering so that proper coiling procedures can be determined. I.D. and O.D. dimensions cannot be held on the same unit. Please consult with the factory before ordering coiled cable heaters requiring other than standard tolerances.

Cable Straight Length Tolerances

Length	≤24"	>24"≤60"	>60"≤100"	>100"
Tolerance	±⅜"	±½"	±1"	±1%

Cable Heaters

Versatile, Standard Cable Heaters

Formation Options

Standard Coil

The standard coil can be tight wound, open pitch or anything in between.

Closed Coil without Distributed Wattage

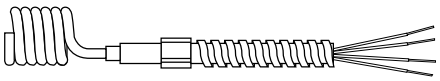

Closed Coil with Distributed Wattage

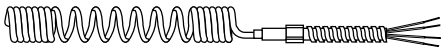

Lead Orientation Options for Coiled Cable Heaters

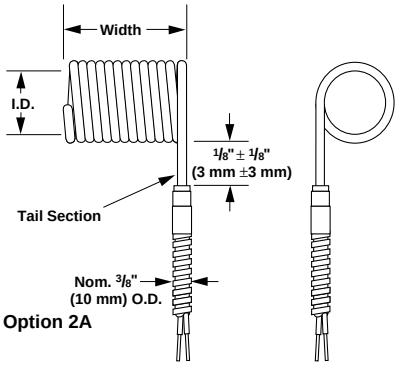

Option 2A

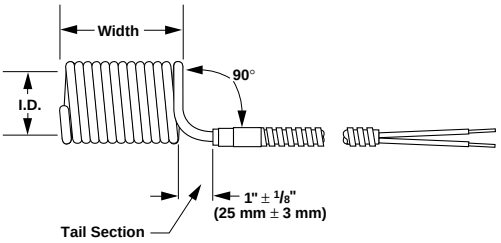

Option 2C

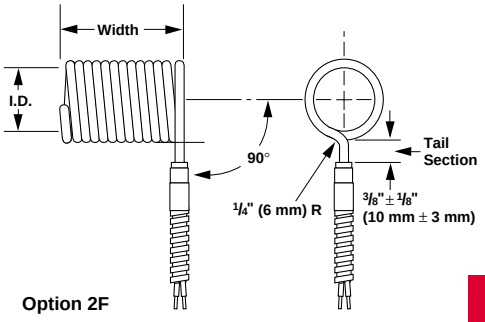

Option 2F

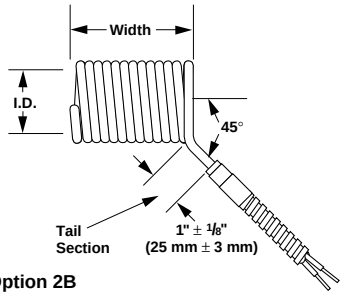

Option 2B

Flat Spiral

Flat spiral formations are used to heat flat circular surfaces. This formation is often used in semiconductor and medical applications.

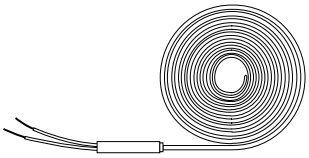

Flat Spiral with 2A Type Lead Orientation

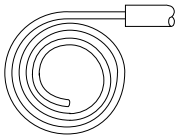

Flat Spiral with 2C Type Lead Orientation

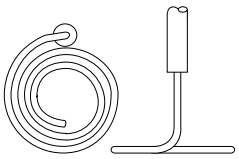

Flat Spiral with 2F Type Lead Orientation

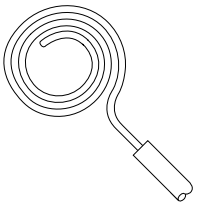

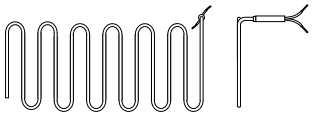

Sinuated

Sinuated cable heaters provide an alternative to the flat spiral coil heater, allowing greater coverage of flat rectangular surfaces. The sinuated formation can also be curved to heat cylindrical shapes. This formation is often used in radiant heating applications.

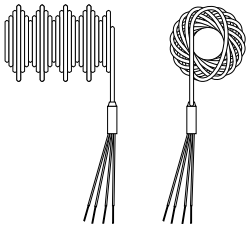

Star Wound

Star wound formations are usually inserted into pipes or ducts and are used to heat moving air or liquids. The offset coils increase/induce turbulent flow. This allows the flowing material to have better contact with the heater surface, resulting in a more efficient heat transfer.

Cable Heaters

Versatile, Standard Cable Heaters

Standard

Internal Construction

Sheath with Coiled Internal Resistance Wire

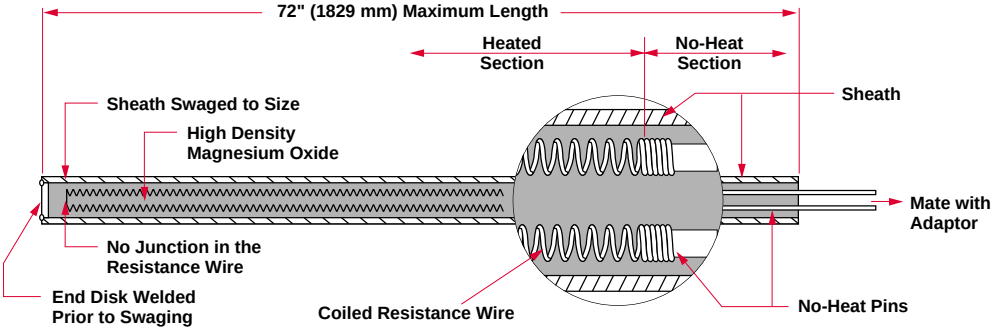

Parallel Coil Construction

Resistance wire, wound into a small coil, is loaded into insulating cores, then into metal tubing and swaged to final size. This method of construction is called **parallel coil.**

The parallel coil method allows for a no-heat section in the sheath. The length of either the heated section or no-heat section is variable as long as the combined length does not exceed 72 inches (1830 mm). Other features of this construction method include:

- Variable ohms/foot within a minimum and maximum range
- Variable location of the thermocouple junction
- Grounded or ungrounded thermocouple junction
- No-heat sections
- 304 stainless steel, 316L stainless steel or Inconel® 600 sheath material
- A variety of diameters and shapes:

  0.058 inch (1.473 mm) round

  0.094 inch (2.387 mm) round

  0.125 inch (3.175 mm) round (min. dia. with internal thermocouple)

  0.102 (2.591 mm) inch square

  0.128 inch (3.251 mm) square

  0.103 inch X 0.153 inch (2.616 mm X 3.886 mm) rectangular

Sheath with Straight (Uncoiled) Resistance Wire

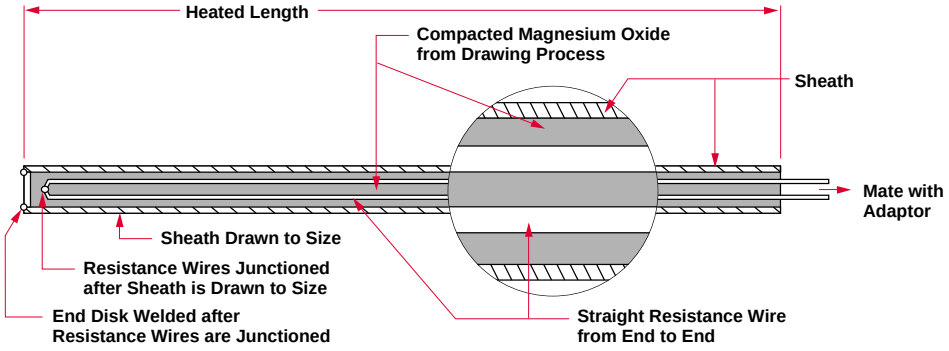

Drawn Cable Construction

Uncoiled resistance wires are positioned inside a large diameter metal tube. The tube assembly is repeatedly pulled through draw dies until the desired diameter is achieved. Though limited to fixed incremental ohms/foot and without no-heat sections, this **drawn cable** construction method does allow:

- Essentially no limit on cable length
- Thermocouple junction only at the disk end of the sheath
- Grounded or ungrounded thermocouple junction
- Sheath heated from end to end
- 304 stainless steel, 316L stainless steel or Inconel® 600 sheath material
- A variety of diameters and shapes:

  0.040 inch (1.016 mm) round

  0.062 inch (1.575 mm) round

  0.094 inch (2.388 mm) round

  0.125 inch (3.175 mm) round (min. dia. with internal thermocouple)

  0.157 inch (3.988 mm) round

  0.188 inch (4.775 mm) round

  0.128 inch (3.251 mm) square

  0.103 inch X 0.153 inch (2.616 mm X 3.886 mm) rectangular

Cable Heaters

Versatile, Standard Cable Heaters

Options

Internal Construction

Disk End of Sheath

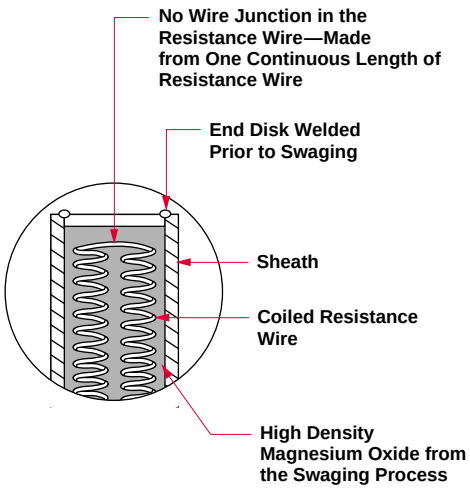

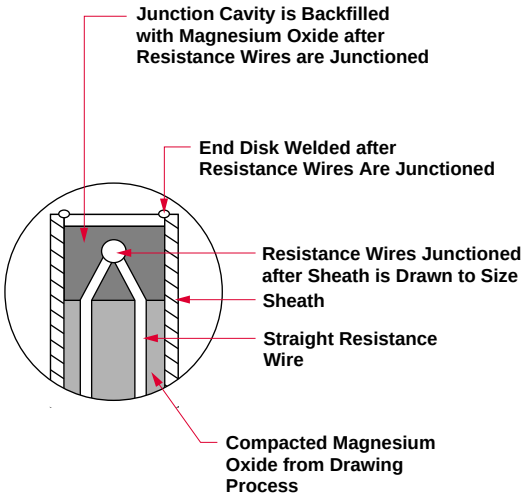

The end of the heater sheath opposite from the lead end is called the disk end.

With parallel coil construction methods, the internal resistance wires form a 180 degree bend inside the sheath and, so, do not require a junction. After the end cap has been welded in place, the entire area at the end of the sheath is swaged to provide maximum density of the magnesium oxide.

With drawn cable construction, the internal wires, whether resistance or thermocouple, must be junctioned before the heater sheath can be finished. Magnesium oxide is removed from the tip of the sheath, exposing the wires which are then junctioned by welding. Magnesium oxide powder is backfilled into the cavity surrounding the junctioned wires and lightly compacted. The end cap is inserted and welded into place.

Thermocouples

Internal thermocouples are available in ASTM Type J or K calibration with both the parallel coil or drawn cable construction methods.①

Parallel Coil:

- 0.125 inch round
- 0.128 inch X 0.128 inch square
- 0.103 inch X 0.153 inch rectangular

Drawn Cable:

- 0.125 inch round
- 0.157 inch round
- 0.188 inch round
- 0.128 inch X 0.128 inch square
- 0.103 inch X 0.153 inch rectangular

External thermocouples with Type J or K calibration can be spot welded or brazed to the heater sheath. The sheath size must be a minimum of 0.094 inch in diameter. Hose clamps can more easily be used to secure the thermocouple.

① Other thermocouple types available. Consult factory.

Versatile, Standard Cable Heaters

Options

Internal Construction

Continued

Adaptors

Adaptors are the transition sections where the lead wires are attached to the heater sheaths. The lead wires are connected with the internal wires from the sheath.

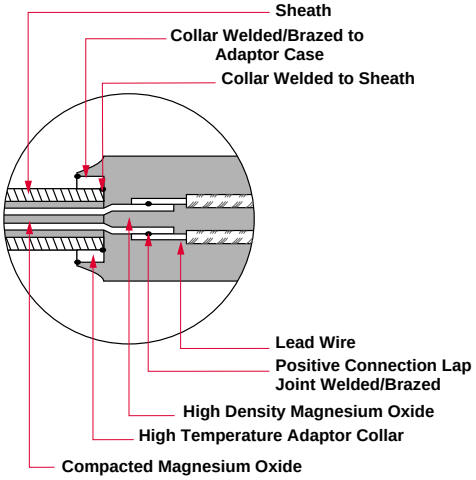

The **positive connection** lap joint brazes or welds the wire lap joint before the adaptor is swaged. Positive connection is used in all standard applications and provides added protection in high temperature environments and other severe and demanding applications.

An extended length adaptor collar, or **high temperature** collar, is used as a heat sink allowing the heater to be operated in high temperature and other demanding applications.

The positive connection and collar are used in conjunction with both power leads and thermocouple leads.

External Construction

Lead Wire:

100 percent nickel, copper, nickel plated copper or silver plated copper.

Insulation: Teflon®, fiberglass, or a high temperature variety such as MGT or MGE.

Consult factory for other wire options.

Lead Protection:

Stainless steel hose, stainless steel braid or fiberglass braid.

Consult factory for details.

Special Fittings

- VCR® and VCO® vacuum fittings or similar
- Ultra-Torr® compression fittings or similar
- Threaded screw headers
- Flanges
- Heat sinks

Consult factory for details.

Cable Heaters

F.O.B.: St. Louis, Missouri

Versatile, Standard Cable Heaters

How to Order

To order your stock cable heater, specify:

- Watlow code number and/or voltage and wattage specifications
- Forming options (required information):

  Straight - standard option unless otherwise specified

  Nozzle - coil I.D., coil width, lead orientation

  Distributed nozzle - coil I.D., coil width, lead orientation, number of zones

  Sinuated - height, width, bend radius, lead orientation

  Starwound - coil O.D., coil width, lead orientation

  Flat spiral - spiral I.D., spiral width, lead orientation
- Lead wire options (required information):

  Standard - 14 inch crimped-on fbg unless otherwise noted

  Fiberglass - various lengths available

  Teflon® - various lengths available
- Lead protection options (required information):

  Standard - 12 inch crimped-on stainless steel hose unless otherwise noted

  SS hose - various lengths available

  SS braid - various lengths available

  Fiberglass braid - various lengths available
- Internal thermocouple option:

  Type J thermocouple

  See stock product list for available units.
- Special adders

If the stock units do not meet application needs, consult factory for a quote on made-to-order units.

Availability

Stock: Straight units can be formed on request requiring one to two working days, contingent upon quantity and required options.

Made-to-Order: Delivery dependent on complexity of order. Consult factory for price and delivery quotations.

Cable Heater Stock Units (Internal Thermocouple Not Available)

Straight Cable Length in (mm)	Volts	Watts	Watt Density W/in² W/cm²	No-Heat Length in (mm)	Lead Wire	Lead Protection	Code Number
0.062-inch Diameter Round (with ±10 percent wattage tolerance)							
24 (609.6)	120	240	51 (7.9)	0.00 (0.00)	14" (355.6 mm) Fiberglass unless otherwise specified	12" (304.8 mm) SS hose unless otherwise specified	**62H24A6X**
36 (914.4)	120	400	57 (8.8)	0.00 (0.00)			**62H36A5X**
56 (1422.4)	120	330	30 (4.7)	0.00 (0.00)			**62H56A4X**
65 (1651.0)	120	500	39 (6.0)	0.00 (0.00)			**62H65A3X**
0.094-inch Diameter Round (with ±5 percent wattage tolerance)							
30 (762.0)	230	125	17 (2.6)	5.00 (127.00)	36" (914.4 mm) swaged-in Teflon® leads only	Lead protection not available	**94PC30A1X**
30 (762.0)	230	250	34 (5.3)	5.00 (127.00)			**94PC30A2X**
0.125 inch Diameter Round (with ±10 percent wattage tolerance)							
18 (457.2)	240	250	35 (5.4)	1.50 (38.10)	14" (355.6 mm) Fiberglass unless otherwise specified	12" (304.8 mm) SS hose unless otherwise specified	**125CH18A4X**
19 (482.6)	120	165	21 (3.3)	1.50 (38.10)			**125CH19A1X**
24 (609.6)	120	275	29 (4.5)	1.50 (38.10)			**125CH24A1X**
24 (609.6)	240	275	29 (4.5)	1.50 (38.10)			**125CH24A14X**
38 (965.2)	240	325	21 (3.3)	1.50 (38.10)			**125CH38A1X**
38 (965.2)	120	175	12 (1.9)	1.50 (38.10)			**125CH38A2X**
47 (1193.8)	240	260	14 (2.2)	1.50 (38.10)			**125CH47A1X**
47 (1193.8)	120	235	12 (1.9)	1.50 (38.10)			**125CH47A2X**
47 (1193.8)	120	375	20 (3.1)	1.50 (38.10)			**125CH47A3X**
47 (1193.8)	240	345	19 (2.9)	1.50 (38.10)			**125CH47A4X**
65 (1651.0)	240	420	16 (2.5)	1.50 (38.10)			**125CH65A1X**
65 (1651.0)	240	675	27 (4.2)	1.50 (38.10)			**125CH65A2X**
95 (2413.0)	240	1000	28 (4.3)	0.00 (0.00)			**125CH93A1X**

CONTINUED

Versatile, Standard Cable Heaters

Cable Heater Stock Units (Internal Thermocouple Not Available)

Straight Cable Length in (mm)	Volts	Watts	Watt Density W/in²	W/cm²	No-Heat Length in (mm)		Lead Wire	Lead Protection	Code Number
0.125 inch Diameter Round (with ±10 percent wattage tolerance)									
126 (3200.4)	240	1500	30	(4.7)	0.00	(0.00)	48" (1219 mm)	Lead protection	**125H126A4A**
150 (3810.0)	240	2000	34	(5.3)	0.00	(0.00)	swaged-in	is available	**125H150A3A**
223 (5664.2)	240	3000	34	(5.3)	0.00	(0.00)	Fiberglass	upon request	**125H223A1A**
							leads only		
0.128 inch Square Cross-Section (with ±10 percent wattage tolerance)									
12 304.8	120	200	36	5.6	1.50	(38.10)	14" (355.6 mm)	12" (304.8 mm)	**125PS12A24A**
12 304.8	240	200	36	5.6	1.50	(38.10)	Fiberglass	SS hose	**125PS12A23A**
20 508.0	120	300	31	4.8	1.50	(38.10)	unless otherwise	unless otherwise	**125PS20A37A**
20 508.0	240	300	31	4.8	1.50	(38.10)	specified	specified	**125PS20A38A**
30 762.0	120	450	30	4.7	1.50	(38.10)			**125PS30A47A**
30 762.0	240	450	30	4.7	1.50	(38.10)			**125PS30A48A**
38 965.2	240	600	31	4.8	1.50	(38.10)			**125PS38A23A**

Cable Heater Stock Units (Type J Internal Thermocouple)

Straight Cable Length in (mm)	Volts	Watts	Watt Density W/in²	(W/cm²)	No-Heat Length in (mm)		Lead Wire	Lead Protection	Code Number
0.125-inch Diameter Round (with ±10 percent wattage tolerance), Thermocouple located in center of heated section.									
24 (609.6)	120	275	29	(4.5)	1.50	(38.10)	48" (1219 mm)	Lead protection	**125CH24A13X**
38 (965.2)	120	175	12	(1.9)	1.50	(38.10)	swaged-in	is available	**125CH38A18X**
47 (1193.8)	120	235	13	(2.0)	1.50	(38.10)	Fiberglass	upon request	**125CH47A21X**
65 (1651.0)	240	675	26	(4.0)	1.50	(38.10)	leads only		**125CH65A26X**
NEW OFFERING									
0.157-inch Diameter Round (with ±10 percent wattage tolerance), Thermocouple located at the disk end of the cable.									
124 (3149.6)	240	1500	25	(3.9)	0.00	(0.00)	48" (1219 mm)	Lead protection	**157CH124AX**
150 (3810.0)	240	2000	27	(4.2)	0.00	(0.00)	swaged-in	is available	**157CH150AX**
220 (5588.0)	240	3000	28	(4.3)	0.00	(0.00)	Fiberglass	upon request	**157CH220AX**
							leads only		
0.128 inch Square Cross-Section (with ±10 percent wattage tolerance), Thermocouple located in center of heated section.									
12 (304.8)	240	200	36	(5.6)	1.50	(38.10)	48" (1219 mm)	Lead protection	**125PS12A22A**
20 (508.0)	120	300	31	(4.8)	1.50	(38.10)	swaged-in	is available	**125PS20A35A**
20 (508.0)	240	300	31	(4.8)	1.50	(38.10)	Fiberglass	upon request	**125PS20A36A**
30 (762.0)	240	450	30	(4.7)	1.50	(38.10)	leads only		**125PS30A46A**
38 (965.2)	240	600	31	(4.8)	1.50	(38.10)			**125PS38A24A**

Quick Ship • *Same day shipment on all stock units.*

Cable Heaters

Coiled Nozzle

The Watlow coiled nozzle heater features a five-inch long no-heat tail section. This design advantage eliminates failures in the adaptor area due to overheating.

Performance Capabilities

- ±5 percent wattage tolerance
- Possible operating temperature to 1200°F (650°C). Dependant on type of element wire used.

Features and Benefits

- **Low profile construction** provides easy installation in the tight environment of multiple-gate molds.
- **The no-heat tail section** reduces temperature at the adaptor, eliminating failures due to overheating.
- **The single tail with dual lead** feature occupies less space in the wire raceway.
- **Heat is conducted from the entire 360 degree circumference** for even heating.
- **Optional externally welded thermocouples to the sheath** provide temperature measurement capabilities.
- **Stocked sizes** are available for same day shipment.

Applications

- Plastic injection molding equipment
- Hot runner molds

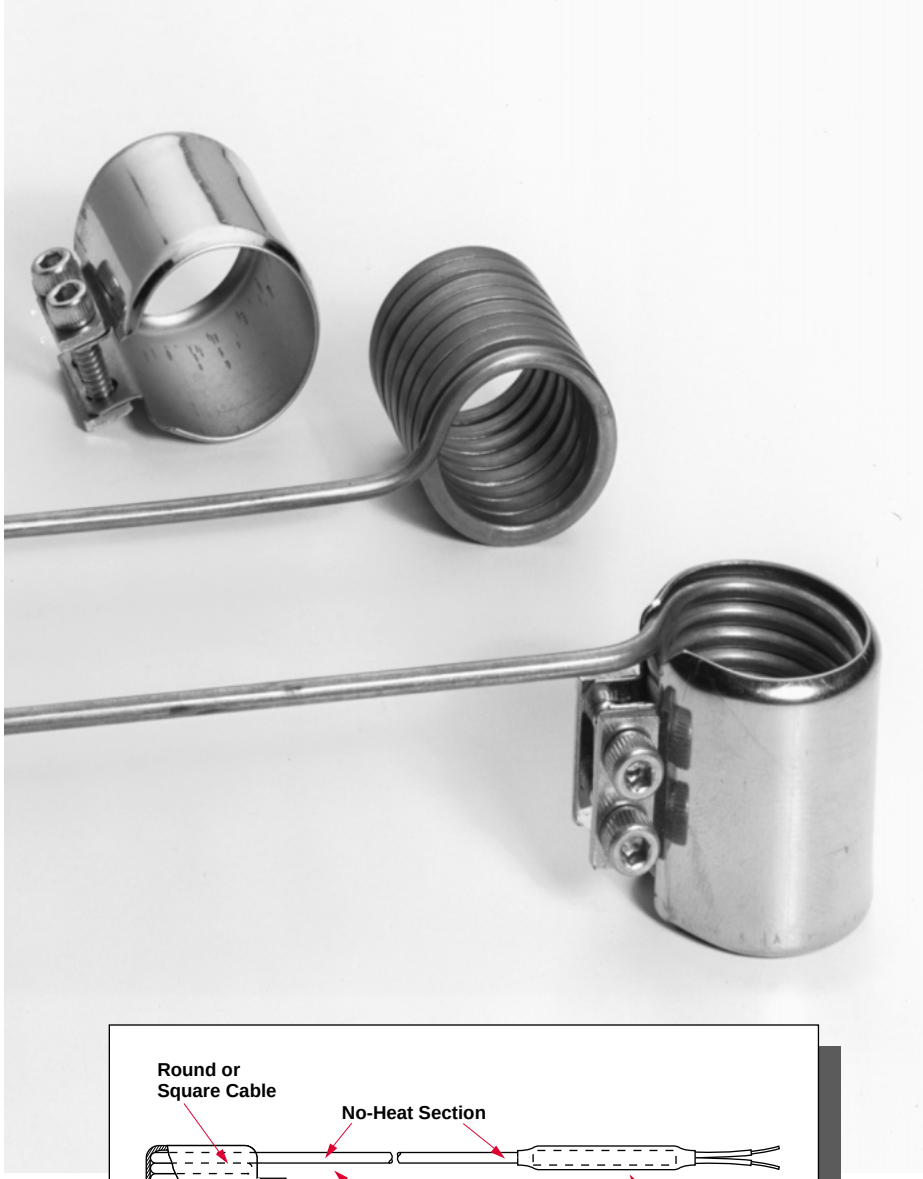

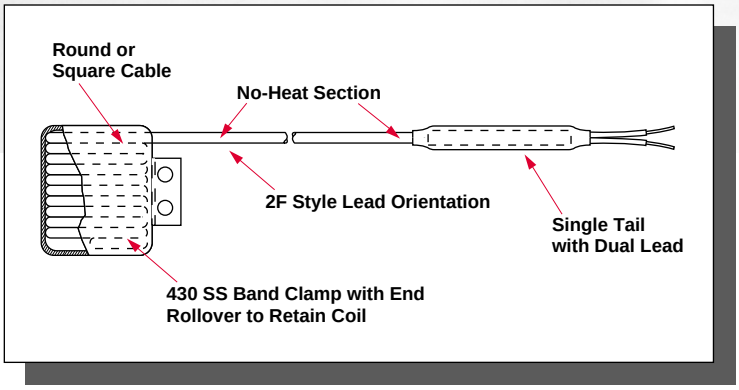

Cable Heaters

Coiled Nozzle

Technical Data

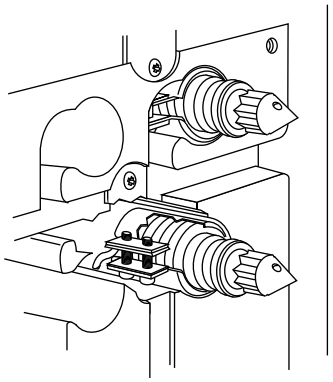

Coiled nozzle heaters mounted on a 64 cavity plastic injection mold.

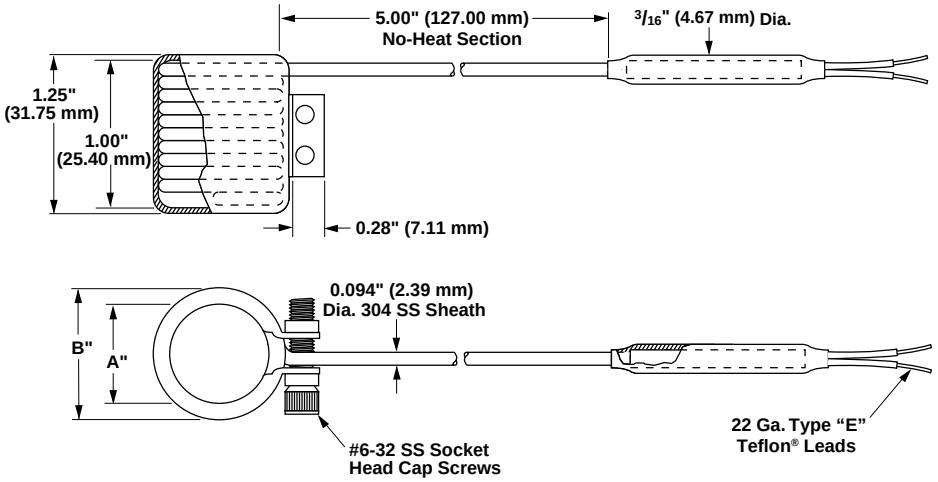

How to Order

To order your stock coiled nozzle heater, specify:

- Watlow code number
- Voltage
- Wattage
- Quantity

Availability

Stock: Same day shipment

Cable Heater Stock Units (Coiled Nozzle with Clamp Strap)

Volts	Watts	Coiled I.D. in (mm)	Clamp O.D. in (mm)	Clamp Width in (mm)	No-Heat	Lead Wire (Swaged-in) Teflon® Only	Code Number
0.094-inch Diameter Round (with ±5 percent wattage tolerance), no lead protection available.							
230	125	0.75 (19.05)	0.98 (24.89)	1.25 (31.75)	5" (127 mm)	36" (914.4 mm)	**94PC30A1A**
230	125	0.75 (19.05)	0.98 (24.89)	1.25 (31.75)	only	72" (1828.8 mm)	**94PC30A1D**
230	250	0.75 (19.05)	0.98 (24.89)	1.25 (31.75)		36" (914.4 mm)	**94PC30A2A**
230	250	0.75 (19.05)	0.98 (24.89)	1.25 (31.75)		72" (1828.8 mm)	**94PC30A2D**
230	250	0.75 (19.05)	0.98 (24.89)	1.25 (31.75)		36" (914.4 mm)	**94PC30A4A** ①
0.102-inch Square Cross-Section (with ±5 percent wattage tolerance), no lead protection available.							
230	125	0.75 (19.05)	1.00 (25.40)	1.25 (31.75)	5" (127 mm)	36" (914.4 mm)	**102PS28A2B**
230	125	0.75 (19.05)	1.00 (25.40)	1.25 (31.75)	only	72" (1828.8 mm)	**102PS28A2A**
230	250	0.75 (19.05)	1.00 (25.40)	1.25 (31.75)		36" (914.4 mm)	**102PS28A1B**
230	250	0.75 (19.05)	1.00 (25.40)	1.25 (31.75)		72" (1828.8 mm)	**102PS28A4A**①
230	250	0.875 (22.23)	1.12 (28.45)	1.25 (31.75)		36" (914.4 mm)	**102PS32A1A**

① Units have a 36 inch fiberglass insulated Type J thermocouple externally spot welded to the heater O.D. sheath.

Teflon® is a registered trademark of E.I. du Pont de Nemours & Company.

Quick Ship • *Same day shipment on all stock units.*

Cable Heaters

Mini-Cable Nozzle

The 0.058-inch mini-cable nozzle heater provides “worry-free” heat for hot runner systems. The heater features a no-heat tail section, and the adaptor has a moisture resistant, hermetic seal to virtually eliminate failures due to moisture contamination and overheating in the seal area. An axial access clamp provides easy installation.

Performance Capabilities

- ±5 percent wattage tolerance
- Watt densities to 40 W/in^2
- Possible sheath temperatures up to 1200°F (650°C) continuously and 1500°F (815°C) intermittent. Dependant on type of element wire used.

Features and Benefits

- **Five-inch no-heat tail section** prevents overheating failure in transition area.
- **Hermetic seal** prevents moisture in adaptor area.
- **304 stainless steel axial access clamp** provides easy installation.
- **Heat is conducted from the entire 360 degree circumference** for even heating.
- **Optional externally welded thermocouples** provide temperature measurement capabilities.
- **72-inch Teflon® lead wire.**

Applications

- Hot runner molds
- Semiconductor fabrication
- Medical instruments
- Packaging
- Environmental
- Small cast-in heaters
- Plastic injection molding

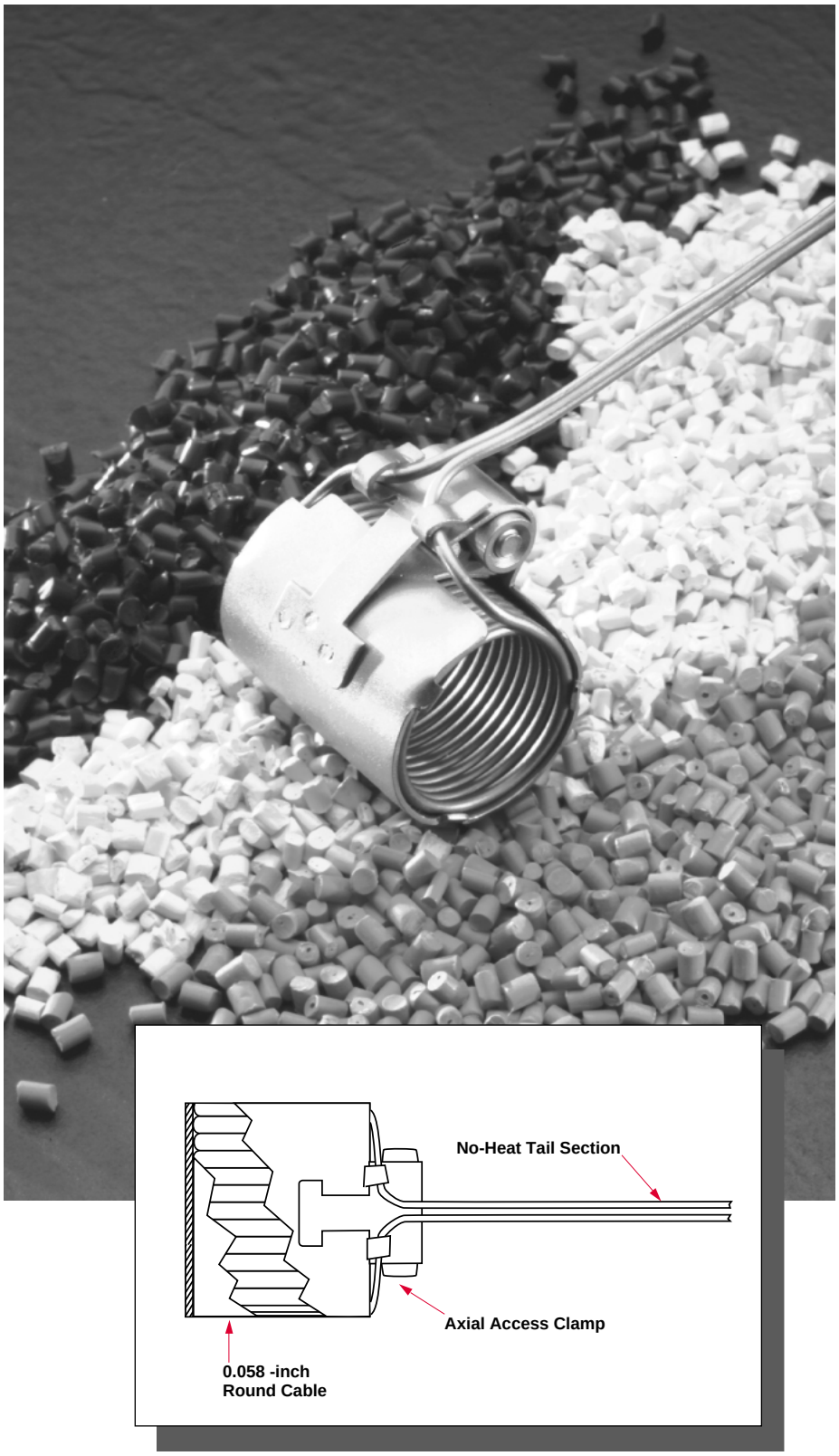

Teflon® is a registered trademark of E.I. du Pont de Nemours & Company.

Mini-Cable Nozzle

0.058 inch Diameter Round Mini-Cable Nozzle Heater

(with ±5 percent wattage tolerance)

Coil I.D. in	Coil I.D. (mm)	Watts	Volts	Lead Length in	Lead Length (mm)	Clamp Width in	Clamp Width (mm)	Cable Type	Code No.
0.75	(19.05)	268	240	72	(1828.8)	1.250	(31.75)	Round	**Z5969**
0.75	(22.20)	149	240	72	(1828.8)	1.250	(31.75)	Round	**Z5968**

Note: An **optional** Type J or Type K thermocouple can be externally spotwelded to the sheath O.D.

How to Order

To order your stock coiled nozzle heater, specify:

- Watlow code number
- Voltage
- Wattage
- Quantity

Availability

Stock: Same day shipment

Quick Ship • *One to three day shipment.*

Cable Heaters

STARFLOW Circulation Heater

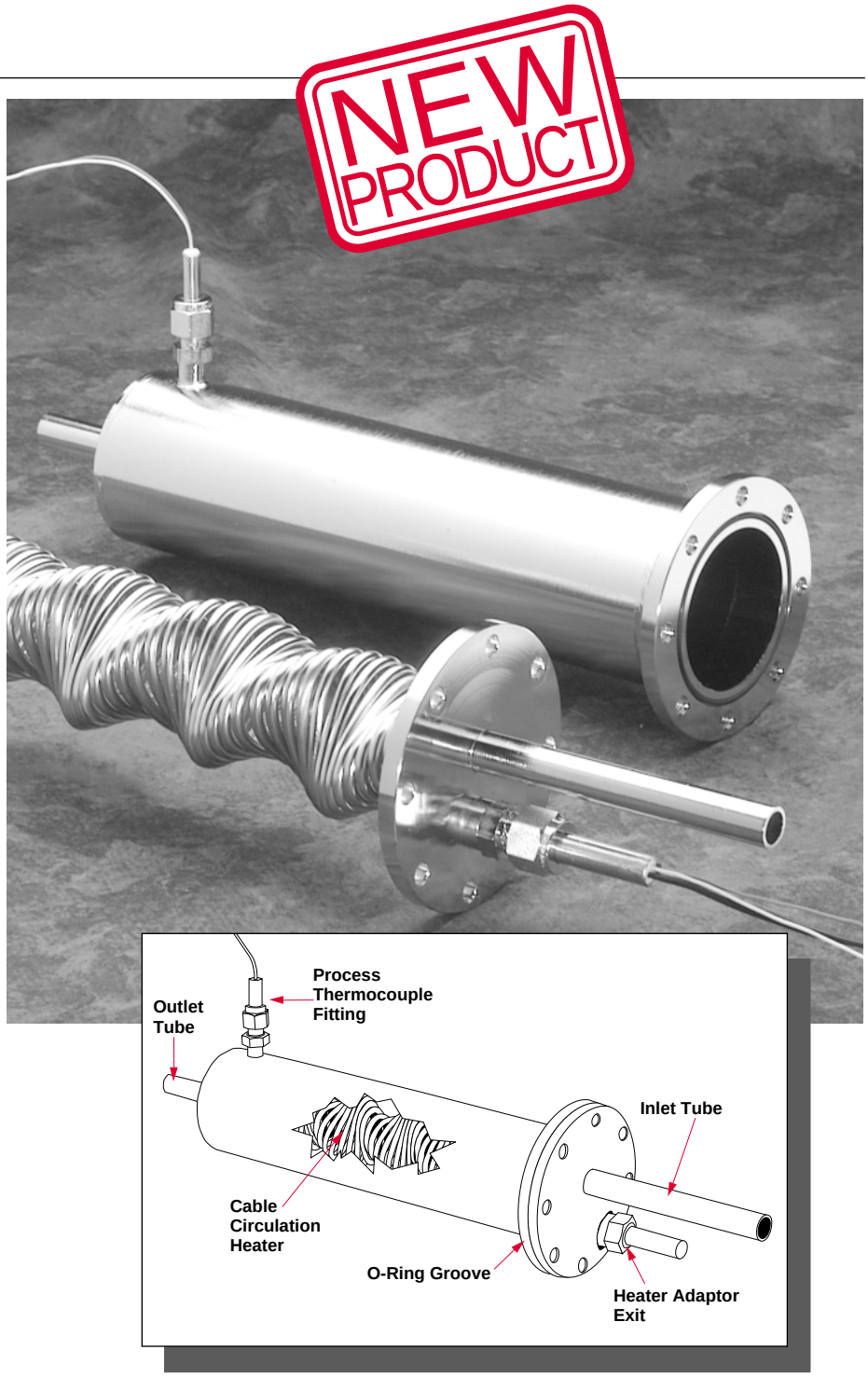

Throughout many steps in the semiconductor manufacturing process, Watlow cable circulation heaters help to improve process time and operating efficiency. Using clean, hot gases reduces wafer drying time. Flameless dry heat efficiently solders and desolders electronic circuits and boards. Heated gas streams quickly dry and cure circuit boards without using a large baking oven, saving precious floor space. Watlow's STARFLOW circulation heater is specifically designed to meet the requirements of these applications.

The STARFLOW circulation heater is engineered to heat a flowing gas stream up to temperatures of 1400°F (760°C). The 316L stainless steel chamber houses a small diameter sheathed element, which allows for quick response to both heat up and cool down cycles. Watlow's starwound coiled cable heater provides extremely efficient and reliable heating by maximizing the contact area of the gas or fluid with the element.

Because the element is sheathed, the unit can operate in gas streams that require a clean environment as well as atmospheres that contain contaminants and moisture. This provides superior performance compared to units with internally exposed or open element wires.

Features and Benefits

- **Small diameter heater** allows for quick response times.
- **Internal star wound heater element** provides fast, efficient heating.
- **Sheathed element** can run in clean or impure streams.
- **Flexibility in configurations** allows for adaptablity to any process.
- **316L stainless steel construction** is rugged and corrosion resistant.
- **Electropolishing available on all wetted surfaces** to reduce particulate contamination.
- **Thermocouple Type J or K options** provide precise control and high limit safety.
- **Replaceable thermocouple and heating element** reduces replacement costs.
- **Shipment from stock** reduces downtime.

Applications

- Semiconductor processing
- Curing and drying
- Electronics
- Heat shrinking
- Thermal forming/sealing

STARFLOW Circulation Heater

Ordering Information

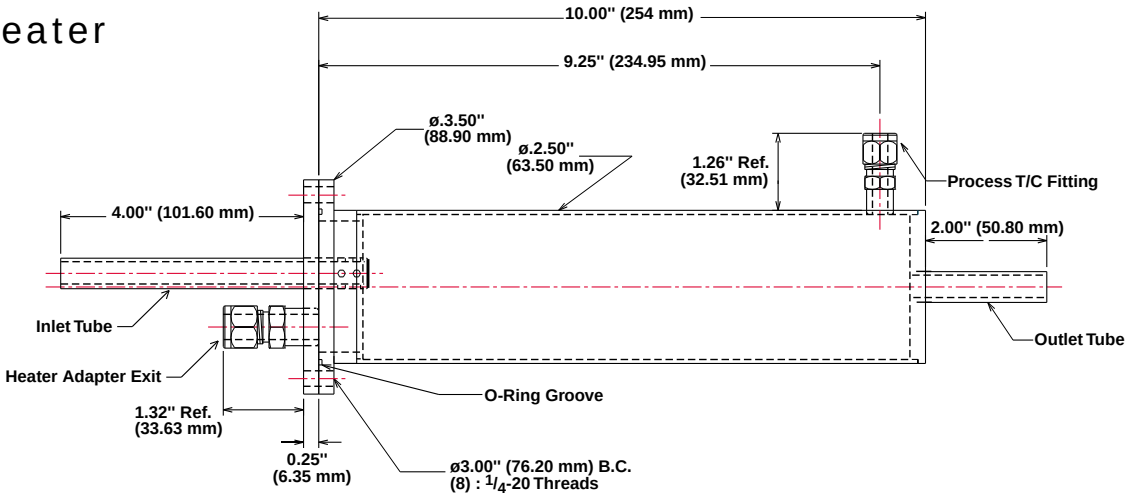

1	2	3	4	5	6	7	8	9	10	11	12	13	14
C	H												

3-4. Type of Inlet

ET = ¼" (6.35 mm) O.D. tube

JT = ½" (12.7 mm) O.D. tube

5-6. Type of Outlet

ET = ¼" (6.35 mm) O.D. tube

JT = ½" (12.7 mm) O.D. tube

7-10. Heater Wattage

0375 = 120V 375W

0500 = 120V 500W

0750 = 120V 750W

1500 = 240V 1500W

2000 = 240V 2000W

3000 = 240V 3000W

11. Internal Thermocouple Calibration (Heater)

J = Type J

K = Type K

12. Surface Finish of Assembly and Heater

X = Unfinished

E = Electropolished

13. Process Thermocouple Calibration (Assembly)

J = Type J

K = Type K

14. O-Ring Material

A = Viton® (500°F/260°C)

F = Aflas® (446°F/230°C)

T = Teflon® encapsulated Viton® (392°F/200°C)

Availability

Consult a Watlow sales engineer or the St. Louis facility for availablity of custom manufactured products.

Aflas® is a registered trademark of the Asahi Glass Co., Ltd.

Viton® and Teflon® are registered trademarks of E.I. du Pont de Nemours & Company.

Quick Ship • *Same day shipment on all stock units.*

Cable Heaters

K-RING®

Watlow's K-RING® heater takes nozzle heater technology a step ahead of the competition. Thanks to its innovative design, plastic molders no longer have to compromise with sloppy fit tolerances, uneven temperature profiles or short heater life.

Featuring a machined brass casting construction, the K-RING heater can handle very high temperatures while providing maximum heat transfer.

With a precision machined inside diameter, the K-RING heater fits perfectly—and it doesn't even require clamping bands. Precision fit, along with the excellent thermal conductivity of brass, allow the K-RING to give you an extremely even temperature profile.

Performance Capabilities

- Operating temperature to 1200°F (650°C)
- Maximum watt density on inside diameter to 260 W/in^2 (40 W/cm^2).
- Maximum voltage to 240V~(ac)

Features and Benefits

- **Brass casting construction** protects the heater from damage, as well as maximizes transfer of heat to heated parts.
- **Precision machining** of length and inside diameter gives precision fit tolerances.
- **Sealed construction** of the heater body eliminates contamination. The adaptor also effectively seals the lead exit.
- **Stainless steel outer casing** protects the brass heater body, and as an option, can be polished to increase heater efficiency.
- **Distributed wattage** allows heat to be precisely placed for an even temperature profile.
- **Customized diameters,** with quick delivery, are available to meet specific application needs.

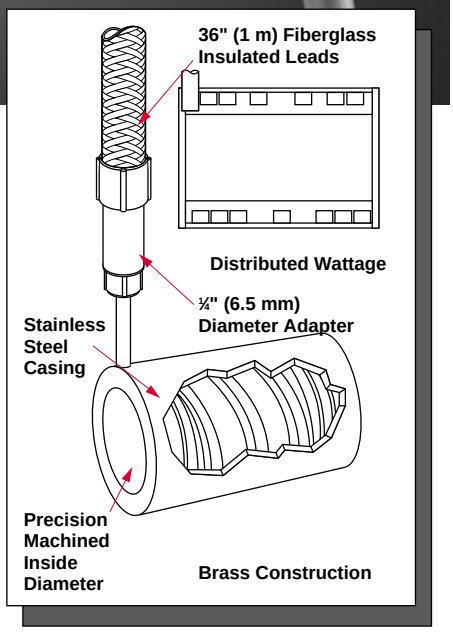

Applications

- Sprue bushings in plastic molding equipment
- Plastic injection nozzles
- Process heating of liquids and gasses in processing lines
- Hot melt equipment
- Laboratory and analytical equipment

Electrical Tolerances

Resistance: ±10 percent

Wattage: ±10 percent

Cable Heaters

K-RING

Termination Options

Protection Against Abrasion

Crimped-on fiberglass braid or stainless steel braid offers lead wire protection against abrasion or sharp equipment. To order, specify **fiberglass braid** or **stainless steel braid** and **lead length**.

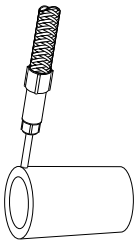

Heavy Duty Strain Relief

A heavy duty stainless steel tube is added to the cable transition of the K-RING, providing strain relief to the lead exit. This is supplied as a standard feature.

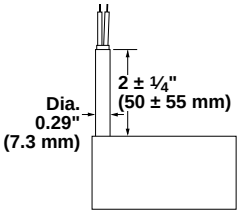

Internal Thermocouple

Internally grounded **Type J** or **Type K** thermocouples, offer accurate sensing of internal heater temperatures. Thermocouple wires attach directly to a Watlow controller, which must be purchased separately.

Thermocouples are supplied with 1 m (36 inches) fiberglass insulated leads. Upon request, longer lead lengths are available.

To order, specify **internal thermocouple, Type J** or **K**, and lead length.

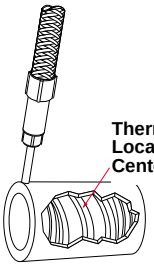

Sensors

Thermocouple Types

ASTM Code	Conductor Positive	Characteristics Negative	Temperature Range °C	(°F)
J	Iron (Magnetic)	Constantan (Non-Magnetic)	-20 to 760	(0 to 1400)
K	Chromel® (Non-Magnetic)	Alumel® (Magnetic)	-20 to 1260	(0 to 2300)

K-RING Stock Nozzle Heater

I.D. inches	(mm)	Nominal O.D. inches	(mm)	Length inches	(mm)	Watts	Volts	Code Number
½	13	1	25	1	25	175	240	**BKR1302501A**
½	13	1	25	2	51	300	240	**BKR1305101A**
⅝	16	1⅛	28	2	51	300	240	**BKR1605102A**
⅝	16	1⅛	28	3	76	500	240	**BKR1607602A**
⅝	16	1⅛	28	4	102	750	240	**BKR1610202A**
¾	20	1¼	32	1	25	250	240	**BKR1902501A**
¾	20	1¼	32	2	51	350	240	**BKR1905101A**
⅞	22	1⅜	34	2	51	500	240	**BKR2205102A**
⅞	22	1⅜	34	3	76	750	240	**BKR2207601A**
⅞	22	1⅜	34	4	102	1000	240	**BKR2210201A**

Inner diameter tolerance to ±0.001 in (0.025 mm).
Length tolerance ±0.02 in (0 to 100 mm ±0.5 mm); over ±0.04 in (100 mm ±1.0 mm).
Note: Custom metric manufactured K-RING heaters, F.O.B. Germany.

F.O.B.: Batavia, Illinois

How to Order

To order stock K-RING heater, specify:

- Required inside diameter
- Maximum allowable outside diameter
- Maximum allowable length of the K-RING
- Volts/watts
- Lead length, protection and thermocouple type if other than standard
- Any of the options required

Availability

Stock: Same day shipment

Made-to-Order: Consult Watlow

Alumel® and Chromel® are registered trademarks of Hosking Manufacturing Co.

Cable Heaters

Metric Mini K-RING®

Watlow's mini K-RING® heater is ideal for applications where space is limited such as hot runner molds with multiple cavities. The heating element fits easily into the small area and heats with precision and efficiency.

The mini K-RING heater features highly flexible unheated ends which give the customer the ability to form leads to the wire channel. The unit also contains small lead adapters which take up less space in the machine.

With a precision machined inside diameter, the mini K-RING heater fits perfectly—and it doesn't require clamping bands. Precision fit, along with the excellent thermal conductivity of brass, allow the K-RING to give you an extremely even temperature profile.

Performance Capabilities

- Operating temperature to 650°C (1200°F)
- Maximum watt density on inside diameter to 50 W/cm^2 (320 W/in^2)
- Maximum voltage to 240V~(ac)

Features and Benefits

- **Brass casting construction** protects heater from damage, as well as maximizes transfer of heat to heated parts.
- **Precision machining** of length and inside diameter gives precision fit tolerances.
- **Sealed construction** of the K-RING eliminates contamination.

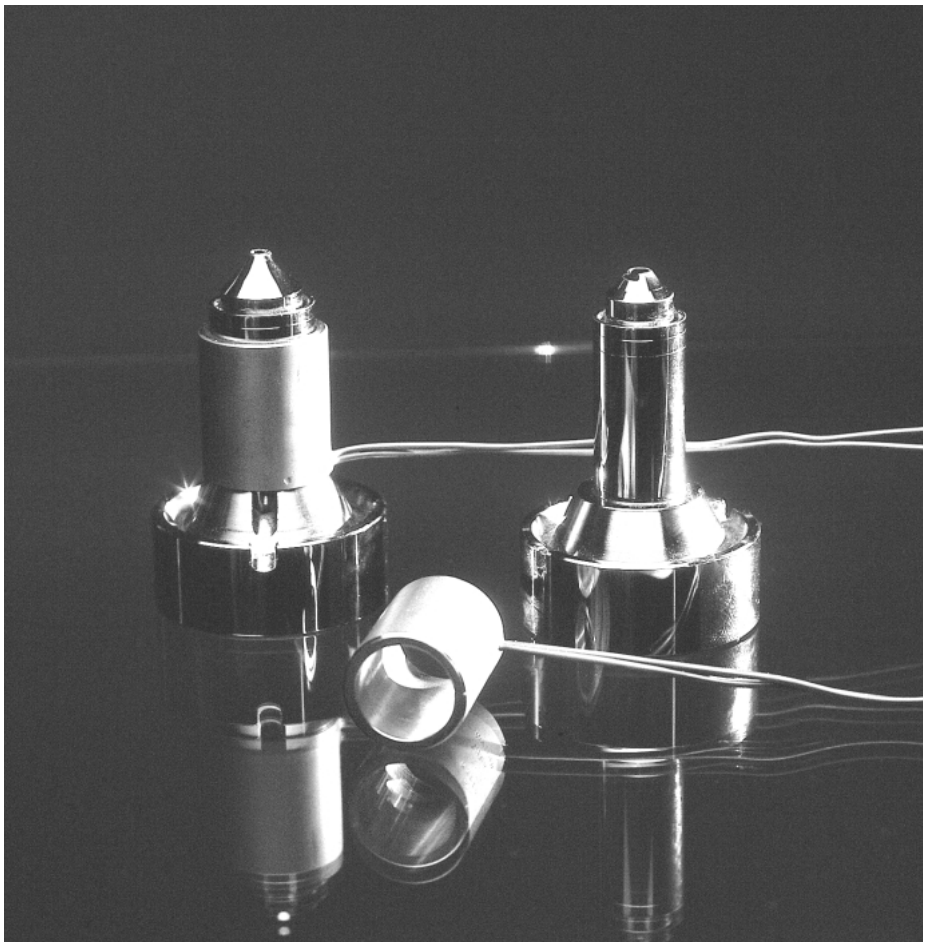

- **Stainless steel outer casing** protects the brass heater body, and acts as an insulator.
- **Distributed wattage** allows heat to be precisely placed for an even temperature profile.
- **Customized diameters** are available to meet specific application needs.

Applications

- Sprue bushings in plastic molding equipment
- Plastic injection nozzles
- Process heating of liquids and gasses in processing lines
- Hot melt equipment
- Laboratory and analytical equipment

Metric Mini K-RING

Technical Data

K-RING and Mini K-RING Comparison Chart

Characteristic	K-RING	Mini K-RING
Maximum voltage	240 volts	240 volts
Maximum amperage	4.5 amps	2.0 amps
Minimum outer diameter	18 mm (0.70")	10 mm (0.39")
Minimum wall thickness	4 mm (0.16")	2.5 mm (0.10")
Maximum element length	I.D. up to 12 mm (0.47") Length = 100 mm (4") I.D. 12 to 20 mm (0.47 - 0.80") Length = 200 mm (8") I.D. > 20 mm (0.80") Length = 300 mm (12")	I.D. up to 10 mm (0.39") Length = 60 mm (2.40") I.D. > 10 mm (0.39") Length = 100 mm (4")
Thermocouple	Internal Type J or K	External possible
Lead - T/C insulation	Fiberglass Teflon®	Fiberglass Teflon®
Lead protection	Fiberbraid Stainless steel braid Stainless steel hose	None
Lead adapter	Standard swaged 6.5 mm (¼") diameter	Hermetic seal 3 mm (0.12") diameter
Lead exit	Single ended	Dual ended
Lead exit length	Standard = 25 mm (1") to adapter longer pssible upon request	Standard = 100/150 mm (4/6") staggered longer or shorter possible upon request
Reinforced lead exit	Yes - Diameter 7.4 mm (0.29") minimum 50 mm (2") long	No
Wattage tolerance	±10%	±10%

How to Order

To order your mini K-RING heater, specify:

- I.D.
- Maximum possible O.D.
- Length
- Voltage
- Wattage
- No-heat at lead end
- Lead exit
- Lead length
- Wattage distribution

Cartridge Heaters

FIREROD®

The Watlow FIREROD® revolutionized the heating element industry in 1954 when it was patented as the first swaged cartridge heater. With premium materials and tight manufacturing controls, the FIREROD heater continues to provide superior heat transfer, uniform temperatures and resistance to oxidation and corrosion even at high temperatures.

FIREROD offers many delivery programs to meet your needs: same day shipment, Ship-to-Stock or Just-in-Time. And our experience in customized engineering is reflected in over 250,000 FIREROD cartridge heater designs. Stock or made-to-order, the Watlow FIREROD delivers heat in a hurry.

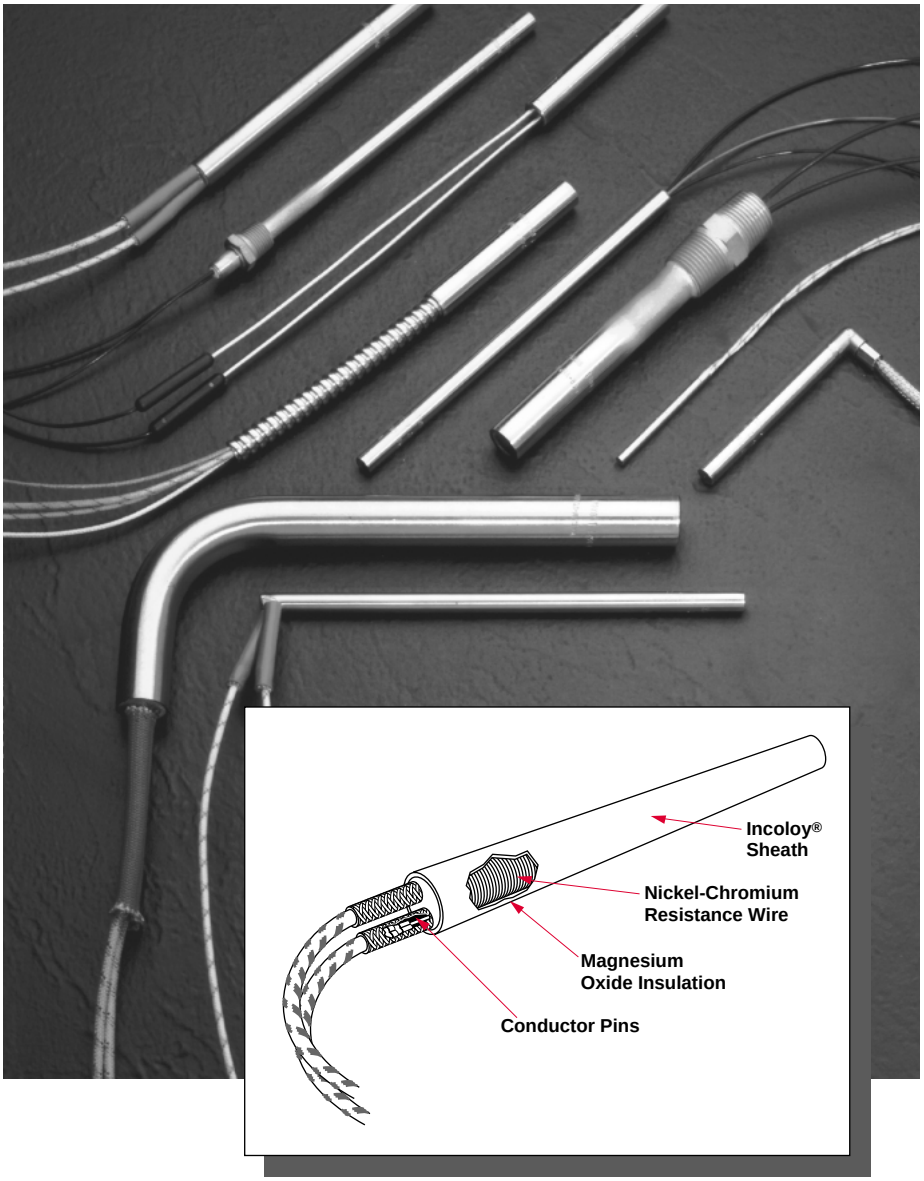

Performance Capabilities

- Part temperatures to 1400°F (760°C) on Incoloy® sheath
- Part temperatures to 1000°F (540°C) on optional stainless steel sheath
- Watt densities to 400 W/in^2 (62 W/cm^2)

Features and Benefits

- **Nickel-chromium resistance wire,** precisely wound and centered in the unit, assures even, efficient distribution of heat to the sheath.
- **Conductor pins** metallurgically bonded to the resistance wire ensure trouble-free electrical continuity.
- **Magnesium oxide insulation of specific grain and purity,** swaged to the proper density, results in high dielectric strength and contributes to faster heat-up.
- **Incoloy® sheath** resists oxidation and corrosion from many chemicals, heat and atmospheres.
- **Minimal spacing between the element wire and sheath** results in lower internal temperature, giving you the ability to design with fewer or smaller heaters that operate at higher watt densities.
- **UL® and CSA approved flexible stranded wires,** with silicone-fiberglass oversleeve, insulate the wires to temperatures of 480°F (250°C).
- **Patented Lead Adaptor (LA) method** allows same day shipment on more than 150,000 configurations of stock FIREROD heaters and lead combinations.

Applications

- Molds
- Dies
- Platens
- Hot plates
- Sealings
- Fluid heating
- Life sciences
- Aerospace
- Semiconductor
- Foodservice equipment

FIREROD

Applications and Technical Data

Tolerances

Diameter:

1 inch units: ±0.003 inches (±0.076 mm)

All other units: ±0.002 inches (±0.0508 mm)

Length:

All units to 4½ inches (115 mm) long: ±3/32 inch (±2.4 mm)

⅛ inch diameter units over 4½ inches (75 mm) long: ±3 percent

All other units over 4½ inches (115 mm) long: ±2 percent

Wattage:

⅛ inch units: +10 percent, -15 percent

All other units: +5 percent, -10 percent

Resistance:

⅛ inch units: +15 percent, -10 percent

All other units: +10 percent, -5 percent

Resistance changes with temperature. There are three circumstances under which resistance can be measured:

1. Room temperature (before use): nominal ohms are 90 percent of ohm's law calculation.
2. Room temperature (after use): nominal ohms are 95 percent of ohm's law calculation.
3. At temperature (during use): depending on application nominal ohms are approximately 100 percent of ohm's law.

Camber:

Units to 12 inches long: 0.005 inch per six inch length. Standard camber tolerance varies as the square of the length, in feet, is multiplied by 0.020 inches. For example, a 36 inch FIREROD has a camber tolerance of 0.020 inches X $(3)^2$ = 0.180 inches. Normally, slight camber does not present a problem since the heater will flex enough to fit into a straight, close fit hole.

Component Recognition File Numbers

UL® component rated to 240V~(ac) (file number E52951)

CSA component rated to 240V~(ac) (file number LR7392)

VDE component rated to 240V~(ac) (file number 10062-4911-0006)

Note: Not all options are covered.

Electrical Data

The *Electrical Data* table will assist you in selecting the correct FIREROD heater for your application, according to available voltage, amperage and wattage.

Please note, some combinations of minimum and maximum wattages are not available on the same heater diameter. Also, if you need to exceed limitations shown, contact your Watlow sales engineer or authorized distributor.

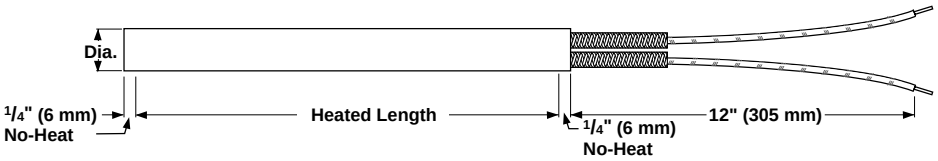

Number Of Circuits ⑤		
Diameter inches	1-phase	3-phase
¾	3	1
1	5	2

FIREROD Diameter inches	Volts Max.	Amp Max. ①	Minimum Watts@120V② Heater Length			Maximum Watts				
			1 in (25 mm)	1 ½ in (38 mm)	2 in (50 mm)	120V 1-phase	240V 1-phase	480V 1-phase	240V 3-phase	480V 3-phase
⅛	240	3.1	—	8	5	360	720	—	—	—
¼	240	4.4⑥	100	55	40	525	1050	—	—	—
⅜	240	6.7	65	35	25	800	1600	—	④	—
½	240	9.7	40	25	20	1,160	2,320	—	④	—
⅝	480	23.0	35	20	15	2,760	5,520	11,000	④	—
¾	480	23.0	30	15	10	2,760③	5,520	11,000	9,550	19,100
1	480	23.0	—	15	10	2,760③	5,520	11,000	9,550③	19,100③

① Determined by the current carrying capacity of internal parts and standard lead wire.

② Determined by the limitation of space for resistance winding. For minimum wattage of 240V~(ac) multiply value by four.

③ Higher wattages are available using more than one set of power leads. Multiply the wattage from the table by the applicable factor.

④ Consult the Watlow factory in St. Louis, Missouri, for data.

⑤ On ¾ inch diameter units, either three single- phase circuits or one three-phase Delta or Wye circuit is available. On one inch diameter units, either five single-phase or two three-phase Delta circuits are available.

⑥ For ¼ inch units with thermocouple maximum amperage is 3.1.

Cartridge Heaters

FIREROD

Maximum Allowable Watt Density

For metric watt density conversion see Metric FIREROD Cartridge, pages 119 and 120.

The following four charts detail maximum allowable watt densities for applications involving metal heating or steam, air and gas heating. Please review these respective charts and applicable data to determine the correct watt density for your application.

Correction Factors:

Also note, these graphs depict FIRERODs used in steel parts. Therefore, for either stainless steel or aluminum and brass, refer to applicable correction factors:

① For stainless steel, enter the graph with a fit 0.0015 inch (0.04 mm) larger than actual.

② For aluminum and brass, enter the graph with a temperature 100°F (38°C) above actual temperature.

Heating Metals

The *Maximum Watt Density—Heating Metals* chart will tell you either the maximum hole fit or recommended watt density of the heater. Enter the chart with either known variable, part fit in hole dimension or W/in². Then find the application temperature by reading up or over on the chart.

If the fit of the heater in the hole dimension is not known, it is easily determined. Subtract the minimum diameter of the FIREROD (nominal diameter minus tolerance) from the maximum hole diameter. For example, take a hole diameter of 0.500 minus a heater diameter of 0.496 ±0.002 inch. The hole fit would be 0.006 inch. For FIREROD heaters in square holes or grooves, contact your Watlow sales engineer or authorized distributor for the fit in hole dimension.

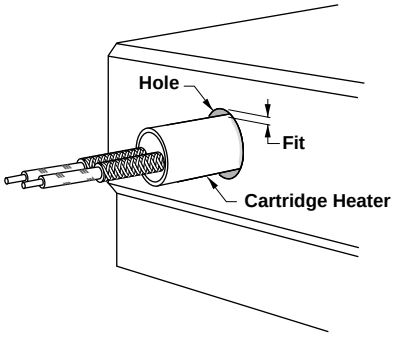

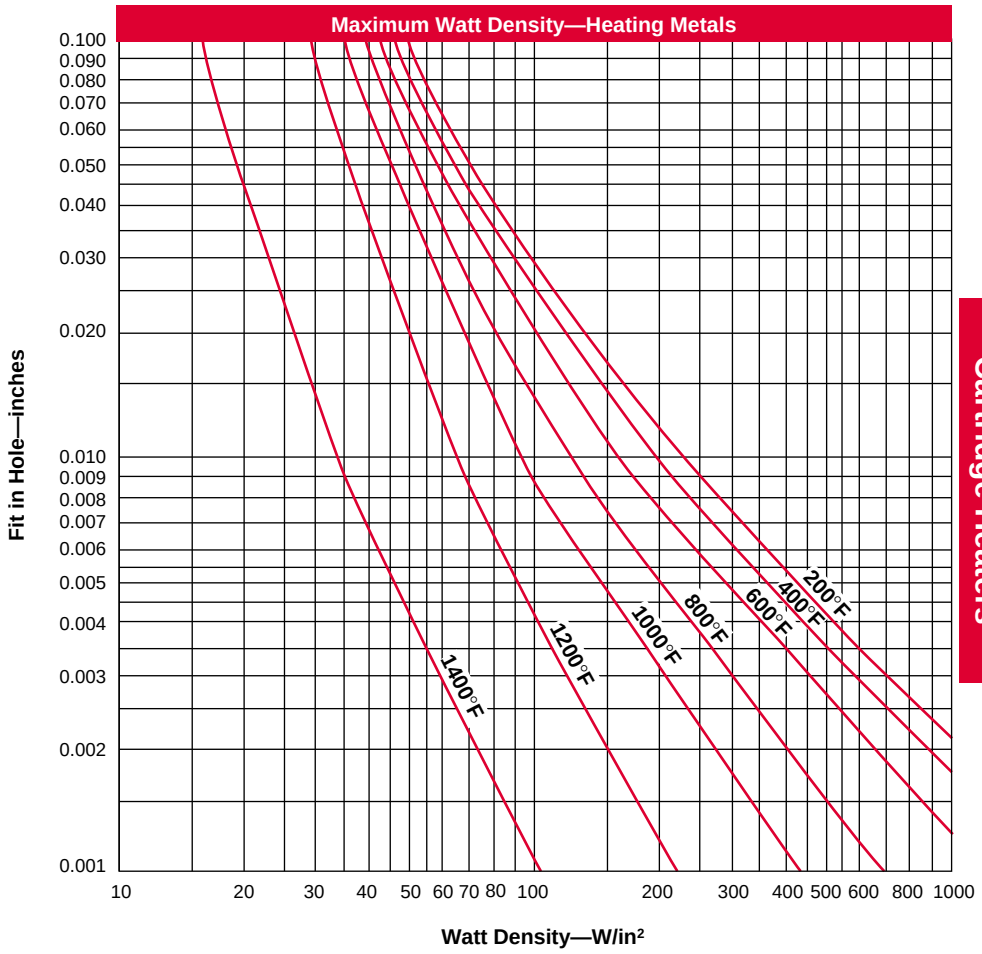

FIREROD

Maximum Allowable Watt Density
Continued

Heating Steam, Air and Gases

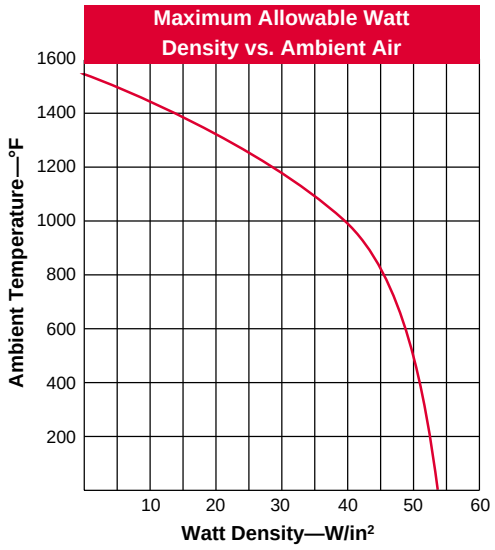

Watt Density vs Ambient Air Temperature

The *Watt Density vs Ambient Air Temperature* graph shows the maximum allowable watt density when one FIREROD is operated in air or similar gas.

For FIRERODs grouped in a single row, with no less than one diameter between elements, multiply value from graph by 0.95. When a reflector is placed behind the heaters, multiply the maximum allowable watt density value from the graph by 0.85.

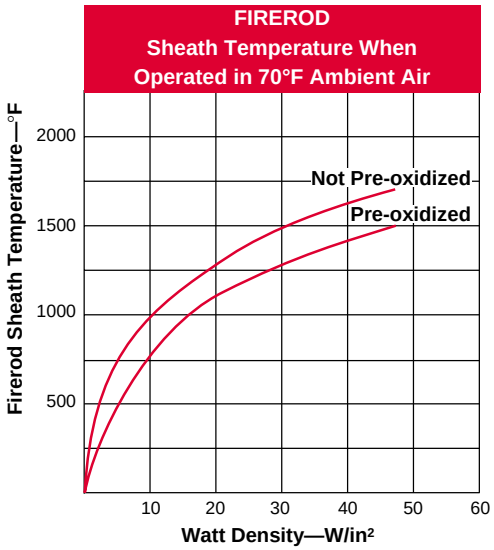

Sheath Temperature in Ambient Air

The *Sheath Temperature in Ambient Air* graph indicates the watt density required to bring a pre-oxidized FIREROD to a given sheath temperature when operated in 70°F (20°C) ambient air.

At 44 W/in² (6.8 W/cm²), the sheath temperature would be 1450°F (790°C). At this temperature, one year life would be expected, provided that cycling is not too frequent.

Higher temperatures would result in reduced heater life.

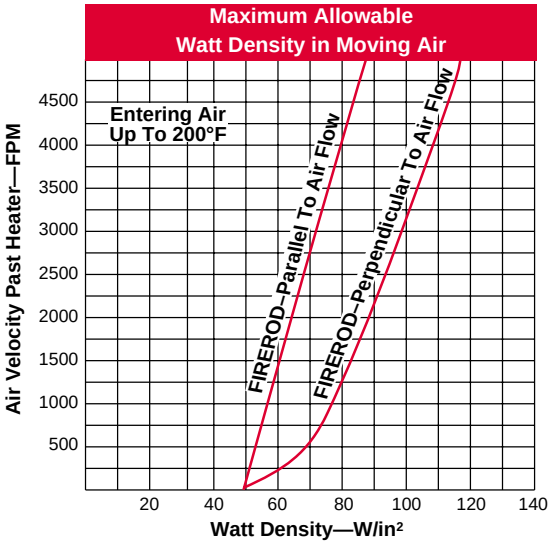

Watt Density in Moving Air

The *Watt Density in Moving Air* graph gives the maximum allowable watt density of a FIREROD in moving air.

The air movement is expressed in feet per minute (FPM). If the air flow is known in cubic feet per minute (CFM), divide the CFM by the net free area around the heater (ft²). The net free area is the total area of the enclosure minus the area occupied by the heater.

Cartridge Heaters

FIREROD

Lead and Diameter Information

Lead Specifications

Heater Diameter inches	Standard Lead Gauge Fiberglass	Lead Wire Size Tolerance Fiberglass	Standard Lead Gauge Teflon®	Lead Wire Size Tolerance Teflon®	Standard Stainless Steel Hose I.D.	Standard Stainless Steel Braid I.D.
⅛	24	0.044 - 0.058	24 solid	0.036 - 0.044	⅛	⅛
¼	22	0.079 - 0.093	22	0.046 - 0.054	⅛	⅛
⅜	22	0.079 - 0.093	20	0.054 - 0.062	7/32	¼
½	18	0.095 - 0.109	20	0.054 - 0.062	9/32	¼
⅝	18	0.095 - 0.109	18	0.064 - 0.074	⅜	¼
¾	18	0.095 - 0.109	14	0.087 - 0.101	½	⅜
1	18	0.095 - 0.109	14	0.087 - 0.101	N/A	N/A

Lead length tolerances: 1 inch to 36 inches = -½ inch, +1½ inches; > 36 inches to 72 inches = -1, +3 inches; > 72 inches = ±4 inches.

Stainless steel hose and braid tolerances: same as lead wire.

Units constructed with 480 volts require MGT leads. If connecting heaters in series above 300 volts, MGT leads are also required.

Ratings: GGS, 300V, 480°F (250°C)
MGT, 600V, 840°F (450°C)
Teflon®, 600V, 400°F (205°C)
Silicone Rubber, 600V, 300°F (150°C)

Lead Gauge	Nickel Ampacity	N.C.C. Ampacity	SPC/NPC
26	2.5	4.2	6.0
24 stranded	3.1	5.2	7.5
24 solid	3.1	5.2	7.5
22	4.4	7.2	10.5
20	N/A	N/A	14.0
18	7.6	12.6	18.0
16	9.7	16.1	23.0
14	12.5	21.0	30.0
12	16.8	28.0	40.0
10	23.0	38.5	55.0

Dimensional Data

The *Dimensional Data* table gives minimum/maximum lengths for available FIREROD diameters.

FIREROD Diameter			Length			
Nominal	Actual		Minimum		Maximum	
inches	inches	(mm)	inches	(mm)	inches	(mm)
⅛	0.122	(3.10)	1 ¼	(32)	12	(305)
¼	0.246	(6.25)	⅞	(22)	36	(915)
⅜	0.371	(9.42)	⅞	(22)	48	(1,220)
½	0.496	(12.60)	⅞	(22)	60	(1,520)
⅝	0.621	(15.77)	1	(25)	72	(1,830)
¾	0.746	(18.95)	1	(25)	72	(1,830)
1	0.996	(25.30)	1 ¼	(32)	72	(1,830)

Indicates **recommended** maximum length; however longer lengths are available.

Teflon® is a registered trademark of E.I. du Pont de Nemours & Company.

FIREROD

Non LA Stock

Modification Coding

Watlow offers heaters in various diameters, lengths and volt-wattage combinations that are ready for shipping. Stock heaters are listed on **pages 97-107**. Any stock heaters can have basic modifications made and shipped the same day. These modifications include flanges, threaded fittings, locating rings, elbows, couplers, ceramic beads and leads. The following is a list of all available non LA modifications and their code numbers.

Mounting Option Codes

BA	Small flange FS (available on ¼", ⅜", ½")
BB	Medium flange FM (available on ¼", ⅜", ½", ⅝", ¾")
BC	Large flange FL (available on ⅝", ¾")
BD	Locating rIng (available on ¼", ⅜", ½", ⅝", ¾")
BE	Single brass fitting
BF	Double brass fitting
BG	Single stainless steel fitting
BH	Double stainless steel fitting
BY	Stainless steel reversed
BZ	Brass reversed

Lead Protection Option Codes

CC	Straight coupler	—	BX			
CD	Right angle elbow	—	BX			
CE	Straight coupler	—	stainless steel hose			
CF	Right angle elbow	—	stainless steel hose			
CJ	Straight coupler	—	BX	—	solder coupler to heater	
CK	Straight coupler	—	BX	—	solder coupler to BX	
CL	Straight coupler	—	BX	—	solder coupler to BX and heater	
CM	Right angle elbow	—	BX	—	solder elbow to heater	
CN	Right angle elbow	—	BX	—	solder elbow to BX	
CP	Right angle elbow	—	BX	—	solder elbow to BX and heater	
CR	Straight coupler	—	stainless steel hose	—	solder coupler to heater	
CS	Straight coupler	—	stainless steel hose	—	solder coupler to hose	
CT	Straight coupler	—	stainless steel hose	—	solder coupler to hose and heater	
CU	Right angle elbow	—	stainless steel hose	—	solder elbow to heater	
CV	Right angle elbow	—	stainless steel hose	—	solder elbow to hose	
CW	Right angle elbow	—	stainless steel hose	—	solder elbow to hose and heater	
CX	Straight coupler	—	stainless steel braid	—	⅛" diameter only	
CY	Straight coupler	—	stainless steel hose	—	⅛" diameter only	

Example:

J10A52- CT 12 L 72

Option Code — CT
Lead protection length — 12
Must be used to call out Leads — L
Lead length — 72

Pin Option Codes

AA	Short pins 5/16"
AB	Medium pins ⅝"
AC	Long pins 1¾
AD	Stagger pins
AE	Ceramic beads ½"
AF	Ceramic beads ¾"
AG	Ceramic beads 1"
AH	Ceramic beads 1¼"
AJ	Ceramic beads 1½"

Note: Mounting options are located on the last ¼ inch of all non-LA stock units

Cartridge Heaters

FIREROD

Non LA Stock

Termination Options

Modified Stock Straight and Right Angle Galvanized BX Conduit

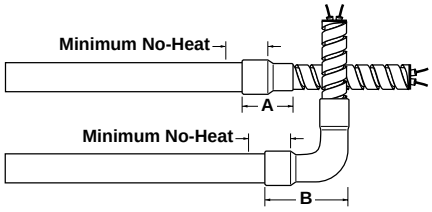

Galvanized BX conduit equals stainless steel hose in its abrasion protection. The conduit is attached with either a crimped-on straight or 90 degree elbow copper coupling which overlaps the heater sheath.

The ¼-inch diameter FIRERODs use stainless steel hose instead of conduit. On one-inch (25 mm) diameter FIRERODs, only flexible galvanized hose is used.

Modified Stock units may be ordered either with copper coupler/elbow and BX conduit or stainless steel hose. To order, specify **BX conduit** or **stainless steel hose** as well as straight or right angle coupler, conduit/hose length and lead lengths.

Unless specified, 12-inch (305 mm) hose or conduit is supplied. Leads are two inches (51 mm) longer than hose.

BX Conduit

Coupler utilizes BX conduit or SS hose.

Heater Diameter inches	Straight A Dimension inches	(mm)	Right Angle B Dimension inches	(mm)	BX O.D. inches	(mm)	Hose O.D. inches	(mm)
¼	⅞	(22)	1 1/16	(27)	— ①	—	⅜	(10)
⅜	1	(25)	1 ⅜	(35)	½	(13)	⅜	(10)
½	1 3/16	(30)	1 ⅝	(41)	9/16	(14)	½	(13)
⅝	1 ¼	(32)	2 1/16	(52)	9/16	(14)	⅝	(16)
¾	1 ½	(38)	2 ⅛	(54)	9/16	(14)	⅝	(16)

① ¼ inch diameter unit uses SS hose only.

Galvanized BX conduit is available on Modified Stock units. It is also available on Stock/Standard FIRERODs in combination with LA swaged-in flexible leads, as well as LA Teflon® and silicone rubber seals and leads.

On Modified Stock, insert length = overall length of heater - ¼ inch.

Note: If the heater diameter you need is not shown on the chart, Watlow will manufacture to your specifications.

Quick Ship • *Same day shipment on many stock options.*

Cartridge Heaters

FIREROD

LA Stock

Termination Options

Patented LA—or Lead Adaptor—Modification Method

1000°F maximum on LA cap

Watlow has developed a patented Lead Adaptor (LA) program for customers in need of heaters quickly. The LA program takes a stock heater adds leads and lead protection, if requested. The LA adder has a standard 12 inches (305 mm) of protection and 14 inches (356 mm) of leads, but additional length can be added. The leads and protection can also be attached in a right angle configuration for applications with restricted space.

LA configurations are permanently attached to the heater. Most configurations can be ordered with no-heat extensions. These can also have mounting options including flanges, threaded fittings or locating rings.

LA adders can be used on either stock heaters or made-to-order heaters. The LA adders usually take one to three days to ship.

To configure a FIREROD with swaged-in leads, Watlow:

- Cuts the pins off flush with the end piece and prepares the surface for drilling.
- Drills the heater.
- Connects the lead wires, and then places an LA cap over the lead end of the heater.
- Swages the heater to produce a rugged unit with swaged-in leads.

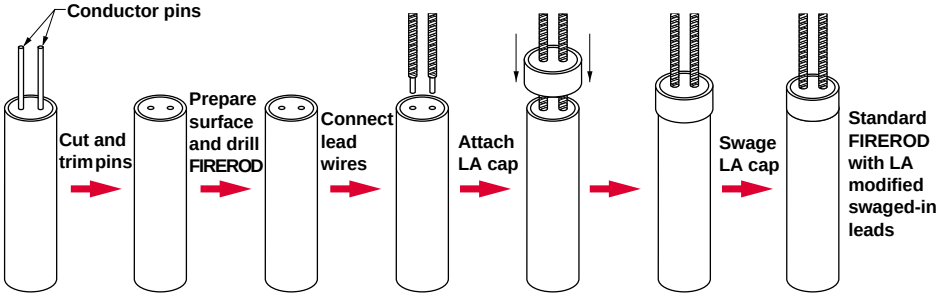

LA options available on ⅜ inch to ¾ inch diameters.

Note: Limited LA options available on ¼ inch diameter.

Maximum temperature of LA cap is 1000°F (538°C) except for MI leads option.

Cartridge Heaters

FIREROD

LA Stock

Termination Options

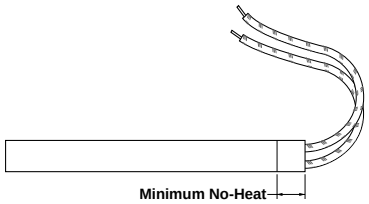

LA Swaged-in Flexible Leads

LA swaged-in flexible leads are used in applications where a high degree of flexing exists or the leads must be bent sharply adjacent to the heater without exposing or breaking the conductor. The stranded wire leads are connected internally and exit through the lead end. The overall length of the heater is extended by 3⁄16 inch (5 mm).

To order, specify **length adder code D** bringing the total disk end no-heat to 7⁄16 inch.

This LA option is not available on ⅛ inch (3 mm) diameter. On ⅛ inch (3 mm) diameter FIRERODs, leads are connected externally using a solid conductor lead wire. If stranded wire is desired on ⅛ inch (3 mm) diameter units, consult factory.

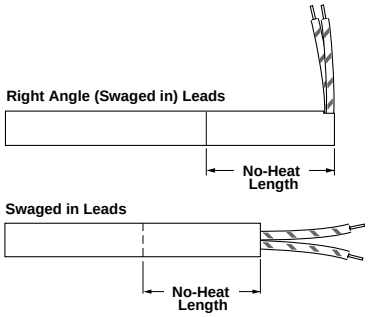

No-Heat Extensions

No-heat extensions are recommended in applications where leads may be exposed to excessive heat, thus requiring a cooler lead end. Also used when heat is not required along the entire length of the FIREROD.

No-heat extensions are available for most LA stock options in diameters of ⅜, ½, ⅝ and ¾ inch (9, 13, 16 and 19 mm). These extensions are designed to provide a total no-heat length of 1, 1½, 2 or 2½ inches (25, 38, 51 or 65 mm) at the lead end of stock FIRERODs only. Consult factory for available LA options.

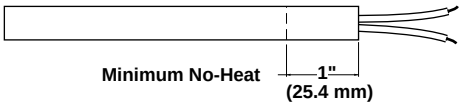

LA Teflon® Seal and Leads

LA Teflon® seal and leads protect the heater against moisture/contamination from lubricating oil, cleaning solvents, plastic material or fumes and organic tapes. This seal is effective to 400°F (205°C) under continuous operation.

Please note when ordering this option, that a minimum no-heat section is required to allow for construction. Additional no-heat may be required to keep the seal below effective temperatures. The minimum lead end no-heat is one inch. The LA cap adds ¾ inch (19 mm) to the overall length of the heater. To order, specify **option code T**.

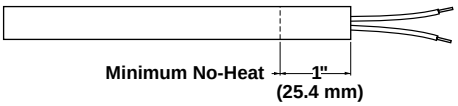

LA Silicone Rubber Seal and Leads

LA silicone rubber seal and leads protect the heater against moisture/contamination from lubricating oil, cleaning solvents, plastic material or fumes and organic tapes. This seal is effective to 450°F (230°C) under continuous operation.

Please note when ordering this option, that a minimum no-heat section is required to allow for construction. Additional no-heat may be required to keep the seal below effective temperatures. The minimum lead end no-heat is one inch. The LA cap adds ¾ inch (19 mm) to the overall length. To order, specify **option code P**.

Cartridge Heaters

FIREROD

LA Stock

Termination Options
Continued

Mineral Insulated Leads

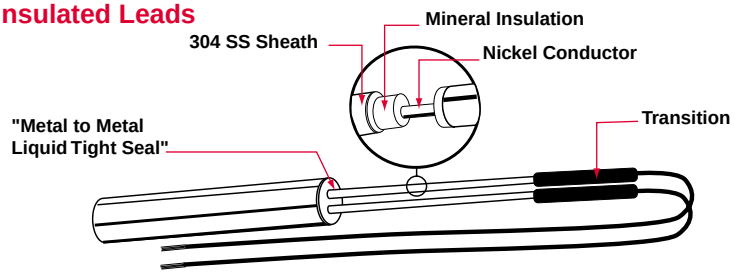

MI leads handle both high temperatures and contamination, and resist other problems like abrasion and excessive vibration. The metal seal and swaged-in, formable MI cable leads are capable of handling temperatures up to 1500°F (815°C). In addition, the lead end seal resists moisture and other forms of contamination, including gases, oils, plastic drool, solvents and water.

Features and Benefits

- **Increased heater life**.
- **Less down time**.
- **No need for a soft start** due to moisture penetration.
- **Ability to use a cartridge heater where not possible before**.
- **Abrasion and vibration resistant**.
- **Able to be formed or bent** to fit the contours of wiring raceways.
- **No additional insulation of lead wires is needed** to protect against high temperatures.
- **Lead cables and seal will not out-gas** in vacuum environments.

The Watlow FIREROD with the patented MI lead and seal option is covered by a two-year limited warranty. This extended warranty for this product only applies to manufacturing defects or failures due to over-temperature or product failure due to contamination.

This LA option is also available as a manufactured item. Specify MI leads and seal, as well as volts, watts, cable length, lead length and type. Six inches of MI cable and 12 inches (305 mm) of Teflon® leads will be supplied unless otherwise specified. To order, specify **option code J.**

Applications

- Vacuum forming
- Plastic molding
- Medical instrument manufacturing
- Food handling equipment
- Zinc die-casting

Heater Diameter inches	Maximum Current amps	Conductor Diameter inches	Cable Diameter inches	Transition Diameter inches	Cable Length min inches	Cable Length max inches	Minimum Bend Radius	Maximum Voltage inches	Length Adder
⅜	7.0	0.044	0.108	0.230	6	72	0.225	240	G(3/8)
½	7.0	0.044	0.108	0.230	6	72	0.225	240	K(9/16)
⅝	9.7	0.062	0.138	0.250	6	72	0.280	240	L(5/8)
¾	9.7	0.062	0.138	0.250	6	72	0.280	240	L(5/8)

The above information pertains to standard FIREROD heaters. However, variations in these parameters may be accommodated to suit specific customer needs.

Technical Data

Max. temp. of cable: 1500°F

Max. temp. of cable to lead transition: 300°F
(where flexible leads attach to cable)

Cable sheath material: 304 SS

Conductor material: Nickel

Maximum voltage: 240V

Lead Types

Teflon® (400°F/205°C) – T

Silicone Rubber (300°F/150°C) – S

GGS (480°F/250°C) – No code

MGT (840°F/450°C) – H

Cartridge Heaters

FIREROD

LA Stock

Straight Protection Options

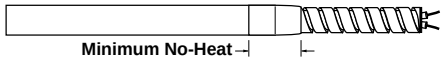

LA Straight Stainless Steel Hose

LA straight stainless steel hose provides the best protection against abrasion from sharp edges. It also offers ease of handling and wiring in abrasive environments. Unless specified a 12-inch (305 mm) hose is supplied. Leads are two inches (51 mm) longer than hose.

Minimum lead end no-heat required is ⅝ inch (16 mm). Option adds ⅜ inch (9 mm) to overall length on stock units.

To order, specify **option code H**.

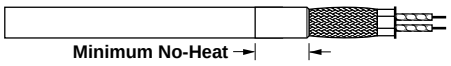

LA Straight Stainless Steel Braid

LA straight stainless steel braid is designed to protect leads from abrasion against sharp edges. It is the most flexible of Watlow's protective lead arrangements.

Unless specified a 12-inch (305 mm) braid is supplied. Leads are two inches (51 mm) longer than braid.

Minimum lead end no-heat required is ⅝ inch (16 mm). Option adds ⅜ inch (9 mm) to overall length on stock units.

To order, specify **option code C**.

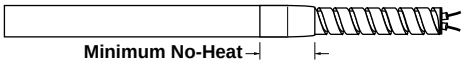

LA Straight Stainless Steel Hose with Teflon® Leads and Seal

LA straight stainless steel hose with Teflon® leads and seal provides the ultimate combination of abrasion protection and a moisture resistant seal. Unless specified a standard 12-inch (305 mm) hose is supplied.

Leads are two inches (51 mm) longer than hose.

Minimum lead end no-heat required is ¾ inch (19 mm). Option adds ½ inch (13 mm) to overall length on stock units.

To order, specify **option code G**.

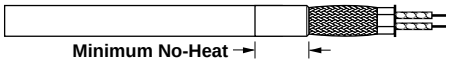

LA Straight Stainless Steel Braid with Teflon® Leads and Seal

LA straight stainless steel braid with Teflon® leads and seal provides Waltow's most flexible lead protection with a moisture resistant seal. Unless specified a 12-inch (305 mm) braid is supplied. Leads are two inches (51 mm) longer than the braid.

Minimum lead end no-heat required is ¾ inch (19 mm). Option adds ½ inch (13 mm) to overall length on stock units.

To order, specify **option code F**.

FIREROD

LA Stock

Right Angle Options

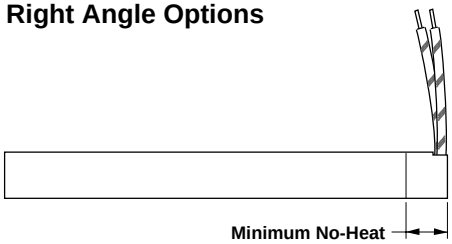

LA Right Angle Leads

LA right angle leads are used in applications with a high degree of flexing and when space limitations are critical. Stranded lead wires are connected internally (swaged-in) and exit at a 90 degree angle at the end of the heater.

To order, specify **option code R**.

To order right angle leads with Teflon® leads and seals, specify **option code B**.

Minimum No-Heat Required inches					
Dia.	¼	⅜	½	⅝	¾
Inches	11/16	⅝	11/16	11/16	11/16

Note: Option is not available on ¼ inch (6 mm) diameter.

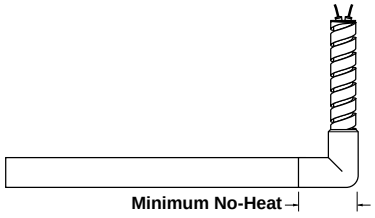

LA Right Angle Stainless Steel Hose

LA right angle stainless steel hose is provided for wiring convenience. Like the LA straight stainless steel hose, it protects leads from abrasion against sharp edges. Unless specified, 12-inch (305 mm) hose is supplied. Leads are two inches (51 mm) longer than hose.

To order, specify **option code W**.

Minimum No-Heat Required inches					
Dia.	¼	⅜	½	⅝	¾
Inches	N/A	¾	13/16	13/16	1

Note: Option is not available on ¼ inch (6 mm) diameter.

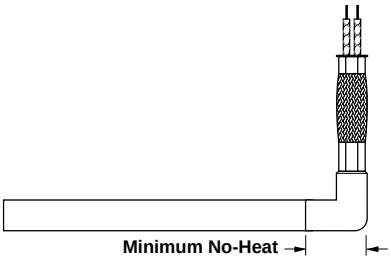

LA Right Angle Stainless Steel Braid

LA right angle stainless steel braid is provided for wiring convenience. Like the LA straight braid, it protects leads from abrasion against sharp edges.

Unless specified, 12-inch (305 mm) braid is supplied. Leads are two inches (51 mm) longer than braid.

To order, specify **option code Y**.

Minimum No-Heat Required inches					
Dia.	¼	⅜	½	⅝	¾
Inches	N/A	¾	13/16	13/16	1

Note: Option is not available on ¼ inch (6 mm) diameter.

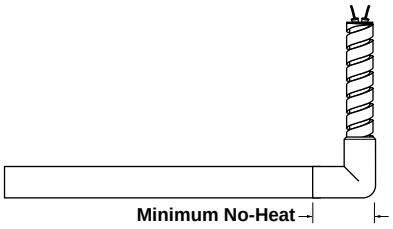

LA Right Angle Stainless Steel Hose with Teflon® Leads and Seal

LA right angle stainless steel hose with Teflon® leads and seal provides the ultimate combination of abrasion protection and a moisture resistant seal with wiring convenience. Unless specified, a 12-inch (305 mm) hose is supplied. Leads are two inches (51 mm) longer than hose.

Minimum lead end no-heat required is 1½ inch (38 mm). Option adds 1¼ inch (32 mm) to overall length on stock units.

To order, specify **option code M**.

Note: Option is not available on ¼ inch (6 mm) diameter.

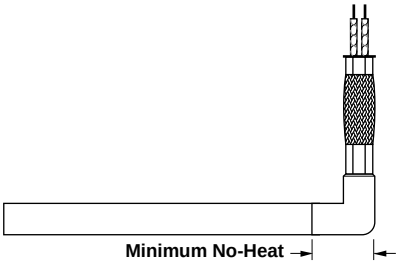

LA Right Angle Stainless Steel Braid with Teflon® Leads and Seal

LA right angle stainless steel braid with Teflon® leads and seal provides Waltow's most flexible lead protection and moisture resistant Teflon® seal with wiring convenience. Unless specified a 12-inch (305 mm) braid is supplied. Leads are two inches (51 mm) longer than the braid.

Minimum lead end no-heat required is 1½ inch (38 mm). Option adds 1¼ inch (32 mm) to overall length on stock units.

To order, specify **option code A**.

Note: Option is not available on ¼ inch (6 mm) diameter.

Cartridge Heaters

FIREROD

LA Stock

Mounting Options

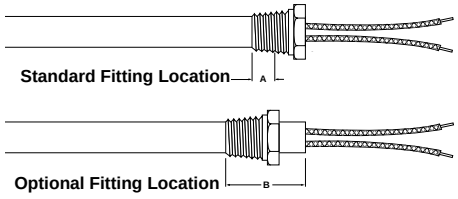

Fitting overlaps the unheated section and is soldered to the sheath.

LA Stock Threaded Fittings

Threaded fittings allow for fast, water-tight installation of the heater into a threaded hole. These fittings can be ordered in either brass or 304 stainless steel. Other stainless steel alloys are available upon request. Double threaded fittings are also available.

To order, specify either **brass** or **stainless steel threaded fittings**.

On LA stock give location of fittings, if no-heat extension option is requested. Specify location from disc end to bottom of threads.

Lead Arrangement	STD Fitting ① Location Dimension A inches	(mm)
Crimped Leads	¼	(6)
Swaged in Leads	5⁄16 ②④	(8)
STR SS Hose	½ ③	(13)
STR SS Braid	½	(13)
Teflon® Seal & LDS	⅞	(22)
Silicone Seal & LDS	⅞	(22)

① The location of the threaded fitting from thread end of fitting to the lead end of heater.

All optional fitting locations are available only with LA Stock no-heat extensions. Consult the Watlow factory in St. Louis, Missouri, for details.

② On ¼ inch diameter FIREROD only "A" dimension is 7⁄16 inch (11 mm).

③ On ¼ inch diameter FIREROD only "A" dimension is ⅝ inch (16 mm).

④ On ⅝ inch and ¾ inch the fitting is located at ⅞ inch from lead end using a ¾ no-heat extension. In order to locate at 5⁄16 inch the fitting must be epoxied.

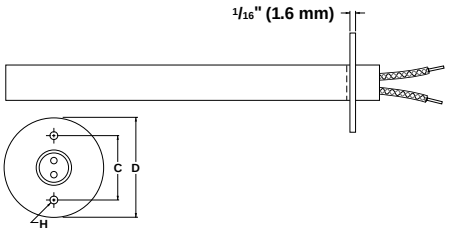

Flanges

Stainless steel flanges are a convenient mounting method as well as a way to position a heater within an application. The standard flange is staked on and located ¼ (6 mm) inch from the LE. The flange can be located up to 2¼ inches (57 mm) from the LE as long as it is over a no-heat section. Use this option in combination with most LA configurations.

To order, specifiy **flange**, size and locations.

Flange Specifications

FIREROD Diameter inches	Flange Size	inches D	C	H
¼, ⅜, ½	FS	1	¾	0.144
¼, ⅜, ½ ⅝, ¾	FM	1 ½	1 ⅛	0.156
⅝, ¾, 1	FL	2	1 ½	0.201

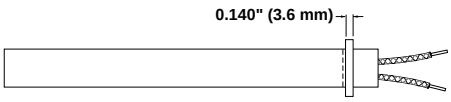

Locating Ring

A stainless steel locating ring can be used as a retaining collar to position a FIREROD if mounting requirements are not critical.

On LA Stock, give location if the no-heat extension option is requested. On in-stock FIRERODs without an LA option, location will be on the last ¼ inch (6 mm). To order, specify **locating ring**.

Locating Ring Specifications

Minimum No-Heat Required inches				
Diameter	⅜	½	⅝	¾
Ring O.D.	⅝	¾	⅞	1

Cartridge Heaters

FIREROD

LA Stock

LA Build-a-Code Number

___-___ ___ ___

Stock Code Number
See List

Length Adder Code
See Below

Option Code
See Below

Lead Length ①

Example:

J12A89 - K W 74

Code Number

Length Adder Code

Option Code

Lead Length

① Lead length will be two inches (51 mm) longer than braid or hose unless otherwise specified on the order.

Option	Minimum Length Adders Per Diameter Per Option inches					Option Code
Heater Diameter	¼	⅜	½	⅝	¾	
Swaged-in Leads	D (3/16)	D (3/16)	D (3/16)	D (3/16)	D (3/16)	None
Right Angle Leads	H (7/16)	G (⅜)	H (7/16)	H (7/16)	H (7/16)	R
Teflon® Seal and Leads	— —	N (¾)	N (¾)	N (¾)	N (¾)	T
Right Angle Teflon® Seal and Leads	— —	1E (1¼)	1E (1¼)	1E (1¼)	1E (1¼)	B
Silicone Seal and Leads	— —	N (¾)	N (¾)	N (¾)	N (¾)	P
Straight Hose	G (⅜)	G (⅜)	G (⅜)	G (⅜)	G (⅜)	H
Right Angle Hose	— —	J (½)	K (9/16)	K 9/16)	N (¾)	W
Straight Hose with Teflon® Seal and Leads	— —	J (½)	J (½)	J (½)	J (½)	G
Straight Braid	G (⅜)	G (⅜)	G (⅜)	G (⅜)	G (⅜)	C
Right Angle Braid	— —	J (½)	K (9/16)	K (9/16)	N (⅜)	Y
Right Angle Braid with Teflon® Seal and Leads	— —	M (11/16)	N (¾)	P (13/16)	R (⅞)	A
SJO Cord	— —	— —	N (¾)	N (¾)	— —	S

LA options are available on all stock FIERODs, except ⅛ inch diameter. To order any of these options, please build the order number by specifying Watlow code number, length adder code, option code and lead length.

Ordering Example: The order number **J12A89-K72W74** indicates you have ordered a 12 inch (305 mm) FIEROD with 72 inch (1830 mm) right angle stainless steel hose and 74 inch (1880 mm) leads. The overall heater length equals 12 9/16 inches (320 mm).

Note: No-heat extensions are available for most LA options in diameters of ⅜, ½, ⅝ and ¾ inch. Consult factory for available LA options. No-heat length extensions are available in the following dimensions.

No-Heat Length Adder Codes

No-Heat Option inches	(mm)	Length Adder Code
¾	(10)	N
1 ¼	(32)	1E
1 ¾	(44)	1N
2 ¼	(56)	2E

To order any of these dimensions, please specify the applicable length adder code shown. No-heat extensions on all termination options are shipped within two to three days.

How to Order

To order Stock FIEROD cartridge heaters, specify:

- Watlow code number
- Quantity
- Options
- Lead length: If not specified, 12-inch (305 mm) crimped on leads will be shipped.

For **made-to-order** FIERODs, please specify:

- Diameter
- Overall length
- Volts
- Watts
- Lead option and length or terminal configuration
- Lead end no-heat if different from standard
- Optional accessories, finishing, internal construction, sensors/ controls and mounting

Availability

Stock: Same day shipment on many FIEROD stock options

Made-to-Order: Consult factory

Cartridge Heaters

FIREROD

Made-to-Order

Straight Options

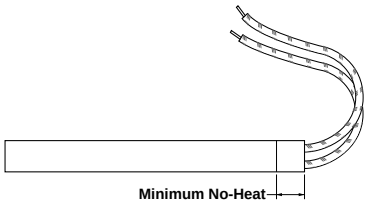

Swaged-in Flexible Leads

Swaged-in flexible leads are used in applications where a high degree of flexing exists or the leads must be bent sharply adjacent to the heater without exposing or breaking the conductor. The stranded wire leads are connected internally and exit through the lead end.

Minimum lead end no-heat required is 1 inches (24.5 mm). For heaters over 10 inches (250 mm) the minimum no-heat is 12 percent of overall length plus ¼ inch (6 mm).

To order please contact the factory.

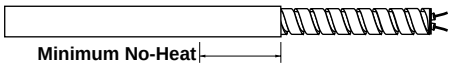

Made-to-Order Straight Stainless Steel Hose

Straight stainless steel hose provides the best protection against abrasion from sharp edges. It also offers ease of handling and wiring in abrasive environments. Unless specified a 12-inch (305 mm) hose is supplied. Leads are two inches (51 mm) longer than hose.

Minimum lead end no-heat required is 1½ inches (38 mm). For heaters over 10 inches (250 mm) the minimum no-heat is 12 percent of overall length plus ¼ inch (6 mm).

To order, specify **straight hose units 10 inches (250 mm) and under**.

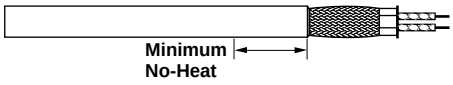

Made-to-Order Straight Stainless Steel Braid

Stainless steel braid is designed to protect leads from abrasion against sharp edges. It is the most flexible of Watlow's protective lead arrangements.

Unless specified a 12-inch (305 mm) braid is supplied. Leads are two inches (51 mm) longer than braid.

Minimum lead end no-heat required is 1½ inches (38 mm). For heaters over 10 inches (250 mm) the minimum no-heat is 12 percent of overall length plus ¼ inch (6 mm).

To order, specify **straight stainless steel braid**.

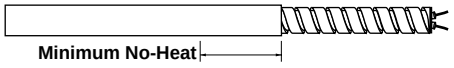

Made-to-Order Straight Stainless Steel Hose with Teflon® Leads and Seal

Straight stainless steel hose with Teflon® leads and seal for FIREROD s greater than 10 inches (250 mm) long with straight hose will have a minimum lead end no-heat required is 1½ inch (35 mm).

To order, specify **straight stainless steel hose**.

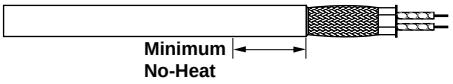

Made-to-Order Straight Stainless Steel Braid with Teflon® Leads and Seal

Straight stainless steel braid with Teflon® leads and seal for FIREROD s greater than 10 inches (250 mm) long with straight braid will have a minimum lead end no-heat required is 1½ inch (35 mm).

To order, specify **straight stainless steel braid with Teflon® leads and seal**.

Made-to-Order

Straight Options
Continued

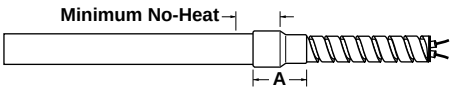

Made-to-Order Straight Galvanized BX Conduit

Galvanized BX conduit equals stainless steel hose in its abrasion protection. The conduit is attached with a crimped-on straight copper coupling which overlaps the heater sheath.

The ¼-inch (6 mm) diameter FIREROds use stainless steel hose instead of conduit. On one-inch (25 mm) diameter FIREROds, one inch O.D. flexible galvanized hose is used.

To order, specify **straight galvanized BX conduit**.

Dia. inches	No-Heat	Dim. inches	BX O.D.
¼	½	⅞	—
⅜	⅝	1	½
½	⅝	1 3/16	9/16
⅝	¾	1¼	9/16
¾	⅞	1½	9/16
1	1	1⅞	—

Right Angle Options

Made-to-Order Right Angle Leads

Made-to-order right angle leads are used when space is limited or a high degree of flexing occurs. However, these leads are externally connected (crimped) and insulated with fiberglass sleeving.

To order, specify **right angle leads** and **lead length**.

Dia. inches	Lead End Minimum No-Heat inches	(mm)
¼	7/16	(11)
⅜	½	(13)
½	⅝	(16)
⅝	¾	(19)
¾	⅞	(22)

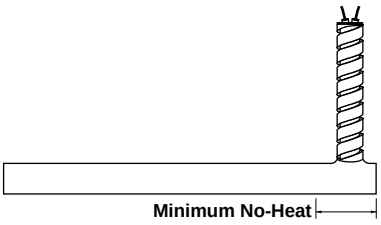

Made-to-Order Right Angle Stainless Steel Hose

Made-to-order right angle stainless steel hose, connected at a 90 degree angle, is provided for wiring convenience. Like the LA straight stainless steel hose, it protects leads from abrasion against sharp edges.

Unless specified, 12-inch (305 mm) hose is supplied. Leads are two inches (51 mm) longer than hose.

Option is also available with Teflon® leads and seal. To order, specify **right angle stainless steel hose**.

Dia. inches	Lead End Minimum No-Heat inches	(mm)
⅜	⅝	(16)
½	3/16	(21)
⅝	⅞	(22)
¾	1⅛	(29)

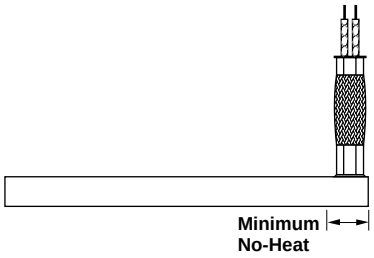

Made-to-Order Right Angle Stainless Steel Braid

Made-to-order right angle stainless steel braid, connected at a 90 degree angle, is provided for wiring convenience. Like the LA straight stainless steel braid, it protects leads from abrasion against sharp edges.

Unless specified, 12-inch (305 mm) braid is supplied. Leads are two inches (51 mm) longer than braid. Option is also available with Teflon® leads and seal. To order, specify **right angle stainless steel braid**.

Dia. inches	Lead End Minimum No-Heat inches	(mm)
⅜	⅝	(16)
½	3/16	(17)
⅝	⅞	(22)
¾	1⅛	(29)

Cartridge Heaters

FIREROD

Made-to-Order

Right Angle Options
Continued

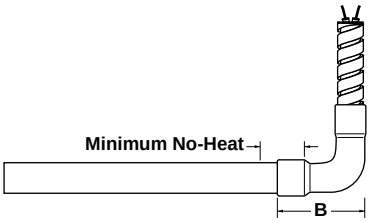

Made-to-Order Right Angle Galvanized BX Conduit

Galvanized BX conduit equals stainless steel hose in its abrasion protection. The conduit is attached with a crimped-on 90 degree elbow copper coupling which overlaps the heater sheath.

The ¼-inch diameter FIREROD s use stainless steel hose instead of conduit. On one-inch (25 mm) diameter FIREROD s, one inch O.D. flexible galvanized hose is used.

Dia. inches	No-Heat	Dim. inches	BX O.D.
¼	½	1 1/16	—
⅜	⅝	1⅜	½
½	⅝	1⅝	9/16
⅝	¾	2 1/16	9/16
¾	⅞	2⅛	9/16
1	1	2⅛	—

Moisture Resistant Seals

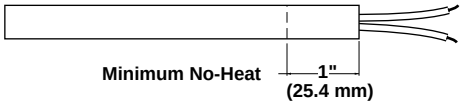

Teflon® Seal and Leads

Made-to-order Teflon® seal and leads protect the heater against moisture/ contamination from lubricating oil, cleaning solvents, plastic material or fumes and organic tapes. This seal is effective to 400°F (205°C) under continuous operation.

Teflon® seal and leads for made-to-order FIREROD s greater than 10 inches (250 mm) long will have a minimum unheated section of approximately 12 percent of the overall length. Longer no-heat sections are available if required.

Additional no-heat may be required to keep the seal below its maximum operating temperature.

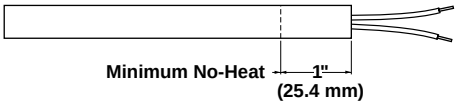

Silicone Rubber Seal and Leads

Made-to-order silicone rubber seal and leads protect the heater against moisture/ contamination from lubricating oil, cleaning solvents, plastic material or fumes and organic tapes. This seal is effective to 450°F (230°C) under continuous operation.

Silicone rubber seal and leads for made-to-order units greater than 10 inches (250 mm) long will have a minimum unheated section of approximately 12 percent of the overall length. Longer no-heat sections are available if required.

Made-to-Order

Termination Options

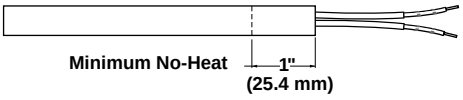

Epoxy Seal

Epoxy seals help protect the heater against moisture/contamination from lubricating oil, cleaning solvents, plastic material or fumes and organic tapes. These seals are effective to 500°F (260°C) under continuous operation.

Epoxy seals can be ordered only on units greater than ⅛ inch (3 mm) diameter with crimped on leads. Minimum unheated section at the lead end is one inch (25 mm). Longer unheated sections are available upon request.

To order, specify **epoxy seal**.

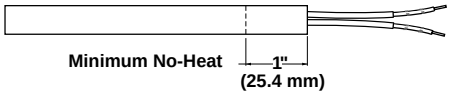

Hermetic Seal

Hermetic seals protect the heater against moisture/contamination from lubricating oil, cleaning solvents, plastic material or fumes and organic tapes. These seals are effective to 650°F (345°C) under continuous operation. Hermetic seals are supplied in units of ¼, ⅜ and ½ inch (6, 9 and 13 mm) diameter with 12 inch (305 mm) crimped on leads. The overall heater length is limited to nine inches (230 mm).

Minimum unheated section at lead end is one inch (25 mm). Longer unheated sections are available upon request.

To order, specify **hermetic seal**.

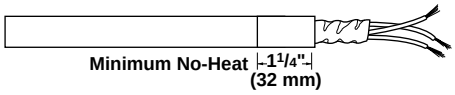

SJO Cord

SJO cord is used in low temperature applications where lead wires require protection against moisture or when UL® listed plugs are needed. This cord is limited to 140°F (60°C) under continuous operation.

FIRERODs greater than 10 inches (250 mm) long will have a minimum no-heat section of approximately 12 percent + ¼ inch (6 mm) of the overall length.

To order, specify either **two conductor or three conductor** as well as **overall length**.

Passivation

During the manufacturing and handling of stainless steel, particles of iron or tool steel may be embedded in the sheath. If not removed, these particles may corrode and produce rust spots. In critical sheath contact applications, like the medical industry, passivation will remove free iron from the sheath. To order, specify **316L stainless steel sheath** and **passivation**.

Cartridge Heaters

FIREROD

Made-to-Order

Termination Options
Continued

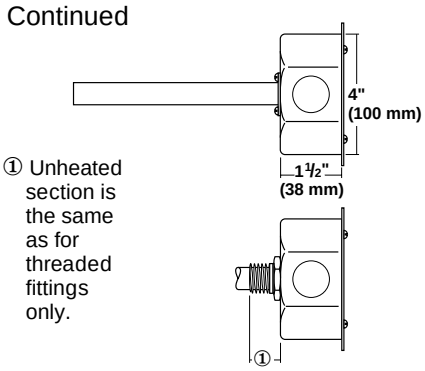

① Unheated section is the same as for threaded fittings only.

Terminal Box

A four inch (100 mm) NEMA 1 octagonal terminal box is mounted on a flange or a threaded fitting. Boxes have ½ inch (13 mm) conduit knockouts for electrical connection.

Hazardous location (NEMA 4 and NEMA 7) terminal boxes are also available. Consult your Watlow sales engineer or authorized distributor for details. Terminal boxes are available on ½ inch (13 mm) through one inch (25 mm) diameter FIRERODs. To order, specify **terminal box** and **NEMA type**.

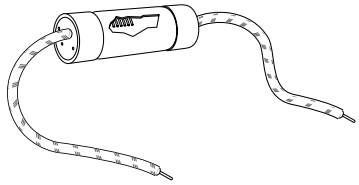

Lead Out Each End

One power lead exiting out each end is used in applications with special wiring requirements.

This configuration is not available on all options. Consult the Watlow factory in St. Louis, Missouri, for additional information.

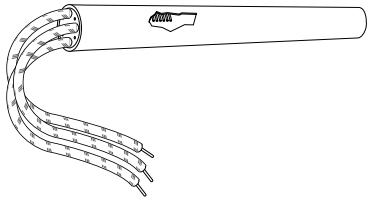

Ground Lead

Ground leads are a safety feature to protect both workers and equipment. This configuration is not available on all options. Consult the Watlow factory in St. Louis, Missouri, for additional information. To order, specify **ground lead**.

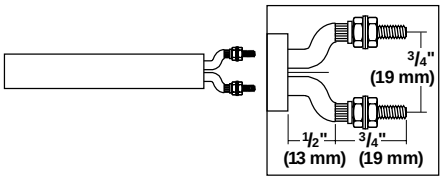

Post Terminals

Post terminals provide a quick, secure connection with ring or fork connectors, or bus bars. Threaded 6-32 studs are soldered to the solid power pins. Nuts and washers are provided.

Post terminals are available on FIRERODs of ½, ⅝, ¾ and one inch (13, 16, 19 and 25 mm) diameter. On one inch (25 mm) diameters, pins are straight. To order, specify **post terminals**.

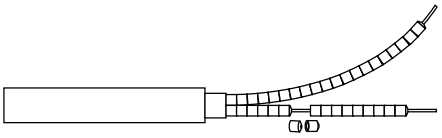

Ceramic Bead Insulation

Ceramic bead insulation protects the leads from high ambient temperatures above 840°F (450°C).

The beads fit over solid conductors that are extended long enough to reach a cooler area where flexible wires can be attached.

This option is not available on ⅛ inch (3 mm) diameter. The maximum available length on stock FIRERODs is 1½ inches (38 mm). To order, specify **ceramic beads** and length, and additional lead length.

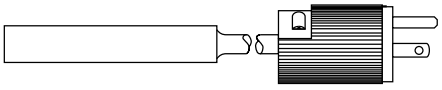

UL® Listed Plugs

UL® listed plugs are a safe, convenient method of installation, especially when frequent connection or disconnection is required. These plugs have a nylon dead front, a molded-in cord grip and either straight or Twist-Lock® blades with or without ground.

Use UL® listed plugs with stainless steel hose, conduit, braid or lead wires with sleeving. To order, specify **UL® listed plugs**.

Twist-Lock® is a registered trademark of Hubbell Incorporated.

Made-to-Order

Options

Thermocouple Types

ASTM Code	Conductor Characteristics		Temperature Range °F (°C)
	Positive	Negative	
J	Iron (Magnetic) (White)	Constantan (Non-Magnetic) (Red)	0 to 1400 (-20 to 760)
K	Chromel® (Non-Magnetic) (Yellow)	Alumel® (Magnetic) (Red)	0 to 2300 (-20 to 1260)

For other ISA types, contact the Watlow factory in St. Louis, Missouri.

Style A

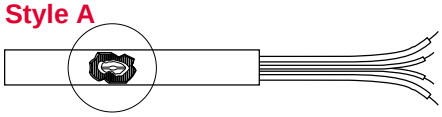

Style B

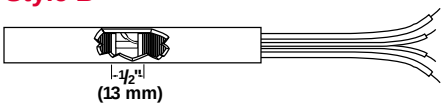

Style C

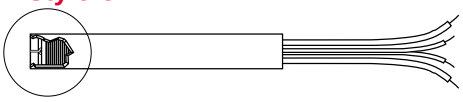

Internal Thermocouple

A Style A internal thermocouple can be used to evaluate heat transfer efficiency of an application … a measure that enables you to cut energy costs and increase heater life. This junction is located in the heater core to monitor the internal temperature of the heater.

The Style B internal thermocouple gives a good approximation of part temperature and can be located anywhere along the length of the heater. This style may be grounded or ungrounded.

This junction is located adjacent to the inside heater sheath in the center of the heated section unless other wise specified. A ½ inch (13 mm) unheated section is required.

A Style C internal thermocouple is useful in applications where material flows past the end of the heater, as in plastic molding. This junction is embedded in a special end disc. Unless requested, the disc end is not mechanically sealed.

To order, specify **internal thermocouple**, **Style A, B** or **C** and **thermocouple ASTM Type J** or **K**.

If not specified, 12 inch (305 mm) power and thermocouple leads are supplied.

Availability

All styles are available on all diameters with the exception of ⅛ inch (3 mm) diameter, which is available only with Style C.

Low Electrical Leakage

This construction technique minimizes current leakage of the heating element. It is especially useful in critical applications, like the medical field where low set point ground fault interrupts are used.

Low electrical leakage is available on ⅜, ½, ⅝ and ¾ inch (9, 13, 16 and 19 mm) diameter FIRERODs. To order, specify **low electrical leakage**.

Alumel® and Chromel® are registered trademarks of Hoskins Manufacturing Co.

Cartridge Heaters

FIREROD

Made-to-Order

Options
Continued

Internal Construction

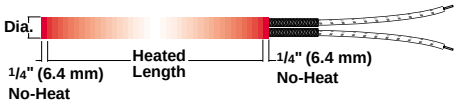

Distributed Wattage

Distributed wattage varies the watt density along the length of the heater. This construction technique is used to compensate for heat losses along the edges of heated parts. This is ideal for seal bar applications.

To order, specify **distributed wattage** and give the length and wattage for each section.

Individually Controlled Heat Zones

Individually controlled heat zones give the flexibility of controlling temperature by zones, along the length of the FIREROD. This is an advantage for heating requirements of certain applications, like sealing bars. This internal construction can be ordered on ⅝, ¾ and one inch (16, 19 and 25 mm) diameter FIRERODs. To order, specify **individually controlled heat zones** as well as wattage and length per zone.

Dual Voltage

When the FIREROD requires the flexibility of operating on two voltages, use this internal construction. Dual voltage is not compatible for all lead options. Consult the Watlow factory in St. Louis, Missouri, for availability. To order, specify **dual voltage** and voltage requirements.

Bent FIREROD

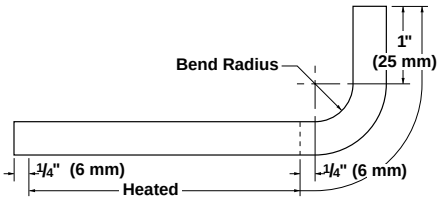

FIREROD Diameter in	Minimum Required No-Heat Length in (mm)	Bend Radius in (mm)
¼	2 ¼ (56)	½ (13)
⅜	2 ⅜ (60)	½ (13)
½	2 ⅞ (72)	¾ (19)
⅝	3 5/16 (83)	1 (25)
¾	3 13/16 (98)	1 ¼ (32)

In applications where the leads must exit at an angle, a bend can be made in the unheated section only. Heated sections may be on either side of the bend. It is recommended that the heater be bent at the Watlow factory.

A 304 stainless steel sheath is used on bent FIRERODs. If the sheath temperature exceeds 1000°F (540°C), consult your Watlow sales engineer or authorized distributor.

See dimensions noted on the chart, or contact the Watlow factory in St. Louis, Missouri, if you need to exceed limitations shown.

Centerless Grinding

FIREROD Diameter inches	Actual Precision Diameter inches
¼	0.241 ± 0.0005
⅜	0.363 ± 0.0005
½	0.488 ± 0.0005
⅝	0.613 ± 0.0005
¾	0.738 ± 0.0005
1	0.984 ± 0.0005

Centerless grinding can be used to furnish precision diameters, thus permitting closer heater-to-part fit. Therefore, higher watt densities can be used.

For centerless ground heaters, the heater must either have Teflon® leads and seal (maximum 12 inch lead length) or have crimped on leads. Longer lead lengths are available, but require external connection. The length of a FIREROD available for centerless grinding is dependent on the construction, please consult factory for assistance. To order, specify **centerless grinding**.

Cartridge Heaters

FIREROD

Made-to-Order

Mounting Options

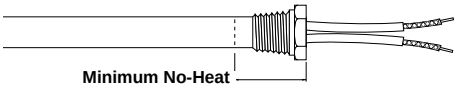

Mounted at lead end, unless otherwise specified and welded or silver soldered, depending upon construction.

Threaded Fittings

Threaded fittings allow for fast, water-tight installation of the heater into a threaded hole. These fittings can be ordered in either brass or 304 stainless steel. Other stainless steel alloys are available upon request. Double threaded fittings are also available.

To order, specify either brass or stainless steel **threaded fittings**.

Made-to-order, specify location from disc end to bottom of threads.

Made-to-Order Availability

FIREROD Diameter inches	Minimum No-Heat inches	(mm)
¼	¾	(19)
⅜	1	(25)
½	1	(25)
⅝	1	(25)
¾	1 ¼	(32)
1	1 ¼	(32)

Threaded Fittings Specifications

FIREROD Diameter inches	Pipe Thread Size NPTF	Fitting Length inches	(mm)
¼	⅛	½	(13)
⅜	¼	11/16	(17)
½	⅜	¾	(19)
⅝	½	⅞	(22)
¾	¾	1	(23)
1	1	1	(25)

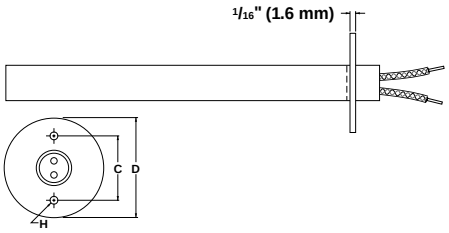

Flanges

Stainless steel flanges are a convenient mounting method as well as a way to position a heater within an application. Standard location is ¼ inch (6 mm) from lead end, however a specific location may be requested any place on the unheated section. Flanges can be staked, soldered or welded.

To order, specify **flange**, size and location.

Flange Specifications

FIREROD Diameter inches	Flange Size	inches D	inches C	inches H
¼, ⅜, ½	FS	1	¾	0.144
¼, ⅜, ½ ⅝, ¾	FM	1 ½	1 ⅛	0.156
⅝, ¾, 1	FL	2	1 ½	0.201

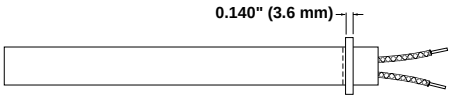

Locating Ring

A stainless steel locating ring can be used as a retaining collar to position a FIREROD if mounting requirements are not critical.

To order, specify **locating ring** and location.

Diameter inches:	⅜	½	⅝	¾
Ring O.D. inches:	5/8	3/4	7/8	1

Cartridge Heaters

F.O.B.: St. Louis, Missouri

FIREROD

Diameter inches	Sheath Length inches	(mm)	Volts	Watts	Watt Density W/in²	(W/cm²)	Approx. Net Wt. lbs	(kg)	Availability	Code No.
⅛	1 ¼	(31.8)	120	25	87	(13)	0.02	(0.009)	Stock	**C1E14**
	1 ¼	(31.8)	120	50	174	(18)	0.02	(0.009)	Stock	**C1E13**
	1 ¼	(31.8)	240	35	113	(27)	0.02	(0.009)	Stock	**C1E42**
	1 ½	(38.1)	120	30	78	(12)	0.02	(0.009)	Stock	**C1J5**
	1 ½	(38.1)	120	60	156	(24)	0.02	(0.009)	Stock	**C1J6**
	2	(50.8)	120	50	87	(13)	0.02	(0.009)	Stock	**C2A4**
	2	(50.8)	120	100	174	(27)	0.02	(0.009)	Stock	**C2A5**
¼	1	(25.4)	120	80	208	(32)	0.02	(0.009)	Stock	**E1A51**
	1	(25.4)	120	100	260	(40)	0.02	(0.009)	Stock	**E1A52**
	1	(25.4)	120	150	390	(60)	0.02	(0.009)	Stock	**E1A53**
	1	(25.4)	240	100	250	(39)	0.02	(0.009)	Stock	**E1A66**
	1 ¼	(31.8)	120	75	130	(20)	0.02	(0.009)	Stock	**E1E41**
	1 ¼	(31.8)	120	100	173	(27)	0.02	(0.009)	Stock	**E1E42**
	1 ¼	(31.8)	120	150	260	(40)	0.02	(0.009)	Stock	**E1E43**
	1 ¼	(31.8)	240	225	390	(60)	0.02	(0.009)	Stock	**E1E61**
	1 ½	(38.1)	120	50	65	(10)	0.02	(0.009)	Stock	**E1J39**
	1 ½	(38.1)	120	100	130	(20)	0.02	(0.009)	Stock	**E1J40**
	1 ½	(38.1)	120	150	195	(30)	0.02	(0.009)	Stock	**E1J41**
	1 ½	(38.1)	240	175	228	(35)	0.02	(0.009)	Stock	**E1J49**
	1 ½	(38.1)	120	200	260	(40)	0.02	(0.009)	Stock	**E1J42**
	1 ½	(38.1)	240	200	260	(40)	0.02	(0.009)	Stock	**E1J52**
	1 ½	(38.1)	240	250	325	(50)	0.02	(0.009)	Stock	**E1J35**
	2	(50.8)	120	80	68	(11)	0.03	(0.014)	Stock	**E2A136**
	2	(50.8)	120	100	87	(13)	0.03	(0.014)	Stock	**E2A55**
	2	(50.8)	240	125	108	(17)	0.03	(0.014)	Stock	**E2A82**
	2	(50.8)	120	150	130	(20)	0.03	(0.014)	Stock	**E2A56**
	2	(50.8)	240	150	130	(20)	0.03	(0.014)	Stock	**E2A77**
	2	(50.8)	120	200	173	(27)	0.03	(0.014)	Stock	**E2A57**
	2	(50.8)	240	200	173	(27)	0.03	(0.014)	Stock	**E2A50**
	2	(50.8)	120	250	217	(33)	0.03	(0.014)	Stock	**E2A72**
	2	(50.8)	240	250	215	(33)	0.03	(0.014)	Stock	**E2A76**
	2	(50.8)	240	300	260	(40)	0.03	(0.014)	Stock	**E2A83**
	2 ½	(63.5)	120	250	159	(25)	0.03	(0.014)	Stock	**E2J80**
	2 ½	(63.5)	240	250	159	(25)	0.03	(0.014)	Stock	**E2J49**
	3	(76.2)	120	100	52	(8)	0.04	(0.018)	Stock	**E3A48**
	3	(76.2)	120	200	104	(16)	0.04	(0.018)	Stock	**E3A49**
	3	(76.2)	240	200	104	(16)	0.04	(0.018)	Stock	**E3A60**
	3	(76.2)	240	250	128	(20)	0.04	(0.018)	Stock	**E3A124**
	3	(76.2)	120	300	156	(24)	0.04	(0.018)	Stock	**E3A50**
	3	(76.2)	240	300	156	(24)	0.04	(0.018)	Stock	**E3A51**
	4	(101.6)	120	100	37	(6)	0.04	(0.018)	Stock	**E4A28**
	4	(101.6)	120	200	74	(11)	0.04	(0.018)	Stock	**E4A29**
	4	(101.6)	240	200	74	(11)	0.04	(0.018)	Stock	**E4A32**
	4	(101.6)	120	300	111	(17)	0.04	(0.018)	Stock	**E4A30**
	4	(101.6)	240	300	111	(17)	0.04	(0.018)	Stock	**E4A6**
	4 ½	(114.3)	120	200	64	(10)	0.05	(0.023)	Stock	**E4J30**
	5	(127)	240	350	101	(16)	0.05	(0.023)	Stock	**E5A45**
	5	(127)	120	400	113	(18)	0.05	(0.023)	Stock	**E5A57**
	5	(127)	240	400	113	(18)	0.05	(0.023)	Stock	**E5A34**
	6	(152.4)	240	400	94	(14)	0.06	(0.027)	Stock	**E6A46**
	8	(203.2)	240	800	136	(21)	0.08	(0.036)	Stock	**E8A76**

CONTINUED

Cartridge Heaters

FIREROD

Diameter inches	Sheath Length inches	(mm)	Volts	Watts	Watt Density W/in²	(W/cm²)	Approx. Net Wt. lbs	(kg)	Availability	Code No.
⅜	1	(25.4)	120	55	95	(15)	0.03	(0.014)	Stock	**G1A71**
	1	(25.4)	120	100	172	(26)	0.03	(0.014)	Stock	**G1A29** ①
	1	(25.4)	120	150	259	(40)	0.03	(0.014)	Stock	**G1A38** ①
	1	(25.4)	240	200	344	(53)	0.03	(0.014)	Stock	**G1A83**
	1 ¼	(31.8)	120	100	115	(18)	0.03	(0.014)	Stock	**G1E91**
	1 ¼	(31.8)	120	125	144	(22)	0.03	(0.014)	Stock	**G1E74**
	1 ¼	(31.8)	120	150	172	(27)	0.03	(0.014)	Stock	**G1E92** ①
	1 ¼	(31.8)	240	150	172	(27)	0.03	(0.014)	Stock	**G1E93**
	1 ¼	(31.8)	120	200	230	(35)	0.03	(0.014)	Stock	**G1E94**
	1 ¼	(31.8)	240	200	230	(36)	0.03	(0.014)	Stock	**G1E95**
	1 ¼	(31.8)	120	400	426	(66)	0.03	(0.014)	Stock	**G1E99**
	1 5/16	(33.3)	120	100	104	(16)	0.03	(0.014)	Stock	**G1F13**
	1 5/16	(33.3)	240	100	104	(16)	0.03	(0.014)	Stock	**G1F15**
	1 5/16	(33.3)	120	150	160	(25)	0.03	(0.014)	Stock	**G1F17**
	1 ⅜	(34.9)	240	160	151	(23)	0.03	(0.014)	Stock	**G1G23**
	1 17/16	(36.5)	120	100	94	(15)	0.03	(0.014)	Stock	**G1H6**
	1 ½	(38.1)	120	50	43	(7)	0.04	(0.018)	Stock	**G1J25**
	1 ½	(38.1)	120	75	65	(10)	0.04	(0.018)	Stock	**G1J70**
	1 ½	(38.1)	120	80	68	(11)	0.04	(0.018)	Stock	**G1J66**
	1 ½	(38.1)	120	100	86	(13)	0.04	(0.018)	Stock	**G1J59**
	1 ½	(38.1)	240	100	86	(13)	0.04	(0.018)	Stock	**G1J110**
	1 ½	(38.1)	240	125	106	(16)	0.04	(0.018)	Stock	**G1J182**
	1 ½	(38.1)	120	150	129	(20)	0.04	(0.018)	Stock	**G1J31**
	1 ½	(38.1)	240	150	129	(20)	0.04	(0.018)	Stock	**G1J39** ①
	1 ½	(38.1)	120	200	173	(27)	0.04	(0.018)	Stock	**G1J85**
	1 ½	(38.1)	240	200	173	(27)	0.04	(0.018)	Stock	**G1J73**
	1 ½	(38.1)	120	250	216	(33)	0.04	(0.018)	Stock	**G1J86**
	1 ½	(38.1)	240	250	216	(33)	0.04	(0.018)	Stock	**G1J54**
	1 ¾	(44.5)	120	125	86	(13)	0.05	(0.023)	Stock	**G1N45**
	1 ¾	(44.5)	120	175	122	(19)	0.05	(0.023)	Stock	**G1N46**
	1 ¾	(44.5)	120	250	172	(27)	0.05	(0.023)	Stock	**G1N43**
	1 ¾	(44.5)	240	250	172	(27)	0.05	(0.023)	Stock	**G1N32**
	1 13/16	(46)	240	150	98	(15)	0.05	(0.023)	Stock	**G1P14**
	1 13/16	(46)	120	200	129	(20)	0.05	(0.023)	Stock	**G1P15**
	1 13/16	(46)	240	250	161	(25)	0.05	(0.023)	Stock	**G1P11**
	1 ⅞	(47.6)	120	250	152	(24)	0.05	(0.023)	Stock	**G1R14**
	2	(50.8)	120	50	29	(5)	0.06	(0.027)	Stock	**G2A53**
	2	(50.8)	120	75	42	(7)	0.06	(0.027)	Stock	**G2A192**
	2	(50.8)	120	100	57	(9)	0.06	(0.027)	Stock	**G2A84**
	2	(50.8)	240	100	57	(9)	0.06	(0.027)	Stock	**G2A76**
	2	(50.8)	120	150	86	(13)	0.06	(0.027)	Stock	**G2A56** ①
	2	(50.8)	240	150	86	(13)	0.06	(0.027)	Stock	**G2A81** ①
	2	(50.8)	120	200	115	(18)	0.06	(0.027)	Stock	**G2A127** ①
	2	(50.8)	240	200	115	(18)	0.06	(0.027)	Stock	**G2A37** ①
	2	(50.8)	120	250	144	(22)	0.06	(0.027)	Stock	**G2A47**
	2	(50.8)	240	250	144	(22)	0.06	(0.027)	Stock	**G2A73**
	2	(50.8)	120	300	172	(27)	0.06	(0.027)	Stock	**G2A139**
	2	(50.8)	240	300	172	(27)	0.06	(0.027)	Stock	**G2A98** ①
	2	(50.8)	120	400	230	(36)	0.06	(0.027)	Stock	**G2A153**
	2	(50.8)	240	400	230	(36)	0.06	(0.027)	Stock	**G2A146**
	2	(50.8)	120	500	282	(44)	0.06	(0.027)	Stock	**G2A95**

CONTINUED

① MI leads available from stock. Add "Z" after Code No. to order. ex: GIJ39Z

Cartridge Heaters

FIREROD

Diameter inches	Sheath Length inches	(mm)	Volts	Watts	Watt Density W/in²	(W/cm²)	Approx. Net Wt. lbs	(kg)	Availability	Code No.
⅜	2	(50.8)	240	500	282	(44)	0.06	(0.027)	Stock	**G2A97**
	2 ⅛	(54)	240	200	106	(16)	0.06	(0.027)	Stock	**G2C13**
	2 ¼	(57.2)	120	75	37	(6)	0.07	(0.032)	Stock	**G2E88**
	2 ¼	(57.2)	120	125	62	(10)	0.07	(0.032)	Stock	**G2E89**
	2 ¼	(57.2)	240	125	62	(10)	0.07	(0.032)	Stock	**G2E138**
	2 ¼	(57.2)	240	150	73	(11)	0.07	(0.032)	Stock	**G2E68**
	2 ¼	(57.2)	120	175	86	(13)	0.07	(0.032)	Stock	**G2E90**
	2 ¼	(57.2)	120	250	123	(19)	0.07	(0.032)	Stock	**G2E2**
	2 ¼	(57.2)	240	250	123	(19)	0.07	(0.032)	Stock	**G2E78**
	2 ¼	(57.2)	120	300	148	(23)	0.07	(0.032)	Stock	**G2E108**
	2 ¼	(57.2)	240	300	148	(23)	0.07	(0.032)	Stock	**G2E12**
	2 ¼	(57.2)	120	350	173	(27)	0.07	(0.032)	Stock	**G2E91**
	2 ¼	(57.2)	240	350	173	(27)	0.07	(0.032)	Stock	**G2E75**
	2 ½	(63.5)	120	200	87	(13)	0.07	(0.032)	Stock	**G2J110**
	2 ½	(63.5)	240	200	87	(13)	0.07	(0.032)	Stock	**G2J81**
	2 ½	(63.5)	120	250	108	(17)	0.07	(0.032)	Stock	**G2J46**
	2 ½	(63.5)	240	250	108	(17)	0.07	(0.032)	Stock	**G2J80**
	2 ½	(63.5)	120	300	130	(20)	0.07	(0.032)	Stock	**G2J118**
	2 ½	(63.5)	240	300	130	(20)	0.07	(0.032)	Stock	**G2J119**
	2 ½	(63.5)	120	400	174	(27)	0.07	(0.032)	Stock	**G2J26**
	2 ½	(63.5)	240	400	174	(27)	0.07	(0.032)	Stock	**G2J146**
	2 ½	(63.5)	120	500	216	(33)	0.07	(0.032)	Stock	**G2J109**
	2 ½	(63.5)	240	500	216	(33)	0.07	(0.032)	Stock	**G2J52**
	2 13/16	(71.4)	120	60	22	(3)	0.08	(0.036)	Stock	**G2P9**
	2 13/16	(71.4)	120	250	92	(14)	0.08	(0.036)	Stock	**G2P3**
	2 13/16	(71.4)	240	300	110	(17)	0.08	(0.036)	Stock	**G2P5**
	3	(76.2)	120	100	34	(5)	0.08	(0.036)	Stock	**G3A55**
	3	(76.2)	240	100	34	(5)	0.08	(0.036)	Stock	**G3A137**
	3	(76.2)	120	150	52	(8)	0.08	(0.036)	Stock	**G3A121**
	3	(76.2)	120	200	69	(11)	0.08	(0.036)	Stock	**G3A61**
	3	(76.2)	240	200	69	(11)	0.08	(0.036)	Stock	**G3A39** ①
	3	(76.2)	120	250	86	(13)	0.08	(0.036)	Stock	**G3A52**
	3	(76.2)	240	250	86	(13)	0.08	(0.036)	Stock	**G3A54**
	3	(76.2)	120	300	104	(16)	0.08	(0.036)	Stock	**G3A73** ①
	3	(76.2)	240	300	104	(16)	0.08	(0.036)	Stock	**G3A92**
	3	(76.2)	120	400	138	(21)	0.08	(0.036)	Stock	**G3A44**
	3	(76.2)	240	400	138	(21)	0.08	(0.036)	Stock	**G3A65**
	3	(76.2)	120	500	173	(27)	0.08	(0.036)	Stock	**G3A119** ①
	3	(76.2)	240	500	173	(27)	0.08	(0.036)	Stock	**G3A120**
	3	(76.2)	240	600	208	(32)	0.08	(0.036)	Stock	**G3A133**
	3 5/16	(84.2)	120	500	152	(24)	0.08	(0.036)	Stock	**G3F24**
	3 ½	(88.9)	120	250	72	(11)	0.09	(0.041)	Stock	**G3J77**
	3 ½	(88.9)	240	250	72	(11)	0.09	(0.041)	Stock	**G3J65**
	3 ½	(88.9)	120	300	87	(13)	0.09	(0.041)	Stock	**G3J87**
	3 ½	(88.9)	240	300	87	(13)	0.09	(0.041)	Stock	**G3J68**
	3 ½	(88.9)	120	500	144	(22)	0.09	(0.041)	Stock	**G3J22**
	3 ½	(88.9)	240	500	144	(22)	0.09	(0.041)	Stock	**G3J63**
	3 13/16	(96.8)	120	150	38	(6)	0.09	(0.041)	Stock	**G3P8**
	3 13/16	(96.8)	240	500	128	(20)	0.09	(0.041)	Stock	**G3P3**
	4	(101.6)	120	125	31	(5)	0.09	(0.041)	Stock	**G4A54**
	4	(101.6)	240	125	31	(5)	0.09	(0.041)	Stock	**G4A163**

CONTINUED

① MI leads available from stock. Add "Z" after Code No. to order.

Cartridge Heaters

FIREROD

Diameter inches	Sheath Length inches	(mm)	Volts	Watts	Watt Density W/in²	(W/cm²)	Approx. Net Wt. lbs	(kg)	Availability	Code No.
⅜	4	(101.6)	120	150	37	(6)	0.09	(0.041)	Stock	**G4A78**
	4	(101.6)	120	175	43	(7)	0.09	(0.041)	Stock	**G4A191**
	4	(101.6)	120	250	62	(10)	0.09	(0.041)	Stock	**G4A40**
	4	(101.6)	240	250	62	(10)	0.09	(0.041)	Stock	**G4A87**
	4	(101.6)	120	300	74	(11)	0.09	(0.041)	Stock	**G4A94**
	4	(101.6)	240	300	74	(11)	0.09	(0.041)	Stock	**G4A95**
	4	(101.6)	120	400	99	(15)	0.09	(0.041)	Stock	**G4A48**
	4	(101.6)	240	400	99	(15)	0.09	(0.041)	Stock	**G4A44**
	4	(101.6)	240	450	109	(17)	0.09	(0.041)	Stock	**G4A64**
	4	(101.6)	120	500	123	(19)	0.09	(0.041)	Stock	**G4A96**
	4	(101.6)	240	500	123	(19)	0.09	(0.041)	Stock	**G4A92** ①
	4	(101.6)	120	550	134	(21)	0.09	(0.041)	Stock	**G4A200**
	4 ¼	(108)	240	300	67	(10)	0.09	(0.041)	Stock	**G4E25**
	4 ¼	(108)	240	750	167	(26)	0.09	(0.041)	Stock	**G4E15**
	4 ½	(114.3)	120	300	65	(10)	0.10	(0.045)	Stock	**G4J54**
	4 ½	(114.3)	240	300	65	(10)	0.10	(0.045)	Stock	**G4J33**
	4 ½	(114.3)	120	500	108	(17)	0.10	(0.045)	Stock	**G4J55**
	4 ½	(114.3)	240	500	108	(17)	0.10	(0.045)	Stock	**G4J37**
	4 13/16	(122.2)	240	300	59	(9)	0.11	(0.050)	Stock	**G4P11**
	4 13/16	(122.2)	240	500	98	(15)	0.11	(0.050)	Stock	**G4P3**
	5	(127)	120	150	29	(4)	0.11	(0.050)	Stock	**G5A68**
	5	(127)	240	150	29	(4)	0.11	(0.050)	Stock	**G5A56**
	5	(127)	120	300	58	(9)	0.11	(0.050)	Stock	**G5A69**
	5	(127)	240	300	58	(9)	0.11	(0.050)	Stock	**G5A70** ①
	5	(127)	120	500	96	(15)	0.11	(0.050)	Stock	**G5A38**
	5	(127)	240	500	96	(15)	0.11	(0.050)	Stock	**G5A71** ①
	5	(127)	240	750	144	(22)	0.11	(0.050)	Stock	**G5A67**
	5	(127)	240	1000	192	(30)	0.11	(0.050)	Stock	**G5A115**
	5 ¼	(133.4)	240	200	45	(7)	0.12	(0.054)	Stock	**G5E16**
	5 ½	(139.7)	240	600	104	(16)	0.12	(0.054)	Stock	**G5J36**
	5 ½	(139.7)	240	1000	173	(27)	0.12	(0.054)	Stock	**G5J45**
	6	(152.4)	120	200	31	(5)	0.13	(0.059)	Stock	**G6A80**
	6	(152.4)	120	250	39	(6)	0.13	(0.059)	Stock	**G6A40** ①
	6	(152.4)	240	250	39	(6)	0.13	(0.059)	Stock	**G6A92**
	6	(152.4)	120	400	63	(10)	0.13	(0.059)	Stock	**G6A81**
	6	(152.4)	240	400	63	(10)	0.13	(0.059)	Stock	**G6A82**
	6	(152.4)	120	500	79	(12)	0.13	(0.059)	Stock	**G6A125**
	6	(152.4)	240	500	79	(12)	0.13	(0.059)	Stock	**G6A59**
	6	(152.4)	120	600	94	(15)	0.13	(0.059)	Stock	**G6A56**
	6	(152.4)	240	600	94	(15)	0.13	(0.059)	Stock	**G6A51**
	6	(152.4)	240	750	117	(18)	0.13	(0.059)	Stock	**G6A46**
	6	(152.4)	240	1000	157	(24)	0.13	(0.059)	Stock	**G6A83**
	6 ½	(165.1)	240	600	86	(13)	0.14	(0.064)	Stock	**G6J23**
	6 ½	(165.1)	240	1000	144	(22)	0.14	(0.064)	Stock	**G6J33**
	7	(177.8)	120	250	33	(5)	0.14	(0.064)	Stock	**G7A40**
	7	(177.8)	240	250	33	(5)	0.14	(0.064)	Stock	**G7A32**
	7	(177.8)	240	500	65	(10)	0.14	(0.064)	Stock	**G7A30**
	7	(177.8)	120	600	80	(12)	0.14	(0.064)	Stock	**G7A41**
	7	(177.8)	240	600	80	(12)	0.14	(0.064)	Stock	**G7A42** ①
	7	(177.8)	240	1000	133	(21)	0.14	(0.064)	Stock	**G7A43** ①
	7 ½	(190.5)	240	600	74	(11)	0.15	(0.068)	Stock	**G7J27** ①

CONTINUED

① MI leads available from stock. Add "Z" after Code No. to order.

Cartridge Heaters

FIREROD

Diameter inches	Sheath Length inches	(mm)	Volts	Watts	Watt Density W/in²	(W/cm²)	Approx. Net Wt. lbs	(kg)	Availability	Code No.
⅜	7 ½	(190.5)	240	1000	124	(19)	0.15	(0.068)	Stock	**G7J28**
	7 13/16	(198.5)	240	750	87	(13)	0.15	(0.068)	Stock	**G7P5**
	8	(203.2)	120	300	34	(5)	0.16	(0.073)	Stock	**G8A54**
	8	(203.2)	240	300	34	(5)	0.16	(0.073)	Stock	**G8A47**
	8	(203.2)	120	400	45	(7)	0.16	(0.073)	Stock	**G8A109**
	8	(203.2)	120	500	58	(9)	0.16	(0.073)	Stock	**G8A81**
	8	(203.2)	240	500	58	(9)	0.16	(0.073)	Stock	**G8A32**
	8	(203.2)	120	600	69	(11)	0.16	(0.073)	Stock	**G8A53**
	8	(203.2)	240	600	69	(11)	0.16	(0.073)	Stock	**G8A37**
	8	(203.2)	240	700	79	(12)	0.16	(0.073)	Stock	**G8A98**
	8	(203.2)	240	1000	115	(18)	0.16	(0.073)	Stock	**G8A45** ①
	8 ⅝	(219)	240	500	52	(8)	0.17	(0.077)	Stock	**G8L3**
	9	(228.6)	240	1000	100	(16)	0.18	(0.082)	Stock	**G9A37**
	9 ½	(241.3)	240	600	57	(9)	0.19	(0.086)	Stock	**G9J20**
	9 ½	(241.3)	240	1000	96	(15)	0.19	(0.086)	Stock	**G9J12**
	10	(254)	120	400	36	(6)	0.19	(0.086)	Stock	**G10A48**
	10	(254)	120	600	54	(8)	0.19	(0.086)	Stock	**G10A35**
	10	(254)	240	600	54	(8)	0.19	(0.086)	Stock	**G10A31** ①
	10	(254)	240	1000	91	(14)	0.19	(0.086)	Stock	**G10A32**
	10 13/16	(274.7)	240	375	31	(5)	0.20	(0.091)	Stock	**G10P5**
	12	(304.8)	120	400	30	(5)	0.22	(0.100)	Stock	**G12A45**
	12	(304.8)	120	600	45	(7)	0.22	(0.100)	Stock	**G12A29**
	12	(304.8)	240	600	45	(7)	0.22	(0.100)	Stock	**G12A46**
	12	(304.8)	240	1000	75	(12)	0.22	(0.100)	Stock	**G12A47** ①
	12 13/16	(325.5)	240	1000	69	(11)	0.23	(0.104)	Stock	**G12P3**
½	1	(25.4)	120	50	65	(10)	0.06	(0.027)	Stock	**J1A30**
	1	(25.4)	120	150	193	(30)	0.06	(0.027)	Stock	**J1A31**
	1 ¼	(31.8)	120	50	43	(7)	0.07	(0.032)	Stock	**J1E50**
	1 ¼	(31.8)	120	125	107	(17)	0.07	(0.032)	Stock	**J1E51**
	1 ¼	(31.8)	240	125	107	(17)	0.07	(0.032)	Stock	**J1E58**
	1 ¼	(31.8)	240	200	172	(27)	0.07	(0.032)	Stock	**J1E52**
	1 ¼	(31.8)	240	250	212	(33)	0.07	(0.032)	Stock	**J1E88**
	1 ½	(38.1)	120	50	32	(3)	0.08	(0.036)	Stock	**J1J47**
	1 ½	(38.1)	120	150	97	(15)	0.08	(0.036)	Stock	**J1J48**
	1 ½	(38.1)	240	150	97	(15)	0.08	(0.036)	Stock	**J1J96**
	1 ½	(38.1)	120	200	128	(20)	0.08	(0.036)	Stock	**J1J59**
	1 ½	(38.1)	240	200	128	(20)	0.08	(0.036)	Stock	**J1J38**
	2	(50.8)	120	75	32	(5)	0.09	(0.041)	Stock	**J2A80**
	2	(50.8)	120	200	86	(13)	0.09	(0.041)	Stock	**J2A49**
	2	(50.8)	240	200	86	(13)	0.09	(0.041)	Stock	**J2A75**
	2	(50.8)	120	250	108	(17)	0.09	(0.041)	Stock	**J2A85**
	2	(50.8)	240	250	108	(17)	0.09	(0.041)	Stock	**J2A71** ①
	2	(50.8)	120	300	128	(20)	0.09	(0.041)	Stock	**J2A95**
	2	(50.8)	240	300	128	(20)	0.09	(0.041)	Stock	**J2A96**
	2	(50.8)	120	400	171	(27)	0.09	(0.041)	Stock	**J2A81**
	2	(50.8)	240	400	171	(27)	0.09	(0.041)	Stock	**J2A82**
	2 ¼	(57.2)	120	75	28	(4)	0.10	(0.045)	Stock	**J2E86**
	2 ¼	(57.2)	120	125	46	(7)	0.10	(0.045)	Stock	**J2E87**
	2 ¼	(57.2)	120	250	92	(14)	0.10	(0.045)	Stock	**J2E56**
	2 ¼	(57.2)	240	250	92	(14)	0.10	(0.045)	Stock	**J2E69**
	2 ¼	(57.2)	120	400	147	(22)	0.10	(0.045)	Stock	**J2E114**

CONTINUED

① MI leads available from stock. Add "Z" after Code No. to order.

Cartridge Heaters

FIREROD

Diameter inches	Sheath Length inches	(mm)	Volts	Watts	Watt Density W/in²	(W/cm²)	Approx. Net Wt. lbs	(kg)	Availability	Code No.
½	2 ¼	(57.2)	240	400	147	(22)	0.10	(0.045)	Stock	**J2E115**
	2 ¼	(57.2)	120	500	184	(29)	0.10	(0.045)	Stock	**J2E64**
	2 ¼	(57.2)	240	500	184	(29)	0.10	(0.045)	Stock	**J2E88**
	2 ⅜	(60.3)	120	100	34	(5)	0.10	(0.045)	Stock	**J2G35**
	2 ⅜	(60.3)	240	100	34	(5)	0.10	(0.045)	Stock	**J2G28**
	2 ⅜	(60.3)	120	250	86	(13)	0.10	(0.045)	Stock	**J2G34**
	2 ⅜	(60.3)	240	250	86	(13)	0.10	(0.045)	Stock	**J2G37**
	2 ⅜	(60.3)	120	500	172	(27)	0.10	(0.045)	Stock	**J2G36**
	2 ⅜	(60.3)	240	500	172	(27)	0.10	(0.045)	Stock	**J2G38**
	2 ½	(63.5)	120	100	32	(5)	0.11	(0.050)	Stock	**J2J67**
	2 ½	(63.5)	240	100	32	(5)	0.11	(0.050)	Stock	**J2J57**
	2 ½	(63.5)	120	250	81	(13)	0.11	(0.050)	Stock	**J2J68**
	2 ½	(63.5)	240	250	81	(13)	0.11	(0.050)	Stock	**J2J69**
	2 ½	(63.5)	120	300	96	(15)	0.11	(0.050)	Stock	**J2J109**
	2 ½	(63.5)	240	300	96	(15)	0.11	(0.050)	Stock	**J2J110**
	2 ½	(63.5)	120	400	128	(20)	0.11	(0.050)	Stock	**J2J81**
	2 ½	(63.5)	240	400	128	(20)	0.11	(0.050)	Stock	**J2J82**
	2 ½	(63.5)	120	500	161	(24)	0.11	(0.050)	Stock	**J2J66**
	2 ½	(63.5)	240	500	161	(24)	0.11	(0.050)	Stock	**J2J70**
	2 9/16	(65.1)	120	350	108	(17)	0.11	(0.050)	Stock	**J2K6**
	2 9/16	(65.1)	240	300	93	(14)	0.11	(0.050)	Stock	**J2K3**
	2 ¾	(69.9)	240	400	115	(18)	0.11	(0.050)	Stock	**J2N43**
	2 ¾	(69.9)	120	400	115	(18)	0.11	(0.050)	Stock	**J2N45**
	3	(76.2)	120	125	32	(5)	0.12	(0.054)	Stock	**J3A108**
	3	(76.2)	240	125	32	(5)	0.12	(0.054)	Stock	**J3A109**
	3	(76.2)	120	250	64	(10)	0.12	(0.054)	Stock	**J3A107**
	3	(76.2)	240	250	64	(10)	0.12	(0.054)	Stock	**J3A89**
	3	(76.2)	120	300	78	(12)	0.12	(0.054)	Stock	**J3A65**
	3	(76.2)	120	350	89	(14)	0.12	(0.054)	Stock	**J3A173**
	3	(76.2)	240	300	78	(12)	0.12	(0.054)	Stock	**J3A73**
	3	(76.2)	120	400	104	(16)	0.12	(0.054)	Stock	**J3A132**
	3	(76.2)	240	400	104	(16)	0.12	(0.054)	Stock	**J3A29**
	3	(76.2)	120	500	129	(20)	0.12	(0.054)	Stock	**J3A110**
	3	(76.2)	240	500	129	(20)	0.12	(0.054)	Stock	**J3A111**
	3	(76.2)	120	600	154	(24)	0.12	(0.054)	Stock	**J3A51**
	3	(76.2)	240	600	154	(24)	0.12	(0.054)	Stock	**J3A127**
	3	(76.2)	120	750	193	(30)	0.12	(0.054)	Stock	**J3A137**
	3	(76.2)	240	750	193	(30)	0.12	(0.054)	Stock	**J3A112**
	3	(76.2)	120	1000	254	(39)	0.12	(0.054)	Stock	**J3A79**
	3 ½	(88.9)	120	250	54	(8)	0.14	(0.064)	Stock	**J3J44**
	3 ½	(88.9)	240	250	54	(8)	0.14	(0.064)	Stock	**J3J64**
	3 ½	(88.9)	240	350	75	(12)	0.14	(0.064)	Stock	**J3J65**
	3 ½	(88.9)	120	500	107	(17)	0.14	(0.064)	Stock	**J3J45**
	3 ½	(88.9)	240	500	107	(17)	0.14	(0.064)	Stock	**J3J46**
	3 ½	(88.9)	240	750	162	(25)	0.14	(0.064)	Stock	**J3J63**
	3 13/16	(96.8)	120	500	96	(15)	0.15	(0.068)	Stock	**J3P9**
	3 13/16	(96.8)	240	250	48	(7)	0.15	(0.068)	Stock	**J3P2**
	4	(101.6)	120	150	28	(4)	0.15	(0.068)	Stock	**J4A117**
	4	(101.6)	240	150	28	(4)	0.15	(0.068)	Stock	**J4A122**
	4	(101.6)	120	250	46	(7)	0.15	(0.068)	Stock	**J4A118**
	4	(101.6)	240	250	46	(7)	0.15	(0.068)	Stock	**J4A90** ①

CONTINUED

Cartridge Heaters

FIREROD

Diameter inches	Sheath Length inches	(mm)	Volts	Watts	Watt Density W/in²	(W/cm²)	Approx. Net Wt. lbs	(kg)	Availability	Code No.
½	4	(101.6)	120	300	56	(9)	0.15	(0.068)	Stock	**J4A63**
	4	(101.6)	240	300	56	(9)	0.15	(0.068)	Stock	**J4A26**
	4	(101.6)	120	350	65	(10)	0.15	(0.068)	Stock	**J4A1**
	4	(101.6)	240	350	65	(10)	0.15	(0.068)	Stock	**J4A103**
	4	(101.6)	120	400	74	(11)	0.15	(0.068)	Stock	**J4A139**
	4	(101.6)	240	400	74	(11)	0.15	(0.068)	Stock	**J4A68**
	4	(101.6)	120	500	92	(14)	0.15	(0.068)	Stock	**J4A16**
	4	(101.6)	120	550	100	(16)	0.15	(0.068)	Stock	**J4A242**
	4	(101.6)	240	500	92	(14)	0.15	(0.068)	Stock	**J4A92**
	4	(101.6)	120	750	138	(21)	0.15	(0.068)	Stock	**J4A198**
	4	(101.6)	240	750	138	(21)	0.15	(0.068)	Stock	**J4A119**
	4	(101.6)	240	1000	184	(28)	0.15	(0.068)	Stock	**J4A73**
	4 ½	(114.3)	120	500	80	(12)	0.17	(0.077)	Stock	**J4J69**
	4 ½	(114.3)	240	500	80	(12)	0.17	(0.077)	Stock	**J4J57**
	4 ½	(114.3)	120	750	120	(19)	0.17	(0.077)	Stock	**J4J70**
	4 ½	(114.3)	240	750	120	(19)	0.17	(0.077)	Stock	**J4J32**
	4 13/16	(122.2)	240	300	44	(7)	0.19	(0.086)	Stock	**J4P3**
	4 13/16	(122.2)	240	1000	148	(23)	0.19	(0.086)	Stock	**J4P6**
	5	(127)	120	200	29	(4)	0.19	(0.086)	Stock	**J5A85**
	5	(127)	240	200	29	(4)	0.19	(0.086)	Stock	**J5A74**
	5	(127)	120	350	50	(8)	0.19	(0.086)	Stock	**J5A86**
	5	(127)	240	350	50	(8)	0.19	(0.086)	Stock	**J5A63**
	5	(127)	120	400	58	(9)	0.19	(0.086)	Stock	**J5A98**
	5	(127)	240	400	58	(9)	0.19	(0.086)	Stock	**J5A46**
	5	(127)	120	500	72	(11)	0.19	(0.086)	Stock	**J5A52**
	5	(127)	240	500	72	(11)	0.19	(0.086)	Stock	**J5A45** ①
	5	(127)	120	750	108	(17)	0.19	(0.086)	Stock	**J5A121**
	5	(127)	240	750	108	(17)	0.19	(0.086)	Stock	**J5A72**
	5	(127)	240	1000	143	(22)	0.19	(0.086)	Stock	**J5A87**
	5 ½	(139.7)	240	200	25	(4)	0.20	(0.091)	Stock	**J5J3**
	5 ½	(139.7)	120	500	64	(10)	0.20	(0.091)	Stock	**J5J43**
	5 ½	(139.7)	240	500	64	(10)	0.20	(0.091)	Stock	**J5J33**
	5 ½	(139.7)	240	650	83	(13)	0.20	(0.091)	Stock	**J5J69**
	5 ½	(139.7)	120	750	97	(15)	0.20	(0.091)	Stock	**J5J44**
	5 ½	(139.7)	240	750	97	(15)	0.20	(0.091)	Stock	**J5J45**
	5 ¾	(146)	120	700	86	(13)	0.20	(0.091)	Stock	**J5N6**
	5 ¾	(146)	240	700	86	(13)	0.20	(0.091)	Stock	**J5N8**
	5 13/16	(147.6)	240	300	36	(6)	0.21	(0.095)	Stock	**J5P10**
	6	(152.4)	120	250	29	(4)	0.21	(0.095)	Stock	**J6A114**
	6	(152.4)	240	250	29	(4)	0.21	(0.095)	Stock	**J6A171**
	6	(152.4)	240	300	35	(6)	0.21	(0.095)	Stock	**J6A66**
	6	(152.4)	240	350	41	(7)	0.21	(0.095)	Stock	**J6A119**
	6	(152.4)	120	500	59	(9)	0.21	(0.095)	Stock	**J6A115**
	6	(152.4)	240	500	59	(9)	0.21	(0.095)	Stock	**J6A94** ①
	6	(152.4)	480	500	59	(9)	0.21	(0.095)	Stock	**J6A301**②
	6	(152.4)	120	750	88	(14)	0.21	(0.095)	Stock	**J6A99**
	6	(152.4)	240	750	88	(14)	0.21	(0.095)	Stock	**J6A90**
	6	(152.4)	120	1000	117	(18)	0.21	(0.095)	Stock	**J6A53**
	6	(152.4)	240	1000	117	(18)	0.21	(0.095)	Stock	**J6A36** ①
	6 ½	(165.1)	240	500	54	(8)	0.23	(0.104)	Stock	**J6J45**
	6 ½	(165.1)	240	1000	108	(17)	0.23	(0.104)	Stock	**J6J27** ①

CONTINUED

① MI leads available from stock. Add "Z" after Code No. to order.
② Units with 480 volts cannot be supplied with LA lead terminations.

Cartridge Heaters

FIREROD

Diameter inches	Sheath Length inches	(mm)	Volts	Watts	Watt Density W/in²	(W/cm²)	Approx. Net Wt. lbs	(kg)	Availability	Code No.
½	7	(177.8)	120	250	25	(4)	0.24	(0.109)	Stock	**J7A79**
	7	(177.8)	120	500	50	(8)	0.24	(0.109)	Stock	**J7A80**
	7	(177.8)	240	500	50	(8)	0.24	(0.109)	Stock	**J7A57**
	7	(177.8)	120	600	60	(9)	0.24	(0.109)	Stock	**J7A50**
	7	(177.8)	240	600	60	(9)	0.24	(0.109)	Stock	**J7A95**
	7	(177.8)	240	1000	99	(15)	0.24	(0.109)	Stock	**J7A81**
	7 ½	(190.5)	240	500	46	(7)	0.26	(0.118)	Stock	**J7J25**
	7 ½	(190.5)	240	1000	92	(14)	0.26	(0.118)	Stock	**J7J26**
	8	(203.2)	120	300	26	(4)	0.28	(0.127)	Stock	**J8A71**
	8	(203.2)	240	300	26	(4)	0.28	(0.127)	Stock	**J8A111**
	8	(203.2)	120	500	43	(7)	0.28	(0.127)	Stock	**J8A64**
	8	(203.2)	240	500	43	(7)	0.28	(0.127)	Stock	**J8A66**
	8	(203.2)	120	1000	86	(13)	0.28	(0.127)	Stock	**J8A84**
	8	(203.2)	240	1000	86	(13)	0.28	(0.127)	Stock	**J8A60**
	8	(203.2)	480	1000	86	(13)	0.28	(0.127)	Stock	**J8A35** ②
	8	(203.2)	240	1500	129	(20)	0.28	(0.127)	Stock	**J8A100**
	8	(203.2)	240	2000	172	(27)	0.28	(0.127)	Stock	**J8A101** ①
	8 ½	(215.9)	240	300	24	(4)	0.29	(0.132)	Stock	**J8J39**
	8 ½	(215.9)	240	500	40	(6)	0.29	(0.132)	Stock	**J8J30**
	8 ½	(215.9)	240	1000	80	(12)	0.29	(0.132)	Stock	**J8J28**
	9	(228.6)	240	500	38	(6)	0.30	(0.136)	Stock	**J9A35**
	9	(228.6)	240	1000	76	(12)	0.30	(0.136)	Stock	**J9A58**
	9 ½	(241.3)	240	500	36	(6)	0.32	(0.145)	Stock	**J9J14**
	9 ½	(241.3)	240	1000	72	(11)	0.32	(0.145)	Stock	**J9J12** ①
	10	(254)	120	500	34	(5)	0.33	(0.150)	Stock	**J10A61**
	10	(254)	240	500	34	(5)	0.33	(0.150)	Stock	**J10A62**
	10	(254)	120	1000	68	(11)	0.33	(0.150)	Stock	**J10A63**
	10	(254)	240	1000	68	(11)	0.33	(0.150)	Stock	**J10A42**
	10	(254)	240	1500	102	(16)	0.33	(0.150)	Stock	**J10A33**
	10	(254)	240	2000	136	(21)	0.33	(0.150)	Stock	**J10A64** ①
	11	(279.4)	240	1000	61	(9)	0.36	(0.163)	Stock	**J11A60**
	12	(304.8)	120	500	28	(4)	0.40	(0.181)	Stock	**J12A63**
	12	(304.8)	240	500	28	(4)	0.40	(0.181)	Stock	**J12A76**
	12	(304.8)	120	1000	56	(9)	0.40	(0.181)	Stock	**J12A40**
	12	(304.8)	240	1000	56	(9)	0.40	(0.181)	Stock	**J12A49**
	12	(304.8)	480	1200	66	(10)	0.40	(0.181)	Stock	**J12A215** ②
	12	(304.8)	240	1500	84	(13)	0.40	(0.181)	Stock	**J12A37**
	12	(304.8)	240	2000	112	(17)	0.40	(0.181)	Stock	**J12A89**
	14	(355.6)	240	1000	48	(7)	0.48	(0.218)	Stock	**J14A41**
	14	(355.6)	240	2300	110	(17)	0.48	(0.218)	Stock	**J14A39**
	15	(381)	240	1500	66	(10)	0.50	(0.227)	Stock	**J15A19**
	16	(406.4)	240	1000	41	(7)	0.52	(0.236)	Stock	**J16A12**
	18	(457.2)	240	1500	55	(9)	0.57	(0.259)	Stock	**J18A19**
	18	(457.2)	240	1700	62	(9)	0.57	(0.259)	Stock	**J18A23**
⅝	1 ¼	(31.8)	120	50	34	(5)	0.10	(0.045)	Stock	**L1E26**
	1 ¼	(31.8)	120	200	137	(21)	0.10	(0.045)	Stock	**L1E24**
	1 ¼	(31.8)	120	250	171	(27)	0.10	(0.045)	Stock	**L1E27**
	1 ½	(38.1)	120	250	128	(20)	0.11	(0.050)	Stock	**L1J23**
	1 ½	(38.1)	240	250	128	(20)	0.11	(0.050)	Stock	**L1J24**
	2	(50.8)	120	100	34	(5)	0.13	(0.059)	Stock	**L2A48**

CONTINUED

① MI leads available from stock. Add "Z" after Code No. to order.
② Units with 480 volts cannot be supplied with LA lead terminations.

Cartridge Heaters

FIREROD

Diameter inches	Sheath Length inches	(mm)	Volts	Watts	Watt Density W/in²	(W/cm²)	Approx. Net Wt. lbs	(kg)	Availability	Code No.
⅝	2	(50.8)	120	200	68	(11)	0.13	(0.059)	Stock	**L2A49**
	2	(50.8)	240	500	170	(26)	0.13	(0.059)	Stock	**L2A54**
	2 ¼	(57.2)	120	100	29	(4)	0.14	(0.064)	Stock	**L2E49**
	2 ¼	(57.2)	120	250	73	(11)	0.14	(0.064)	Stock	**L2E50**
	2 ¼	(57.2)	240	250	73	(11)	0.14	(0.064)	Stock	**L2E12**
	2 ¼	(57.2)	120	350	103	(16)	0.14	(0.064)	Stock	**L2E40**
	2 ¼	(57.2)	240	350	103	(16)	0.14	(0.064)	Stock	**L2E51**
	2 ⅜	(60.3)	120	280	77	(12)	0.16	(0.073)	Stock	**L2G18**
	2 ⅜	(60.3)	240	280	77	(12)	0.16	(0.073)	Stock	**L2G19**
	3	(76.2)	120	150	31	(5)	0.20	(0.091)	Stock	**L3A81**
	3	(76.2)	120	250	51	(8)	0.20	(0.091)	Stock	**L3A82**
	3	(76.2)	240	250	51	(8)	0.20	(0.091)	Stock	**L3A9**
	3	(76.2)	120	400	81	(13)	0.20	(0.091)	Stock	**L3A94**
	3	(76.2)	120	500	102	(16)	0.20	(0.091)	Stock	**L3A113**
	3	(76.2)	240	500	103	(16)	0.20	(0.091)	Stock	**L3A33**
	3	(76.2)	240	750	154	(24)	0.20	(0.091)	Stock	**L3A71**
	3 ¾	(95.3)	120	525	82	(13)	0.24	(0.109)	Stock	**L3N12**
	3 ¾	(95.3)	240	525	82	(13)	0.24	(0.109)	Stock	**L3N1**
	4	(101.6)	120	250	37	(6)	0.26	(0.118)	Stock	**L4A99**
	4	(101.6)	240	250	37	(6)	0.26	(0.118)	Stock	**L4A104**
	4	(101.6)	240	400	58	(9)	0.26	(0.118)	Stock	**L4A47**
	4	(101.6)	240	500	73	(11)	0.26	(0.118)	Stock	**L4A53**
	4	(101.6)	240	600	88	(14)	0.26	(0.118)	Stock	**L4A44**
	4	(101.6)	240	750	110	(17)	0.26	(0.118)	Stock	**L4A100**
	4	(101.6)	240	1000	146	(23)	0.26	(0.118)	Stock	**L4A71**
	5	(127)	120	250	28	(4)	0.29	(0.132)	Stock	**L5A76**
	5	(127)	240	250	28	(4)	0.29	(0.132)	Stock	**L5A107**
	5	(127)	240	500	57	(9)	0.29	(0.132)	Stock	**L5A24**
	5	(127)	240	750	86	(13)	0.29	(0.132)	Stock	**L5A31**
	5	(127)	240	1000	114	(18)	0.29	(0.132)	Stock	**L5A77**
	5 ⅜	(85.7)	120	800	84	(13)	0.30	(0.136)	Stock	**L5G3**
	5 ⅜	(85.7)	240	800	84	(13)	0.30	(0.136)	Stock	**L5G1**
	6	(152.4)	120	300	28	(4)	0.34	(0.154)	Stock	**L6A28**
	6	(152.4)	240	300	28	(4)	0.34	(0.154)	Stock	**L6A64**
	6	(152.4)	240	500	47	(7)	0.34	(0.154)	Stock	**L6A73** ①
	6	(152.4)	240	750	70	(11)	0.34	(0.154)	Stock	**L6A70**
	6	(152.4)	240	1000	93	(14)	0.34	(0.154)	Stock	**L6A71** ①
	6	(152.4)	120	1500	139	(22)	0.34	(0.154)	Stock	**L6A163**
	6	(152.4)	240	1500	140	(22)	0.34	(0.154)	Stock	**L6A94** ①
	6 ½	(165.1)	120	500	43	(7)	0.38	(0.172)	Stock	**L6J43**
	6 ½	(165.1)	240	500	43	(7)	0.38	(0.172)	Stock	**L6J55**
	7	(177.8)	120	500	39	(6)	0.40	(0.181)	Stock	**L7A42**
	7	(177.8)	240	500	39	(6)	0.40	(0.181)	Stock	**L7A15** ①
	7	(177.8)	240	1000	79	(12)	0.40	(0.181)	Stock	**L7A37** ①
	7	(177.8)	240	1500	118	(18)	0.40	(0.181)	Stock	**L7A12** ①
	8	(203.2)	120	500	34	(5)	0.47	(0.213)	Stock	**L8A96** ①
	8	(203.2)	240	500	34	(5)	0.47	(0.213)	Stock	**L8A46** ①
	8	(203.2)	240	850	58	(9)	0.47	(0.213)	Stock	**L8A115** ①
	8	(203.2)	240	1000	68	(10)	0.47	(0.213)	Stock	**L8A10** ①
	8	(203.2)	240	1500	102	(16)	0.47	(0.213)	Stock	**L8A37** ①
	8	(203.2)	240	2000	137	(21)	0.47	(0.213)	Stock	**L8A80** ①

CONTINUED

① MI leads available from stock. Add "Z" after Code No. to order.

Cartridge Heaters

FIREROD

Diameter inches	Sheath Length inches	(mm)	Volts	Watts	Watt Density W/in²	(W/cm²)	Approx. Net Wt. lbs	(kg)	Availability	Code No.
⅝	10	(254)	120	500	27	(4)	0.53	(0.240)	Stock	**L10A51**
	10	(254)	240	500	27	(4)	0.53	(0.240)	Stock	**L10A40** ①
	10	(254)	240	750	40	(6)	0.53	(0.240)	Stock	**L10A69**
	10	(254)	240	1000	54	(8)	0.53	(0.240)	Stock	**L10A52** ①
	10	(254)	480	1000	54	(8)	0.53	(0.240)	Stock	**L10A193** ②
	10	(254)	240	1500	81	(13)	0.53	(0.240)	Stock	**L10A8** ①
	10	(254)	240	2000	108	(17)	0.53	(0.240)	Stock	**L10A50** ①
	12	(304.8)	120	500	22	(3)	0.66	(0.300)	Stock	**L12A81** ①
	12	(304.8)	240	500	22	(3)	0.66	(0.300)	Stock	**L12A80** ①
	12	(304.8)	240	900	40	(6)	0.66	(0.300)	Stock	**L12A102**
	12	(304.8)	120	1000	45	(7)	0.66	(0.300)	Stock	**L12A82** ①
	12	(304.8)	240	1000	45	(7)	0.66	(0.300)	Stock	**L12A34** ①
	12	(304.8)	120	1500	66	(10)	0.66	(0.300)	Stock	**L12A147**
	12	(304.8)	240	1500	67	(10)	0.66	(0.300)	Stock	**L12A39** ①
	12	(304.8)	240	2000	89	(14)	0.66	(0.300)	Stock	**L12A63** ①
	14	(355.6)	240	3700	140	(22)	0.79	(0.358)	Stock	**L14A21**
	15	(381)	240	750	27	(4)	0.84	(0.381)	Stock	**L15A35** ①
	15	(381)	240	2400	84	(13)	0.84	(0.381)	Stock	**L15A20**
	15	(381)	480	2500	88	(14)	0.84	(0.381)	Stock	**L15A88** ②
	15	(381)	240	4000	141	(22)	0.84	(0.381)	Stock	**L15A41**
	16	(406.4)	240	2500	82	(13)	0.91	(0.412)	Stock	**L16A33**
	16	(406.4)	240	4500	148	(23)	0.91	(0.412)	Stock	**L16A40**
	18	(457.2)	240	1500	44	(7)	1.03	(0.467)	Stock	**L18A32**
	18	(457.2)	240	3000	87	(13)	1.03	(0.467)	Stock	**L18A34**
	18	(457.2)	240	4700	137	(21)	1.03	(0.467)	Stock	**L18A36**
	20	(508)	240	1500	40	(6)	1.25	(0.567)	Stock	**L20A19** ①
	20	(508)	240	3500	92	(14)	1.25	(0.567)	Stock	**L20A13**
	20	(508)	480	3500	92	(14)	1.25	(0.567)	Stock	**L20A96** ②
	20	(508)	240	4700	123	(19)	1.25	(0.567)	Stock	**L20A14**
	24	(609.6)	240	2000	44	(7)	1.47	(0.667)	Stock	**L24A19** ①
	24	(609.6)	240	4700	102	(15)	1.47	(0.667)	Stock	**L24A14**
	36	(914.4)	240	3000	43	(7)	2.30	(1.04)	Stock	**L36A8**
¾	2 ¼	(57.2)	120	200	49	(8)	0.19	(0.086)	Stock	**N2E8**
	3	(76.2)	120	250	43	(7)	0.24	(0.109)	Stock	**N3A11**
	3	(76.2)	240	500	85	(13)	0.24	(0.109)	Stock	**N3A12** ①
	4	(101.6)	120	250	31	(5)	0.31	(0.141)	Stock	**N4A16** ①
	4	(101.6)	240	500	61	(9)	0.31	(0.141)	Stock	**N4A17** ①
	4	(101.6)	240	1000	122	(19)	0.31	(0.141)	Stock	**N4A15**
	5	(127)	120	300	28	(4)	0.38	(0.172)	Stock	**N5A19**
	5	(127)	240	500	47	(7)	0.38	(0.172)	Stock	**N5A12** ①
	5	(127)	240	1000	95	(15)	0.38	(0.172)	Stock	**N5A20** ①
	6	(152.4)	120	500	39	(6)	0.44	(0.200)	Stock	**N6A19**
	6	(152.4)	240	500	39	(6)	0.44	(0.200)	Stock	**N6A20** ①
	6	(152.4)	240	1000	78	(12)	0.44	(0.200)	Stock	**N6A21** ①
	6	(154.4)	480	1000	78	(12)	0.44	(0.200)	Stock	**N6A225** ②
	6	(152.4)	240	1500	116	(18)	0.44	(0.200)	Stock	**N6A82**
	6	(152.4)	240	2000	155	(24)	0.44	(0.200)	Stock	**N6A22** ①
	7	(177.8)	120	500	33	(5)	0.51	(0.231)	Stock	**N7A15**
	7	(177.8)	240	500	33	(5)	0.51	(0.231)	Stock	**N7A1** ①
	7	(177.8)	240	1000	66	(10)	0.51	(0.231)	Stock	**N7A16** ①
	8	(203.2)	120	500	28	(4)	0.58	(0.263)	Stock	**N8A19**

CONTINUED

① MI leads available from stock. Add "Z" after Code No. to order.
② Units with 480 volts cannot be supplied with LA lead terminations.

Cartridge Heaters

FIREROD

Diameter inches	Sheath Length inches	(mm)	Volts	Watts	Watt Density W/in²	(W/cm²)	Approx. Net Wt. lbs	(kg)	Availability	Code No.
¾	8	(203.2)	240	500	28	(4)	0.58	(0.263)	Stock	**N8A20** ①
	8	(203.2)	240	1000	57	(9)	0.58	(0.263)	Stock	**N8A21** ①
	8	(203.2)	240	2000	114	(17)	0.58	(0.263)	Stock	**N8A22** ①
	10	(254)	240	1000	45	(7)	0.72	(0.327)	Stock	**N10A15** ①
	10	(254)	240	2000	90	(14)	0.72	(0.327)	Stock	**N10A14** ①
	12	(304.8)	240	1000	37	(6)	0.84	(0.381)	Stock	**N12A15** ①
	12	(304.8)	240	2000	74	(11)	0.84	(0.381)	Stock	**N12A24**
	12	(304.8)	480	2000	74	(11)	0.84	(0.381)	Stock	**N12A198** ②
	12	(304.8)	240	4000	148	(23)	0.84	(0.381)	Stock	**N12A25**
	13	(304.8)	240	1000	34	(5)	0.93	(0.422)	Stock	**N13A26** ①
	14	(355.6)	240	1250	40	(6)	1.03	(0.467)	Stock	**N14A22** ①
	14	(355.6)	240	2500	79	(12)	1.03	(0.467)	Stock	**N14A20**
	14	(355.6)	240	4500	142	(22)	1.03	(0.467)	Stock	**N14A21**
	15	(381)	240	1500	44	(22)	1.09	(0.494)	Stock	**N15A26** ①
	16	(406.4)	240	1800	49	(8)	1.14	(0.517)	Stock	**N16A26** ①
	16	(406.4)	240	4700	129	(20)	1.14	(0.517)	Stock	**N16A18**
	18	(457.2)	240	2000	49	(8)	1.25	(0.567)	Stock	**N18A13**
	18	(457.2)	240	5000	122	(19)	1.25	(0.567)	Stock	**N18A15**
	20	(508)	240	1150	25	(4)	1.40	(0.635)	Stock	**N20A21** ①
	20	(508)	240	2250	49	(8)	1.40	(0.635)	Stock	**N20A22** ①
	20	(508)	240	5250	115	(18)	1.40	(0.635)	Stock	**N20A10**
	24	(609.6)	240	1375	25	(4)	1.80	(0.816)	Stock	**N24A24**
	24	(609.6)	240	2750	50	(8)	1.80	(0.816)	Stock	**N24A23**
	24	(609.6)	480	2750	50	(8)	1.80	(0.816)	Stock	**N24A78** ②
	24	(609.6)	240	5500	100	(16)	1.80	(0.816)	Stock	**N24A13**
	36	(914.4)	240	2500	30	(6)	2.50	(1.13)	Stock	**N36A4**

① MI leads available from stock. Add "Z" after Code No. to order.
② Units with 480 volts cannot be supplied with LA lead terminations.

Cartridge Heaters

FIREROD

Heaters for Hot Runner Systems

Diameter inches	Sheath Length inches	(mm)	Volts	Watts	Watt Density W/in²	(W/cm²)	Approx. Net Wt. lbs	(kg)	Availability	Code No.	Incoe® Part No.
⅜	1 ¾	(44.5)	240	200	142	(22)	0.09	(0.041)	Stock	**G1NX39E**	TJ38017
	2	(50.8)	240	250	152	(24)	0.09	(0.041)	Stock	**G2AX163B**	TJ38020
	2 ½	(63.5)	240	250	112	(17)	0.10	(0.045)	Stock	**G2JX131D**	TJ38025
	3	(76.2)	240	260	92	(14)	0.10	(0.045)	Stock	**G3AX238K**	TJ38030
	3 ½	(88.9)	240	320	91	(14)	0.12	(0.054)	Stock	**G3JX114K**	TJ38035
	4	(101.6)	240	370	92	(14)	0.12	(0.054)	Stock	**G4AX255D**	TJ38040
	4 ½	(114.3)	240	420	90	(14)	0.13	(0.059)	Stock	**G4JX84E**	TJ38045
	5	(127)	240	470	108	(17)	0.14	(0.064)	Stock	**G5AX183E**	TJ38050
	5 ½	(139.7)	240	525	91	(14)	0.15	(0.068)	Stock	**G5JX64C**	TJ38055
	6	(152.4)	240	575	90	(14)	0.15	(0.068)	Stock	**G6AX222D**	TJ38060
	6 ½	(165.1)	240	625	93	(15)	0.16	(0.073)	Stock	**G6JX34C**	TJ38065
	7	(177.8)	240	675	92	(14)	0.17	(0.077)	Stock	**G7AX105C**	TJ38070
	7 ½	(190.5)	240	725	101	(16)	0.18	(0.082)	Stock	**G7JX36D**	TJ38075
	8	(203.2)	240	775	91	(14)	0.19	(0.086)	Stock	**G8AX202C**	TJ38080
	3 ½	(88.9)	240	420	92	(14)	0.17	(0.077)	Stock	**J3JX103C**	TJ12035
	4	(101.6)	240	490	90	(14)	0.19	(0.086)	Stock	**J4AX372A**	TJ12040
	4 ½	(114.3)	240	550	80	(12)	0.20	(0.091)	Stock	**J4JX62C**	TJ12045
½	5	(127)	240	625	89	(14)	0.22	(0.100)	Stock	**J5AX178B**	TJ12050
	5 ½	(139.7)	240	700	91	(14)	0.23	(0.104)	Stock	**J5JX54B**	TJ12055
	6	(152.4)	240	775	104	(16)	0.25	(0.113)	Stock	**J6AX412A**	TJ12060
	6 ½	(165.1)	240	850	104	(16)	0.26	(0.118)	Stock	**J6JX45C**	TJ12065
	7 ½	(190.5)	240	975	100	(16)	0.29	(0.132)	Stock	**J7JX88A**	TJ12075

Note: All heaters have Type J thermocouple in location C and 36 inch swaged-in leads.

Cartridge Heaters

HT FIREROD®

Performance Capabilities

- Platen temperatures to 1800°F (980°C)
- Maximum watt density to 100 W/in^2 (15.5 W/cm^2)
- Maximum voltage 277V~(ac) to ground
- Length tolerance:
  +0, -4 percent standard diameters;
  +0, -8 percent for special diameters

Features and Benefits

- **High temperature seal** prevents exposure to the atmosphere which minimizes oxidation of the winding wires. The end result is longer life of the element.
- **Incoloy® sheath** is treated for better emissivity, which transfers heat more efficiently.

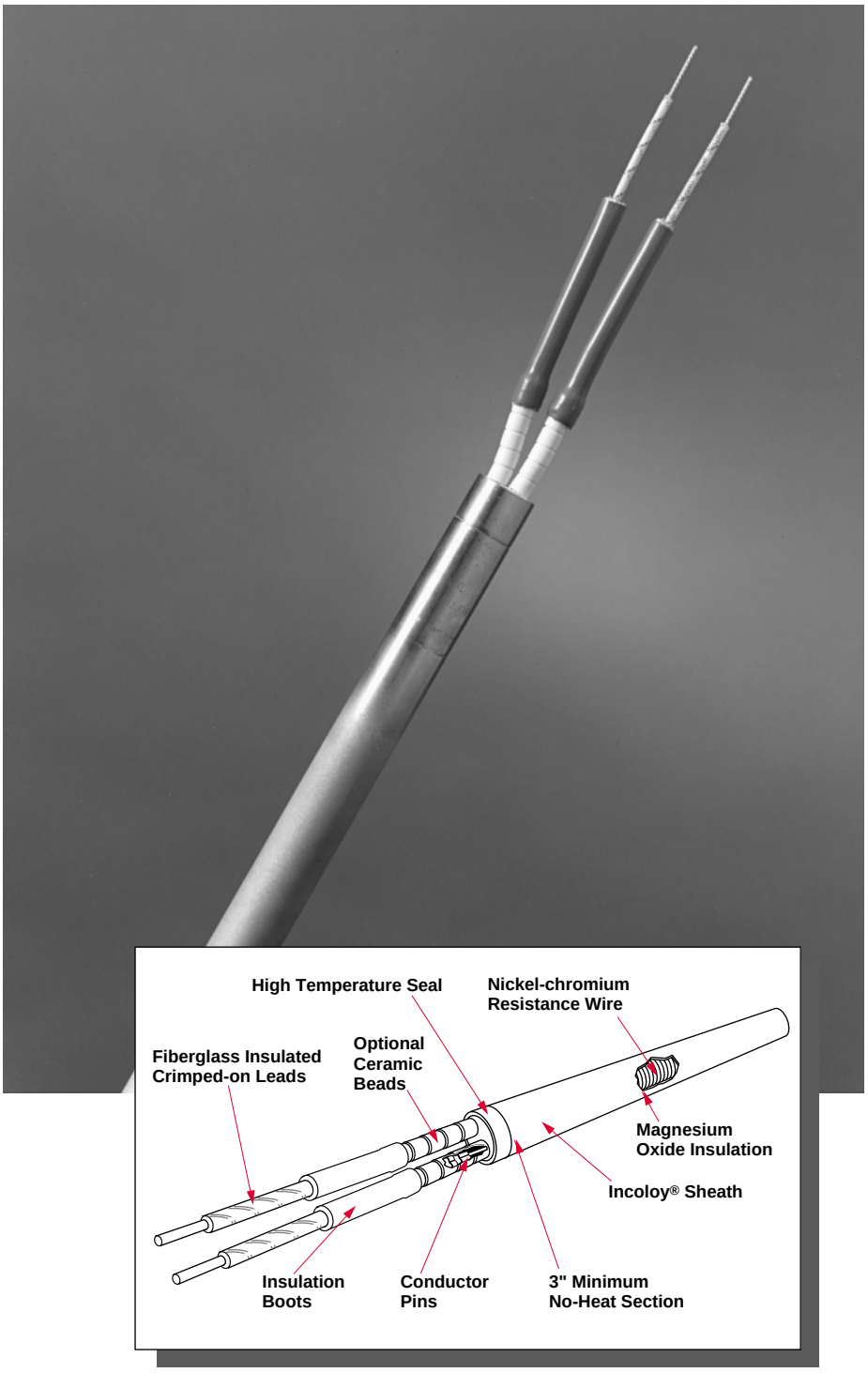

Made-to-Order Availability

Nominal Diameter inches	Actual Diameter inches	Max Amps
½	0.496 ± 0.004	10
⅝	0.580 ± 0.004	23
	0.621 ± 0.004	23
¾	0.710 ± 0.004	46
	0.746 ± 0.004	46
1	0.960 ± 0.004	46
	0.996 ± 0.006	46

Contact the Watlow factory in St. Louis, Missouri, for special diameter requests.

Applications

- Thermo plastic
- Superplastic forming of titanium aircraft parts
- Diffusion bonding to laminate and shape titanium

Incoloy® is a registered trademark of Special Metals Corporation.

HT FIREROD

Applications and Technical Data

Continued

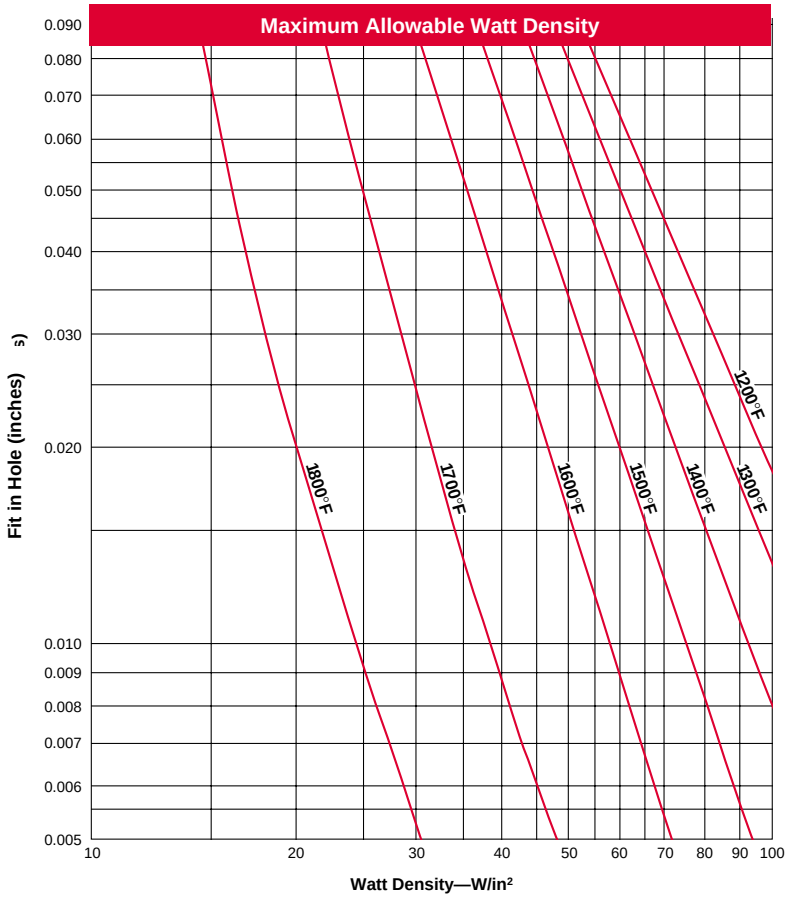

Options

Options available on the HT FIREROD:

- Thermocouples
- Independently controllable heat zones
- Bending (chart to the right)
- Distributed wattage
- MI leads
- Flanges
- Threaded fittings
- Post terminals
- Conduit NEMA boxes

Dia. in	Minimum Required No-Heat Length in (mm)	Bend Radius in (mm)
0.496	1 ⅞ (47)	¾ (19)
0.580	2 ¼ (57)	1 (25)
0.621	2 5/16 (59)	1 (25)
0.710	2 ¾ (70)	1 ¼ (32)
0.746	2 13/16 (71)	1 ¼ (32)
0.996	3 ⅜ (86)	1 ½ (38)

F.O.B.: St. Louis, Missouri

How to Order

HT FIRERODs are available only as **made-to-order** units. To place an order, please specify:

- Diameter
- Overall length
- No-heat length, if greater than three inches (76 mm)
- Volts
- Watts
- Intended application and temperature
- Atmospheric information
- Lead type and length or terminal configuration
- Options including finishing, internal construction and mounting.

Quick Ship • *Same day shipment on all stock units.*

Cartridge Heaters

FIREROD® Immersion

FIREROD® immersion heaters package to 300 W/in² (46.5 W/cm²) in a compact unit, giving you greater versatility in designing your heating system. This design solution is ideal for replacing large screw-plug immersion heaters.

Aside from its versatile design, these heaters come complete with a brass ¾ inch NPT double threaded screw plug, which allows you to add conduit boxes. Also, FIREROD immersion heaters are sealed at the lead end with a silicone rubber seal. Solid copper leads, with silicone rubber sleeve, are provided for unconfined wiring. These units are recommended for immersion in water or 90+ percent water soluble solutions.

Performance Capabilities

- Maximum operating temperature in water to 212°F (100°C) at atmospheric pressure
- Maximum watt density to 300 W/in² (46.5 W/cm²)
- Maximum voltage to 480V~(ac)

Features and Benefits

- **Nickel-chromium resistance wire,** precisely centered in the unit, assures even, efficient distribution of heat to the sheath.
- **Magnesium oxide insulation,** compacted to the proper density, results in high dielectric strength and contributes to faster heat-up.
- **Incoloy® sheath** resists corrosion from water.
- **Metallurgically-bonded conductor pins** overlap the resistance wire inside the core, ensuring trouble-free electrical continuity.
- **Lead end with silicone rubber seal** protects the heater against moisture contamination.
- **Optional stainless steel fittings** are available for use in corrosive applications.

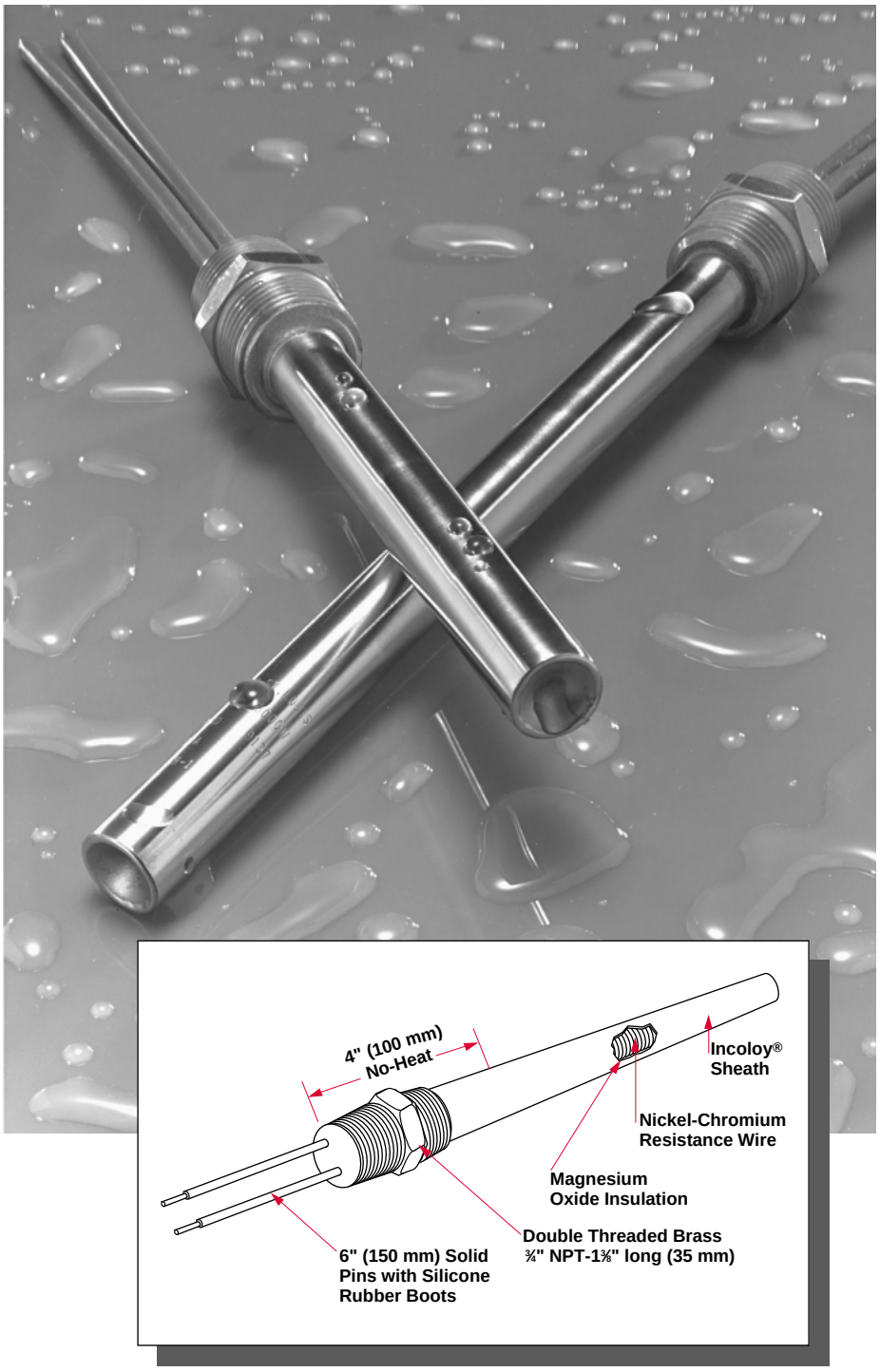

- **Horizontal through the wall tank mounting** makes set-up faster.
- **240 and 480V~(ac)** give flexibility in wiring the heater for use in your particular application.

Applications

- Plastic reclamation
- Food preparation
- Lab equipment

Incoloy® is a registered trademark of Special Metals Corporation.

FIREROD Immersion

Applications and Technical Data

The small size and big capacity of FIREROD cartridge heating units make them ideal immersion heaters in cramped quarters. When heating liquids of low viscosity, FIRERODs have the high watt density to pack more heat into tight spots. For water heating applications a rating of 150 to 300 W/in^2 is recommended. (Laboratory tests show that under certain conditions ratings as high as 700 W/in^2 are safe.) For longer life at high watt densities:

- The FIREROD unit should be in the main body of the liquid and not in a restricted space.
- The FIREROD heater should be covered with liquid at all times.
- The heater should not be allowed to cycle on and off too frequently.
- Scale should not form.

When heating viscous liquids, such as oils, watt densities must be kept low to prevent carbonization at the heater sheath. FIREROD cartridges offer advantages for heating viscous materials where long life and high quality outweigh the usual economic considerations. As in all immersion applications, scale build-up on the sheath and sludge on the bottom of the tank must be carefully controlled to assure long heater life.

Equipped with smaller threaded fittings than conventional immersion heaters, FIRERODs leave room for more units in the same space. Replacement of single FIREROD units in multiheater assemblies is fast and easy, and avoids discarding the complete assembly.

Moisture proof seals are available to give protection from damp atmospheres outside the tank.

Built for sustained operation at high temperatures, the FIREROD is especially valuable in heat-transfer applications with liquid metals. This factor alone has made the FIREROD heater a widely used component in the development of nuclear power systems.

Threaded fittings are furnished in either stainless steel or brass. FIRERODs with Incoloy® or 304 stainless steel sheaths are standard, but other sheath materials can be provided. Headers and sheath material should be suited to the material being heated.

Consult FIREROD section, pages 75 to 76 for more information.

Sheath Material Compositions

Sheath Material	Chemical Composition															
	Al	C	Co	Cr	Cu	Fe	Mn	Mo	Ni	P	S	Si	Ta	Ti	V	W
Stainless Steels																
304		0.08 ①		18/20		Bal	2 ①		8/12			1 ①				
316		0.08 ①		16/18		Bal	2 ①	2/3	10/14			1 ①				
Nickel Alloys																
Incoloy® 800	0.15/0.6	0.1		19/23	0.75	Bal	1.5		30/35		0.015	1.0		0.15/0.6		

① Maximum

See application guide for additional sheath material composition.

Cartridge Heaters

FIREROD Immersion

Applications and Technical Data

Continued

How to Order

To order stock FIREROD immersion heaters, specify Watlow code number and quantity.

For **made-to-order** units, please specify:

- Diameter
- Overall length
- Immersed length
- Heated length
- Watts
- Volts
- Threaded fitting material

Ordering Example: Specify FIREROD immersion heater ⅝ inch diameter, six inches overall length, immersed length of four inches, and two inches heated length. The heater is to be supplied with 1200 watts, 240 volts, ¾ inch NPT double threaded brass fitting, silicone seal and six inch pins, no leads.

Availability

Stock: Same day shipment

Made-to-Order: Consult Watlow

F.O.B.: St. Louis, Missouri

Diameter in	Overall length in	(mm)	Volts	Watts	Watt Density W/in²	(W/cm²)	Approx Fittings Type	Net Wt. lbs	(kg)	Availability	Code No.
⅝	6 ¼	(159)	120	500	127	(19.7)	Brass	0.58	(0.26)	Stock	**L6EX12A**
	6 ¼	(159)	120	500	127	(19.7)	SS	0.58	(0.26)	Stock	**L6EX12B**
	6 ¼	(159)	240	500	127	(19.7)	Brass	0.58	(0.26)	Stock	**L6EX13A**
	6 ¼	(159)	240	500	127	(19.7)	SS	0.58	(0.26)	Stock	**L6EX13B***
	6 ¼	(159)	120	750	191	(29.6)	Brass	0.58	(0.26)	Stock	**L6EX14A**
	6 ¼	(159)	120	750	191	(29.6)	SS	0.58	(0.26)	Stock	**L6EX14B**
	6 ¼	(159)	240	750	191	(29.6)	Brass	0.58	(0.26)	Stock	**L6EX15A**
	6 ¼	(159)	240	750	191	(29.6)	SS	0.58	(0.26)	Stock	**L6EX15B**
	6 ¼	(159)	120	1000	254	(39.4)	Brass	0.58	(0.26)	Stock	**L6EX16A**
	6 ¼	(159)	120	1000	254	(39.4)	SS	0.58	(0.26)	Stock	**L6EX16B**
	6 ¼	(159)	240	1000	254	(39.4)	Brass	0.58	(0.26)	Stock	**L6EX17A**
	6 ¼	(159)	240	1000	254	(39.4)	SS	0.58	(0.26)	Stock	**L6EX17B**
	6 ¾	(159)	240	1500	300	(46.5)	Brass	0.60	(0.27)	Stock	**L6NX7A**
	6 ¾	(171)	240	1500	300	(46.5)	SS	0.60	(0.27)	Stock	**L6NX7B**
	6 ¾	(171)	480	1500	300	(46.5)	Brass	0.60	(0.27)	Stock	**L6NX8A**
	6 ¾	(171)	480	1500	300	(46.5)	SS	0.60	(0.27)	Stock	**L6NX8B**
	7 ¾	(197)	240	2000	291	(45.1)	Brass	0.66	(0.30)	Stock	**L7NX5A**
	7 ¾	(197)	240	2000	291	(45.1)	SS	0.66	(0.30)	Stock	**L7NX5B**
	7 ¾	(197)	480	2000	291	(45.1)	Brass	0.66	(0.30)	Stock	**L7NX6A**
	7 ¾	(197)	480	2000	291	(45.1)	SS	0.66	(0.30)	Stock	**L7NX6B**
	8 ½	(216)	240	2500	300	(46.5)	Brass	0.68	(0.31)	Stock	**L8JX16A**
	8 ½	(216)	240	2500	300	(46.5)	SS	0.68	(0.31)	Stock	**L8JX16B**
	8 ½	(216)	480	2500	300	(46.5)	Brass	0.68	(0.31)	Stock	**L8JX17A**
	8 ½	(216)	480	2500	300	(46.5)	SS	0.68	(0.31)	Stock	**L8JX17B***
	9 ¼	(235)	240	3000	300	(46.5)	Brass	0.72	(0.33)	Stock	**L9EX11A**
	9 ¼	(235)	240	3000	300	(46.5)	SS	0.72	(0.33)	Stock	**L9EX11B**
	9 ¼	(235)	480	3000	300	(46.5)	Brass	0.72	(0.33)	Stock	**L9EX12A**
	9 ¼	(235)	480	3000	300	(46.5)	SS	0.72	(0.33)	Stock	**L9EX12B**
	11	(279)	240	4000	300	(46.5)	Brass	0.80	(0.36)	Stock	**L11AX59A**
	11	(279)	240	4000	300	(46.5)	SS	0.80	(0.36)	Stock	**L11AX59B**
	11	(279)	480	4000	300	(46.5)	Brass	0.80	(0.36)	Stock	**L11AX60A**
	11	(279)	480	4000	300	(46.5)	SS	0.80	(0.36)	Stock	**L11AX60B**

CONTINUED

* Limited quantities available, consult factory for delivery.

Cartridge Heaters

F.O.B.: St. Louis, Missouri

FIREROD Immersion

Diameter in	Overall length in	(mm)	Volts	Watts	Watt Density W/in²	(W/cm²)	Approx Fittings Type	Net Wt. lbs	(kg)	Availability	Code No.
⅝	12 ¾	(324)	240	5000	300	(46.5)	Brass	0.89	(0.41)	Stock	**L12NX4A**
	12 ¾	(324)	240	5000	300	(46.5)	SS	0.89	(0.41)	Stock	**L12NX4B**
	12 ¾	(324)	480	5000	300	(46.5)	Brass	0.89	(0.41)	Stock	**L12NX5A**
	12 ¾	(324)	480	5000	300	(46.5)	SS	0.89	(0.41)	Stock	**L12NX5B**
	14 ½	(368)	240	6000	300	(46.5)	Brass	0.95	(0.43)	Stock	**L14JX8A**
	14 ½	(368)	240	6000	300	(46.5)	SS	0.95	(0.43)	Stock	**L14JX8B**
	14 ½	(368)	480	6000	300	(46.5)	Brass	0.95	(0.43)	Stock	**L14JX9A**
	14 ½	(368)	480	6000	300	(46.5)	SS	0.95	(0.43)	Stock	**L14JX9B**
	18	(457)	240	8000	295	(45.7)	Brass	1.14	(0.52)	Stock	**L18AX43A**
	18	(457)	240	8000	295	(45.7)	SS	1.14	(0.52)	Stock	**L18AX43B**
	18	(457)	480	8000	295	(45.7)	Brass	1.14	(0.52)	Stock	**L18AX44A**
	18	(457)	480	8000	295	(45.7)	SS	1.14	(0.52)	Stock	**L18AX44B**
	21 ¼	(540)	240	10000	300	(46.5)	Brass	1.3	(0.59)	Stock	**L21EX1A**
	21 ¼	(540)	240	10000	300	(46.5)	SS	1.3	(0.59)	Stock	**L21EX1B**
	21 ¼	(540)	480	10000	300	(46.5)	Brass	1.3	(0.59)	Stock	**L21EX2A**
	21 ¼	(540)	480	10000	300	(46.5)	SS	1.3	(0.59)	Stock	**L21EX2B**
	24 ¾	(629)	480	12000	300	(46.5)	Brass	1.5	(0.68)	Stock	**L24NX1A**
	24 ¾	(629)	480	12000	300	(46.5)	SS	1.5	(0.68)	Stock	**L24NX1B***
	29 ¾	(756)	480	15000	300	(46.5)	Brass	1.8	(0.82)	Stock	**L29NX5A**
	29 ¾	(756)	480	15000	300	(46.5)	SS	1.8	(0.82)	Stock	**L29NX5B***
	35	(889)	480	18000	300	(46.5)	Brass	2.0	(0.91)	Stock	**L35AX5A**
	35	(889)	480	18000	300	(46.5)	SS	2.0	(0.91)	Stock	**L35AX5B**

* Limited quantities available, consult factory for delivery.

Quick Ship • *Same day shipment on all stock units.*

Cartridge Heaters

FIREROD® Bolt

The high performance FIREROD® that has served the heater industry for almost 30 years has been upgraded with a conduit box and wooden handle.

When inserted into a hollow bolt, this heater lengthens the bolt by heat expansion allowing the nut to be further wrench-tightened. The FIREROD bolt is then de-energized and removed. Upon cooling, the bolt contracts to a tight fit.

Performance Capabilities

- Part temperatures to 1000°F (540°C)
- Maximum watt density to 100 W/in^2 (15.5 W/cm^2)

Features and Benefits

- **Conduit box** has been added for wiring convenience.
- **Wooden handle** is attached for ease of handling the heater.
- **Magnesium oxide insulation,** compacted to the proper density, results in high dielectric strength and contributes to faster heat-up.
- **Nickel-chromium resistance wire**, precisely wound through the heated length, assures even, efficient distribution of heat to the sheath.
- **Conductor pins metallurgically-bonded** to the resistance wires, ensure trouble-free electrical continuity.
- **UL® approved flexible stranded wires,** with silicone-fiberglass sleeve, insulate the wires to temperatures of 480°F (250°C).

Applications

- Power plants
- Shipyards
- Press & die manufacturers
- Construction contractors
- Boiler manufacturers

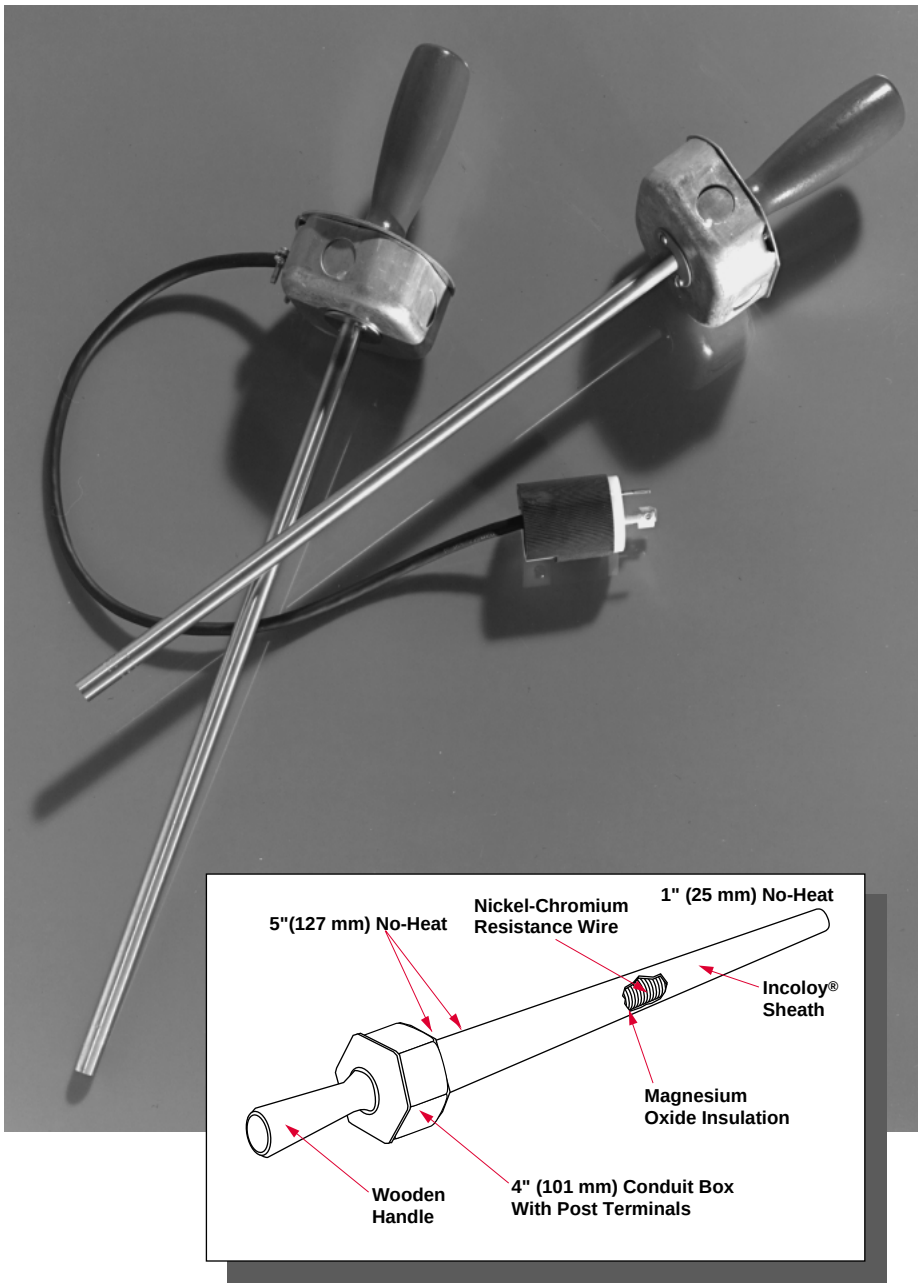

Applications and Technical Data

FIREROD Bolt Specifications											
Diameter ±0.005 in		0.460	0.496	0.553	0.580	0.621	0.688	0.710	0.746	0.813	0.996
Maximum Volts		240	240	240	480	480	480	480	480	480	480
Maximum Amps		9.7	9.7	14	23	23	23	46	46	46	46
Maximum Watts	**120**	1,160	1,160	1,680	2,760	2,760	2,760	5,520	5,520	5,520	5,520
	240	2,320	2,320	5,520	5,520	5,520	5,520	11,000	11,000	11,000	11,000
1 PH	**480**	—	—	11,000	11,000	11,000	11,000	22,000	22,000	22,000	22,000
3 PH	**Available**	NO	NO	NO	NO	NO	NO	YES	YES	YES	YES

UL® is a registered trademark of Underwriter's Laboratories.

Incoloy® is a registered trademark of Special Metals Corporation.

Cartridge Heaters

FIREROD Bolt

How to Order

To order stock FIREROD bolt heaters, specify:

- Watlow code number
- Quantity
- Diameter
- Overall length
- Heated length
- Watts
- Volts
- Lead type or post terminals

Availability

Stock: Same day shipment

Standard: Shipment within four to six weeks

Made-to-Order: Shipment within four to six weeks

F.O.B.: St. Louis, Missouri

Diameter in	Overall Length in	(mm)	Heated Length in	(mm)	Volts	Watts	Watt Density W/in²	(W/cm²)	Approx. Net Wt. lbs	(kg)	Availability	Code No.
0.460	18	(457.2)	12	(304.8)	240	1700	98	(15)	1.4	(0.64)	Standard	**H18AX7A**
	24	(609.6)	18	(457.2)	240	2300	88	(14)	1.6	(0.73)	Standard	**H24AX4A**
	30	(762.0)	24	(609.6)	240	2300	66	(10)	1.8	(0.82)	Standard	**H30AX2A**
	36	(914.4)	30	(762.0)	240	2300	53	(8)	2.1	(0.95)	Standard	**H36AX1A**
0.496	18	(457.2)	12	(304.8)	240	1900	100	(16)	1.5	(0.68)	Standard	**J18AX157A**
	24	(609.6)	18	(457.2)	240	2300	82	(13)	1.8	(0.82)	Standard	**J24AX86A**
	30	(762.0)	24	(609.6)	240	2300	62	(10)	2.0	(0.91)	Standard	**J30AX34A**
	36	(914.4)	30	(762.0)	240	2300	49	(8)	2.4	(1.08)	Standard	**J36AX15A**
0.553	18	(457.2)	12	(304.8)	240	1200	59	(9)	1.8	(0.82)	Stock	**K18AX9A**
	24	(609.6)	18	(457.2)	240	1700	55	(9)	2.0	(0.91)	Stock	**K24AX4A**
	30	(762.0)	24	(609.6)	240	2500	60	(9)	2.3	(1.04)	Stock	**K30AX7A**
	36	(914.4)	30	(762.0)	240	3200	62	(10)	2.7	(1.22)	Stock	**K36AX3A**
0.580	18	(457.2)	12	(304.8)	240	2200	100	(16)	1.9	(0.86)	Standard	**K18AX12A**
	24	(609.6)	18	(457.2)	240	3300	100	(16)	2.1	(0.95)	Standard	**K24AX5A**
	30	(762.0)	24	(609.6)	240	4350	100	(16)	2.4	(1.08)	Standard	**K30AX8A**
	36	(914.4)	30	(762.0)	240	5450	100	(16)	2.9	(1.32)	Standard	**K36AX4A**
0.621	18	(457.2)	12	(304.8)	240	2350	100	(16)	2.0	(0.91)	Standard	**L18AX176A**
	24	(609.6)	18	(457.2)	240	3500	100	(16)	2.3	(1.04)	Standard	**L24AX101A**
	30	(762.0)	24	(609.6)	240	4700	100	(16)	2.7	(1.22)	Standard	**L30AX63A**
	36	(914.4)	30	(762.0)	240	5500	94	(15)	3.1	(1.41)	Standard	**L36AX41A**
0.688	18	(457.2)	12	(304.8)	240	1500	59	(9)	2.3	(1.04)	Stock	**M18AX5A**
	24	(609.6)	18	(457.2)	240	2100	55	(9)	2.7	(1.22)	Stock	**M24AX5A**
	30	(762.0)	24	(609.6)	240	3000	58	(9)	3.1	(1.41)	Stock	**M30AX4A**
	36	(914.4)	30	(762.0)	240	4000	62	(10)	3.6	(1.63)	Stock	**M36AX5A**
0.710	18	(457.2)	12	(304.8)	240	2700	100	(16)	2.3	(1.04)	Standard	**M18AX6A**
	24	(609.6)	18	(457.2)	240	4000	100	(16)	2.8	(1.27)	Standard	**M24AX6A**
	30	(762.0)	24	(609.6)	240	5350	100	(16)	3.2	(1.45)	Standard	**M30AX5A**
	36	(914.4)	30	(762.0)	240	5500	83	(13)	3.6	(1.63)	Standard	**M36AX9A**
0.746	18	(457.2)	12	(304.8)	240	2800	100	(16)	2.5	(1.13)	Standard	**N18AX119A**
	24	(609.6)	18	(457.2)	240	4200	100	(16)	3.0	(1.36)	Standard	**N24AX91A**
	30	(762.0)	24	(609.6)	240	5500	98	(15)	3.4	(1.54)	Standard	**N30AX30A**
	36	(914.4)	30	(762.0)	240	5500	78	(12)	3.8	(1.72)	Standard	**N36AX25A**
0.813	18	(457.2)	12	(304.8)	240	1800	60	(9)	2.7	(1.22)	Stock	**P18AX1A**
	24	(609.6)	28	(711.2)	240	2500	55	(9)	3.2	(1.45)	Stock	**P24AX2A**
	30	(762.0)	24	(609.6)	240	3500	55	(9)	3.7	(1.68)	Stock	**P30AX1A**
	42	(1066.8)	36	(914.4)	240	6000	66	(10)	4.8	(2.18)	Stock	**P42AX2A**
0.996	18	(457.2)	12	(304.8)	240	3750	100	(16)	3.4	(1.54)	Standard	**T18AX36A**
	24	(609.6)	18	(457.2)	240	5500	98	(15)	4.0	(1.81)	Standard	**T24AX40A**
	30	(762.0)	24	(609.6)	240	5500	73	(11)	4.7	(2.13)	Standard	**T30AX20A**
	36	(914.4)	30	(762.0)	240	5500	59	(9)	5.3	(2.40)	Standard	**T36AX23A**

Cartridge Heaters

Metric FIREROD® Cartridge

The Watlow FIREROD® not only set the industry standard for cartridge heaters, it continues making improvements in construction and design. Among those improvements is the metric FIREROD, a variation of the FIREROD cartridge heater which was built to meet the exacting specifications of the global market.

Like its counterpart, the metric FIREROD consistently outperforms other cartridge heaters because of design solutions like its exclusive resistance wire winding process. Plus details, like bringing the resistance wire closer to the sheath, and compacting the MgO insulation, maximize heat transfer. The end result is longer service life and better efficiency.

Performance Capabilities

- Part temperatures to 870°C (1600°F) on Incoloy® sheath
- Watt densities to 60 W/cm^2 (400 W/in^2)

Features and Benefits

- **Nickel-chromium resistance wire,** precisely wound and centered in the unit, assures even, efficient distribution of heat to the sheath.
- **Conductor pins** metallurgically bonded to the resistance wire ensure trouble-free electrical continuity.
- **Magnesium oxide insulation of specific grain and purity,** swaged to the proper density, results in high dielectric strength and contributes to faster heat-up.

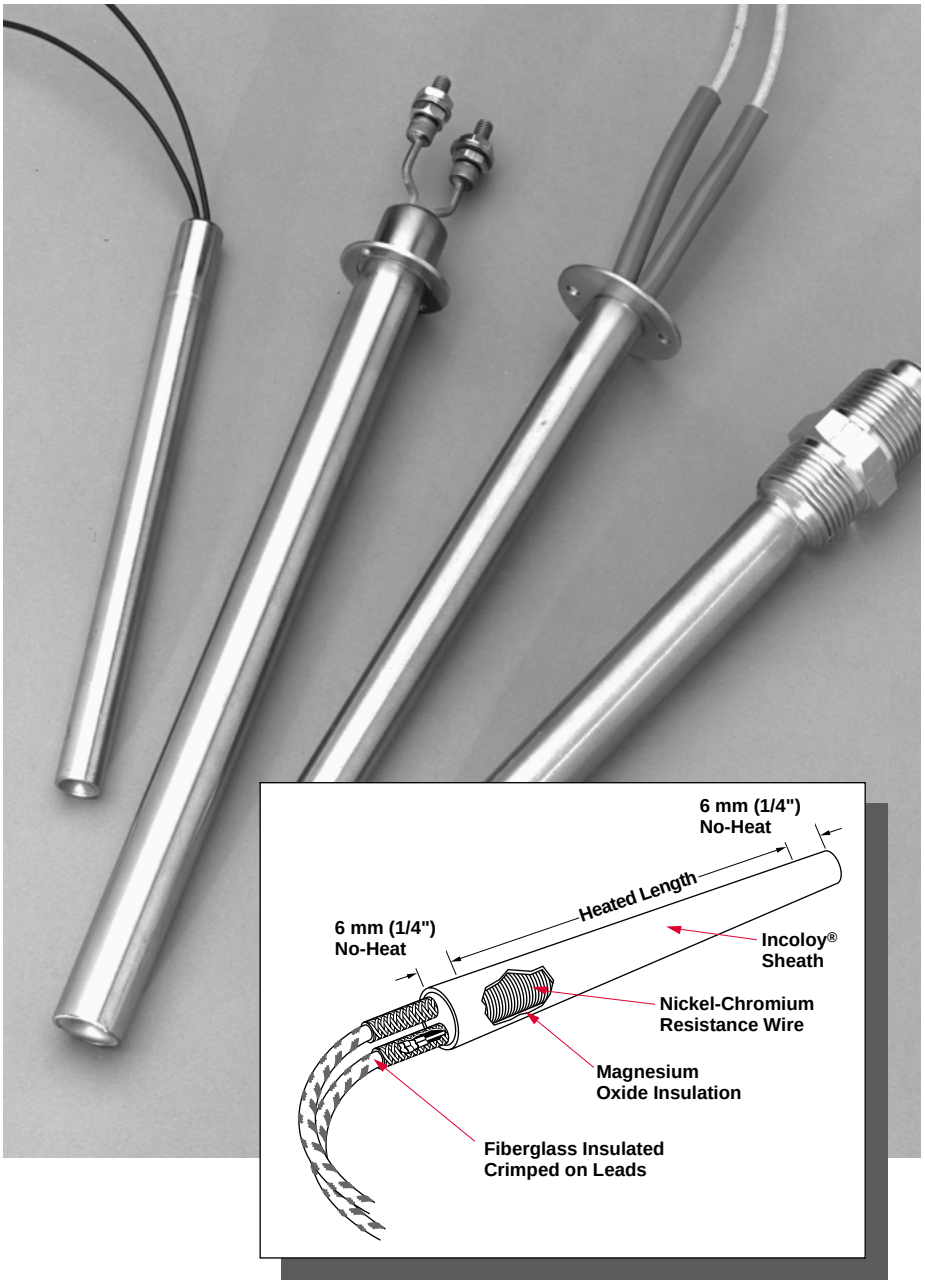

- **Incoloy® sheath** resists oxidation and corrosion from chemicals, heat and atmospheres.
- **Minimal spacing between the element wire and sheath** results in lower internal temperature, giving you the ability to design with fewer or smaller heaters that operate at higher watt densities.

Applications

- Molds
- Dies
- Platens
- Hot plates
- Sealings
- Gas and liquid heating

Incoloy® is a registered trademark of Special Metals Corporation.

Cartridge Heaters

Metric FIREROD Cartridge

Applications and Technical Data

The *Electrical Data* table will assist you in selecting the correct metric FIREROD heater for your application, according to available voltage, amperage and wattage.

Electrical Data

Heater Diameter (mm)	6.5	8	10	12.5	16	20
Nominal Diameter (in)	0.256	0.315	0.394	0.492	0.630	0.787
Maximum Voltage	250	250	250	400	480	480
Crimped on Leads						
Maximum Amps	4.4	6.7	9.7	9.7	23	23
Maximum Wattage @ 230V	1010	1540	2230	2230	5290	5290
Maximum Wattage @ 400V				3880	9200	9200
Swaged-in Leads						
Maximum Amps	3.1/4.4 ①	4.4/7.2 ①	7.6/12.5	7.6/12.5 ①	7.6/12.5 ①	12.5/21
Maximum Wattage @ 230V	710/1010	1010/1560	1750/2875	1750/2875	1750/2875	2875/4830
Maximum Wattage @ 400V	—	—	—	3040/5000	3040/5000	5000/8400

① On certain lead constructions, maximum amperage is 3.1, 4.4, 7.6 or 12.5. In these instances, amperage is determined by internal construction and the current carrying capacity of internal parts to the lead wire. For more information about these amperage restrictions or higher current requirements, please contact your Watlow sales engineer or authorized distributor.

Tolerances

Diameter:

-0.02 mm, -0.08 mm
(-0.0008 inch, -0.0031 inch)

Length:

±2% with ±2.4 mm
(±3/32 inch) minimum

Wattage:

+10 percent, -5 percent. Wattage decreases approximately five percent with temperature. Wattage tolerances are for heaters at operating temperature.

Resistance:

+5 percent, -10 percent. Resistance is measured at room temperature following first heater operation.

Camber:

0.25 mm (0.01 inch) maximum on any length to 300 mm (12 inches). For lengths over 300 mm:

$$\frac{[\text{Heater Length (mm)}]^2}{182{,}900}$$

Cartridge Heaters

Metric FIREROD Cartridge

Maximum Allowable Watt Density

The following four graphs detail maximum allowable watt densities for applications involving metal heating or steam, air and gas heating. Please review these respective graphs and applicable data to determine the correct watt density for your application.

Heating Metals

The *Maximum Watt Density—Heating Metals* graph will tell you either the maximum hole fit or recommended watt density of the heater. Enter the chart with either known variable, part fit in hole dimension or watt density. Then find the application temperature by reading up or over on the chart.

If the fit of the heater in the hole dimension is not known, it is easily determined. Subtract the minimum diameter of the metric FIREROD (nominal diameter minus tolerance) from the maximum hole diameter.

For example, take a hole diameter of 16.1 mm minus a heater diameter of 16 mm - 0.08 mm. The hole fit would be 0.18 mm. For metric FIREROD heaters in square holes or grooves, contact your Watlow sales engineer or authorized distributor for fit in hole dimension.

Correction Factors:

Also note, the *Maximum Watt Density—Heating Metals* graph depicts metric FIRERODs used in steel parts. Therefore, for either stainless steel or aluminum and brass, refer to applicable correction factors ① and ② .

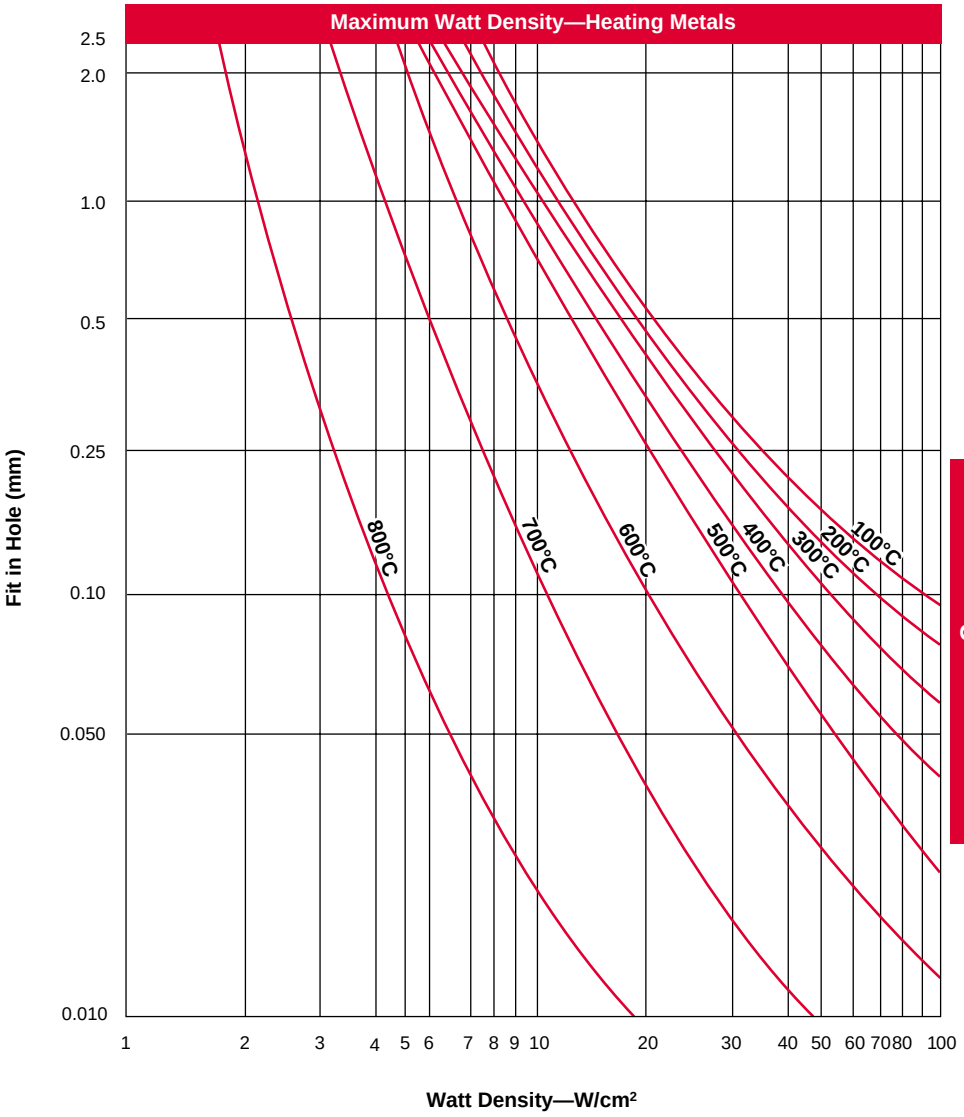

① For stainless steel, enter the graph with a fit 0.04 mm (0.0015 inch) larger than actual.

② For aluminum and brass, enter the graph with a temperature 55°C (100°F) above actual temperature.

For English-base watt density graphs see FIREROD, page 77.

Metric FIREROD Cartridge

Maximum Allowable Watt Density

Continued

Heating Steam, Air and Gases

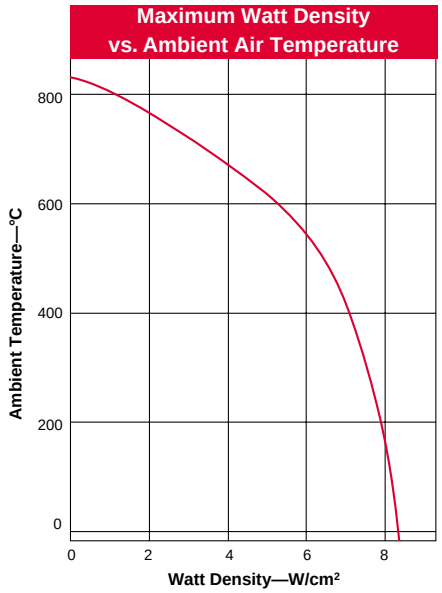

Watt Density vs. Ambient Air

The *Watt Density vs. Ambient Air Temperature* graph shows the maximum allowable watt density when one metric FIREROD heater is operated in air or similar gas.

For metric FIREROD s grouped in a single row, with no less than one diameter between elements, multiply value from graph by 0.95. When a reflector is placed behind the heaters, multiply the maximum allowable watt density value from the graph by 0.85.

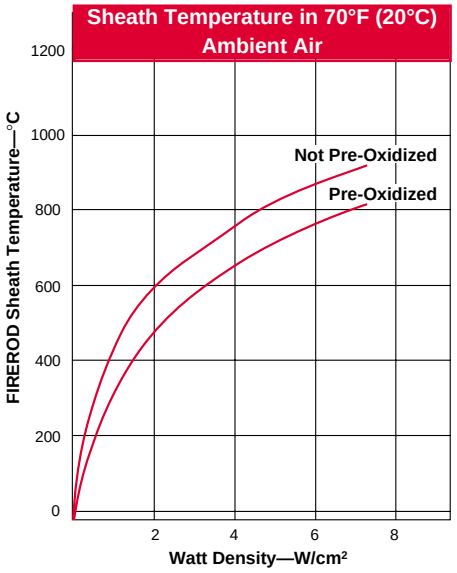

Sheath Temperature in Ambient Air

The *Sheath Temperature in Ambient Air* graph indicates the watt density required to bring a metric FIREROD heater to a given sheath temperature when operated in 20°C (70°F) ambient air.

At 7 W/cm² (44 W/in²), the sheath temperature would be 790°C (1450°F). At this temperature, one year life would be expected, provided that cycling is not too frequent. Higher temperatures would result in reduced heater life.

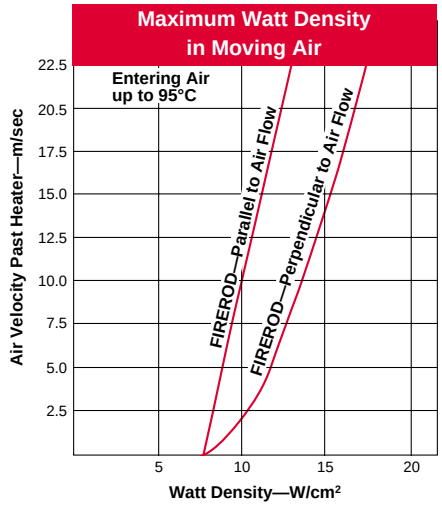

Watt Density in Moving Air

The *Watt Density in Moving Air* graph gives the maximum allowable watt density of a metric FIREROD heater in moving air.

If the volumetric flow rate of air is known in m³/s (or CFM), divide this value by the net free area in m² (or ft²) around the heater to determine air flow velocity. The net free area is the total area of the enclosure minus the area occupied by the heater.

For English-base watt density graphs see FIREROD Cartridge, pages 77 and 78.

Cartridge Heaters

Metric FIREROD Cartridge

Termination Options

Swaged-in Flexible Leads

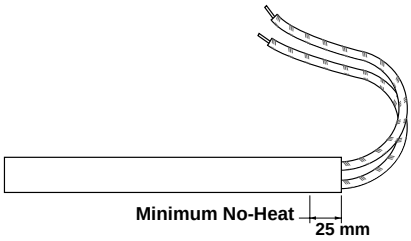

Swaged-in flexible leads, with a silicone-fiberglass insulation, are recommended for applications in which the leads must be bent at the exit point from the heater. Unless longer length is specified, 250 mm (10 inch) leads are supplied.

Heaters 150 mm (6 inches) or shorter generally have a six mm (¼ inch) no-heat section. Heaters to 250 mm (10 inches) require a 25 mm (one inch) no-heat section. Heaters greater than 250 mm may require more than a 25 mm no-heat section. To order, please specify **swaged-in flexible leads**.

Right Angle Leads

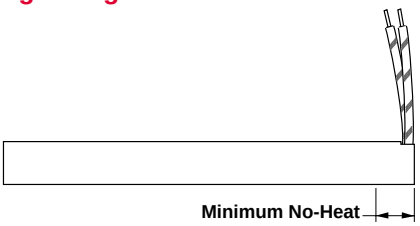

Metric FIREROD Diameter mm	Minimum No-Heat Length mm (inches)
6.5	11 (7/16)
8	11 (7/16)
10	13 (½)
12.5	16 (⅝)
16	19 (¾)
20	22 (⅞)

Right angle leads are used in applications with a high degree of flexing and when space limitations are critical. Lead wires exit at a 90 degree angle through the side of the heater sheath. To order, specify **right angle leads** and lead length.

Stainless Steel Braid

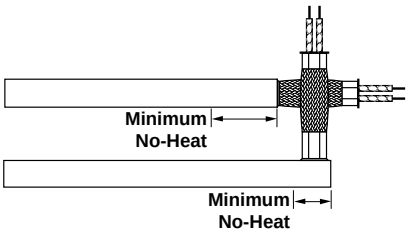

Stainless steel braid is designed to protect leads from abrasion against sharp edges. It is the most flexible of Watlow's protective lead arrangements.

When the leads exit straight out, the braid is swaged into the no-heat section of the heater. When the leads exit at a right angle, a crimp connector is used to attach the braids.

Unless otherwise specified, leads are 350 mm (14 inches) and the braid is 300 mm (12 inches) long. To order, specify either **straight or right angle stainless steel braid**, lead length and no-heat section.

Metric FIREROD Dia. mm	Min. No-Heat Length Straight mm (inches)	Min. No-Heat Length Right Angle mm (inches)
6.5	29 (1 ⅛)	14 (½)
8	29 (1 ⅛)	14 (½)
10	38 (1 ½)	16 (⅝)
12.5	38 (1 ½)	17 (⅔)
16	38 (1 ½)	22 (⅞)
20	38 (1 ½)	30 (1 3/16)

Metric FIREROD Cartridge

Termination Options

Continued

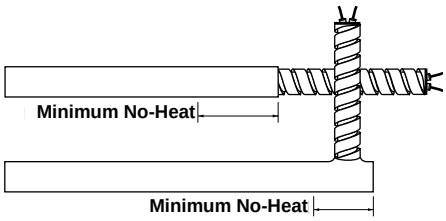

Stainless Steel Hose

Stainless steel hose provides the best protection against abrasion from sharp edges or abrasive equipment. It also offers ease of handling and wiring in abrasive environments.

When the leads exit at a right angle to the heater, the hose is silver-soldered to the sheath. Unless otherwise specified, leads are 350 mm (14 inches) long and the hose is 305 mm (12 inches) long. To order, specify **stainless steel hose**, lead length and no-heat section.

Metric FIREROD Diameter mm	Min. No-Heat Length		Stainless Steel Hose O.D. mm (inches)
	Straight mm (inches)	Right Angle mm (inches)	
6.5	29 (1 1/8)	14 (1/2)	5.6 (9/16)
8	29 (1 1/8)	14 (1/2)	6.5 (1/4)
10	38 (1 1/2)	16 (5/8)	7.2 (5/16)
12.5	38 (1 1/2)	17 (2/3)	9.5 (3/8)
16	38 (1 1/2)	22 (7/8)	12.7 (1/2)
20	38 (1 1/2)	30 (1 3/16)	15.9 (5/8)

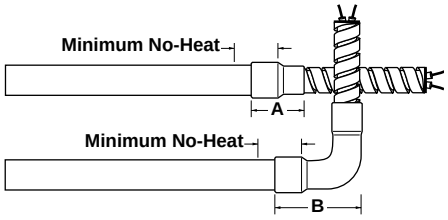

Galvanized Conduit

Galvanized conduit equals stainless steel hose in its abrasion protection.

The conduit is attached with 90 degree elbow copper coupler which overlaps the heater sheath.

Unless specified, 250 mm (10 inch) leads are supplied. To order, specify **galvanized conduit**, lead length and no-heat section.

Metric FIREROD Diameter mm	Minimum No-Heat Length mm (inches)	Dimension A mm (inches)	Dimension B mm (inches)	Galvanized Conduit O.D. mm (inches)
6.5	12 (7/16)	22 (7/8)	29 (1 1/8)	10 (3/8)
8	12 (7/16)	22 (7/8)	29 (1 1/8)	10 (3/8)
10	14 (1/2)	22 (7/8)	29 (1 1/8)	10 (3/8)
12.5	16 (5/8)	28 (1 1/8)	30 (1 3/16)	14 (1/2)
16	19 (3/4)	28 (1 1/8)	34 (1 5/16)	14 (1/2)
20	22 (7/8)	29 (1 1/8)	36 (1 7/16)	16 (5/8)

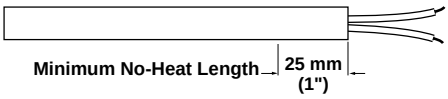

Teflon® Seal and Leads

Teflon® seal and leads protect the heater against moisture/ contamination from lubricating oil, cleaning solvents, plastic material or fumes and organic tapes. This seal is effective to 200°C (400°F) under continuous operation.

Please note, when ordering this option, that a 25 mm (one inch) minimum no-heat section is required to allow for construction. Additional no-heat may be required to keep the seal below effective temperatures. To order, specify **Teflon® seal and leads** and lead length.

Teflon® is a registered trademark of E.I. du Pont de Nemours & Company.

Cartridge Heaters

Metric FIREROD Cartridge

Termination Options
Continued

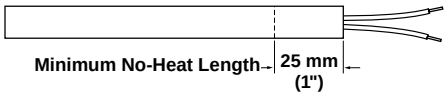

Silicone Rubber Seal and Leads

Silicone rubber seal and leads protect the heater against moisture/contamination from lubricating oil, cleaning solvents, plastic material or fumes and organic tapes. This seal is effective to 230°C (450°F) under continuous operation. Epoxy potting for up to 260°C (500°F) for continuous operation is available upon request.

Please note, when ordering this option, that a 25 mm (one inch) minimum unheated section is required to allow for construction. Additional no-heat may be required to keep the seal below effective temperatures. To order, specify **silicone or epoxy seal and leads** and lead length.

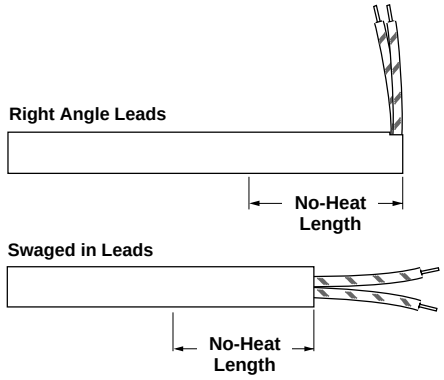

No-Heat Section

No-heat sections are recommended in applications where leads may be exposed to excessive heat, thus requiring a cooler lead end. Also use when heat is not required along the entire length of the metric FIREROD. Unheated extensions are available on all diameters with both pin style and swaged in leads. To order, specify **no-heat** section and length of no-heat.

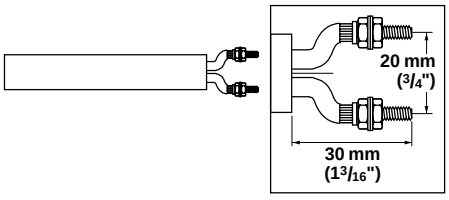

Post Terminals

Post terminals provide a quick, secure connection with ring or fork connectors or bus bars. Threaded M4 X 12 mm studs are soldered to the solid power pins. Nuts and washers are provided. This termination is available on 16 and 20 mm diameter units. To order, specify **post terminals.**

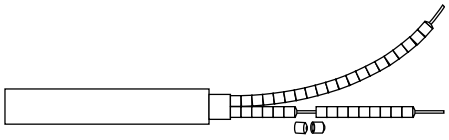

Ceramic Bead Insulation

Ceramic bead insulation protects the leads from high temperature ambients above 450°C (840°F). The beads fit over solid conductors that are extended long enough to reach a cooler area where flexible wires can be attached. To order, specify **ceramic bead insulation.**

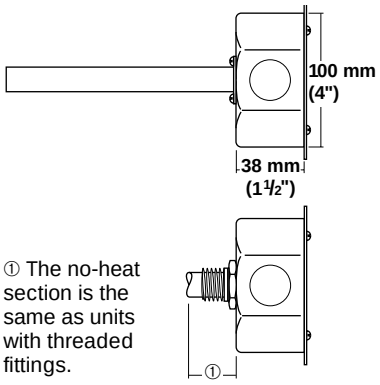

① The no-heat section is the same as units with threaded fittings.

Terminal Box

NEMA 1, NEMA 4 (moisture-proof) and NEMA 7 (explosion-proof) octagonal terminal boxes can be mounted to a flange or threaded fitting on the 12.5, 16 and 20 mm diameter units. These 100 mm (four inch) terminal boxes have conduit knockouts to protect electrical connections.

Aluminum and macrolon plastic terminal boxes are also available in the following sizes:

- 50 X 50 X 30 mm nominal size for heaters to 10 mm in diameter;
- 80 X 80 X 55 mm nominal size for heaters 12.5 mm or larger in diameter.

To order, specify **terminal box**, NEMA type and/or material type.

Metric FIREROD Cartridge

Options

Accessories

Watlube

Watlube is an electrically non-conductive lubricant that acts as a barrier against high temperature oxidation, thus making heater removal easier. In addition, it aids in the transfer of heat from the metric FIREROD to the block. However, do not use it as a substitute for proper hole fit. Watlube is packaged in 118 ml (four ounce) bottles.

To order, specify **Watlube**.

External Finishing

Centerless Grinding

Centerless grinding can be used to finish precision diameters, thus permitting closer heater-to-part fit and higher watt densities. Centerless grinding of metric FIREROD heaters with swaged-in flexible leads is limited to 305 mm (12 inch) lead length. Longer lead lengths are available, but require external connection. To order, specify **centerless grinding**.

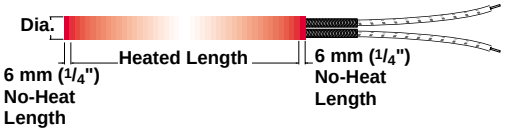

Distributed Wattage

Distributed wattage varies the watt density along the length of the heater. This construction technique is used to compensate for heat losses along the edges of heated parts. To order, specify **distributed wattage** and give the length and wattage for each section.

Individually Controlled Heat Zones

Individually controlled heat zones give the flexibility of controlling temperature by zones, along the length of the metric FIREROD. This is an advantage for heating requirements of certain applications, like sealing bars. This internal construction can be ordered on 12.5, 16 and 20 mm diameter units. If not specified, 250 mm (10 inch) crimped on leads will be supplied. To order, specify **individually controlled heat zones** as well as length and wattage per zone and length of crimped on leads.

Dual Voltage

When the metric FIREROD requires the flexibility of operating on two voltages, use this internal construction. Dual voltage is available on 12.5, 16 and 20 mm diameter units. If not specified, 250 mm (10 inch) crimped on leads will be supplied. To order, specify **dual voltage**, voltage requirements and length of crimped on leads.

Cartridge Heaters

Metric FIREROD Cartridge

Options
Continued

Mounting Methods

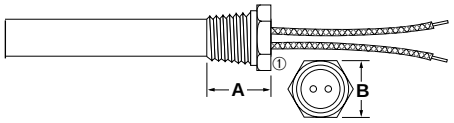

Threaded Fittings

DIN Thread Size

Metric FIREROD Diameter mm	Minimum No-Heat Length mm (in)	Thread Size DIN 13	A mm (in)	B mm (in)	Length of Threaded Section mm (in)
6.5	16 (5/8)	M10 X 1.0	10 (3/8)	12 (7/16)	6 (1/4)
8	16 (5/8)	M12 X 1.0	10 (3/8)	14 (1/2)	6.5 (1/4)
10	18 (11/16)	M14 X 1.5	11 (7/16)	17 (5/8)	6.5 (1/4)
12.5	19 (3/4)	M16 X 1.5	12 (7/16)	19 (3/4)	7.5 (5/16)
16	20 (3/4)	M20 X 1.5	14 (1/2)	24 (15/16)	9 (3/8)
20	22 (7/8)	M26 X 1.5	15 (9/16)	30 (1 3/16)	10 (3/8)

① Swaged in unit pictured.

NPT Thread Size

Metric FIREROD Diameter mm	Minimum No Heat Length mm (in)	Thread Size NPT (in)	A mm (in)	B mm (in)	Length of Threaded Section mm (in)
6.5	19 (3/4)	(1/8)	13 (1/2)	11 (7/16)	10 (3/8)
8	22 (7/8)	(1/4)	16 (5/8)	14 (1/2)	13 (1/2)
10	22 (7/8)	(1/4)	16 (5/8)	14 (1/2)	13 (1/2)
12.5	25 (1)	(3/8)	19 (3/4)	17.5 (11/16)	15 (9/16)
16	28 (1 1/8)	(1/2)	22 (7/8)	22 (7/8)	16 (5/8)
20	32 (1 1/4)	(3/4)	25 (1)	29 (1 1/8)	19 (3/4)

Threaded fittings allow for fast, water-tight installation of the heater into a threaded hole. These fittings can be ordered in either brass or stainless steel. Double threaded fittings are also available. See dimensions noted on the *DIN Size and NPT Size Threaded Fittings* charts or contact your Watlow sales engineer or authorized distributor if you need to exceed limitations shown. To order, specify either brass or stainless steel **threaded fittings**.

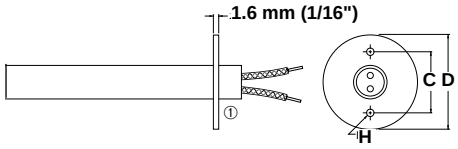

Flanges

Stainless steel flanges are a convenient mounting method as well as a way to position a heater within an application. These flanges can be located in any no-heat section of the heater sheath. To order, specify **flange**, flange size and location.

Metric FIREROD Diameter mm	Flange Size	D mm (inches)	C mm (inches)	H mm (inches)
6.5, 8, 10,12.5, 16 ②	FS	25 (1)	19 (3/4)	4.3 (3/16)
6.5, 8, 10, 12.5, 16, 20	FM	38 (1 1/2)	28.5 (1 1/8)	4.3 (3/16)
16, 20	FL	51 (2)	38 (1 1/2)	5.3 (3/16)

① Swaged in unit pictured.
② The FS flange for 16 mm diameter units have no “H” holes.

Metric FIREROD Cartridge

Options
Continued

Sensors

Internal Thermocouple

Style A

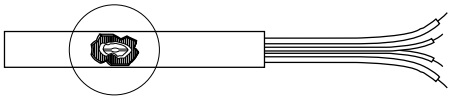

Style B

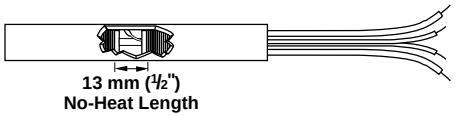

Style C

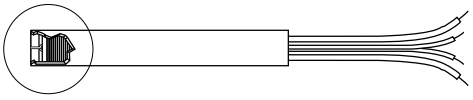

The **Style A** internal thermocouple can be used to evaluate heat transfer efficiency of an application a measure that enables you to cut energy costs and increase heater life.

The **Style B** internal thermocouple gives a good approximation of part temperature, and is available in all diameters. The thermocouple junction can be in contact with the inside of the heater sheath, located in the 13 mm (½ inch) no-heat section anywhere along the heater length.

A **Style C** internal thermocouple is useful in applications where material flows past the end of the heater, as in plastic molding. This junction is embedded in a special end disc. Style C is not available on 20 mm diameter units.

To order, specify **internal thermocouple Style A, B** or **C** and thermocouple **Type J, T, K** or **E**. If not specified, 250 mm (10 inch) thermocouple leads are supplied.

Thermocouple Types

ISA Code	Conductor Characteristics Positive	Negative	Temperature Range °C	(°F)
J	Iron (Magnetic)	Constantan (Non-magnetic)	-20 to 760	(0 to 1400)
K	Chromel® (Non-magnetic)	Alumel® (Magnetic)	-20 to 1260	(0 to 2300)

For other thermocouple types, contact your Watlow sales engineer or authorized distributor.

Alumel® and Chromel® are registered trademarks of Hoskins Manufacturing Co.

Made in Kronau, Germany

How to Order

Metric FIREROD cartridge heaters are available as **made-to-order** units only. To order, please specify:

- Diameter
- Overall length
- Volts
- Watts
- Lead type and length or terminal configuration
- Options

Availability

Made-to-Order: Shipment within three weeks.

Quick Ship • *Next day shipment on all stock units.*

Cartridge Heaters

Metric EB Cartridge

The Watlow EB cartridge heater is a proven performer like the metric FIREROD®. That's because the same quality materials go into its construction; MgO insulation, nickel-chromium resistance wire, silicone-fiberglass insulated lead wires. The only difference is that the EB cartridge is packaged in a more economical design. Instead of having the high watt density capabilities of a metric FIREROD, it's made for medium watt density applications.

Performance Capabilities

- Part temperatures to 600°C (1100°F)
- Maximum watt density to 30 W/cm² (190 W/in²)
- Maximum voltage to 480V~(ac)

Features and Benefits

- **Magnesium oxide insulation,** compacted to the proper density, results in high dielectric strength and contributes to faster heat-up.
- **Nickel-chromium resistance wire,** precisely wound through the heated length, assures even, efficient distribution of heat to the sheath.
- **Metallurgically-bonded conductor pins,** crimp-connected to the resistance wires, ensure trouble-free electrical continuity. This process provides lead flexibility just 8 mm (5/16 inch) from the end of the heater.
- **Flexible stranded wires,** with silicone-fiberglass sleeve, insulate the wires to temperatures of 250°C (480°F).
- **Optional lead end with silicone rubber seal** protects the leads against moisture and other contaminants.

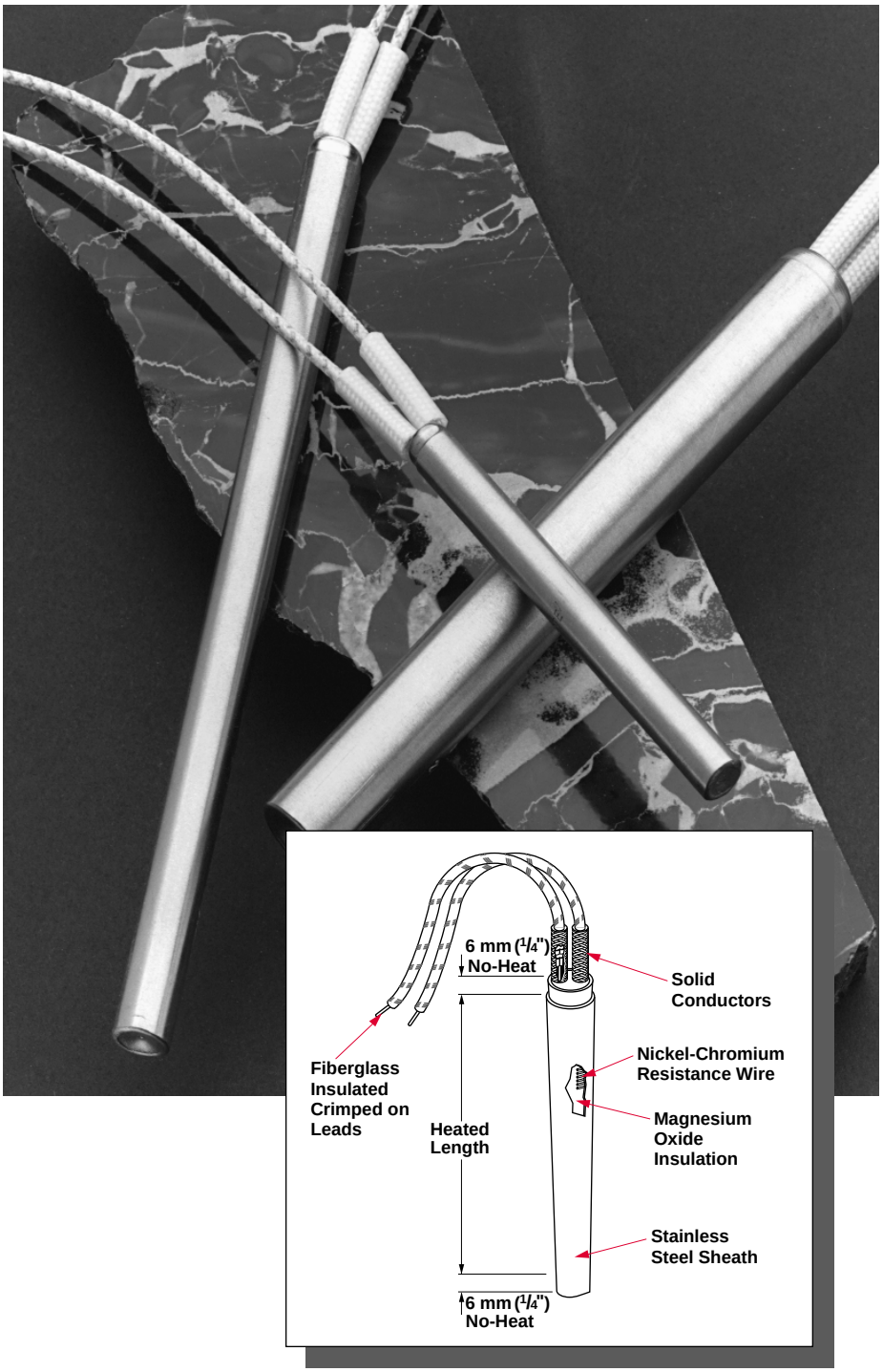

- **VDE component recognition** to 230V~(ac) according to VDE 0721 part 1/3.78 and part 2/3.78 Section E in connection with VDE 0720 part 1/11.74.

Applications

- Plastic injection molds, dies and sealing jaws
- Hot melt systems, labeling
- Industrial and textile manufacturing equipment

Metric EB Cartridge

Applications and Technical Data

Maximum Allowable Watt Density

Both the *Maximum Allowable Watt Density* metric and inch-base charts will tell you either the hole fit or recommended watt density in relationship to part temperature. Enter the chart with either known variable, part fit in hole dimension or watt density. Then find the part temperature by reading up or over on the chart. The part temperature curves shown are measured 13 mm (½ inch) from the heater in a mild steel block. For stainless steel blocks, enter the graph with a fit of 0.04 mm (0.0015 inch) larger than actual. For aluminum and brass blocks, enter the graph with a temperature 55°C (100°F) above actual block temperature.

On-Off Cycling: On-off cycling shortens heater life. If the heater cycles more than once per hour, multiply the watt density, shown on the chart, by 0.8 to determine the maximum allowable watt density for the application. If the heater cycles more than once a minute, multiply by 0.7.

Tolerances

Diameter: -0.02 mm, -0.08 mm (-0.0008 inch, -0.0031 inch)

Length: ±3 percent with ±2.4 mm (±3/32 inch) minimum

Resistance: +5 percent, -10 percent. Resistance is measured at room temperature following first heater operation.

Wattage: +10 percent, -5 percent. Wattage decreases approximately 5 percent with temperature. Wattage tolerances are for heaters at operating temperature.

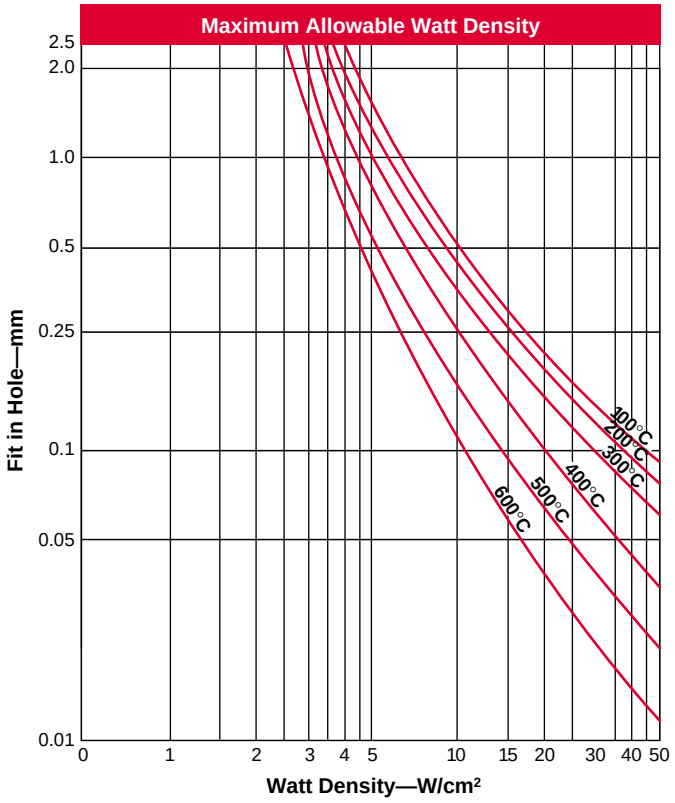

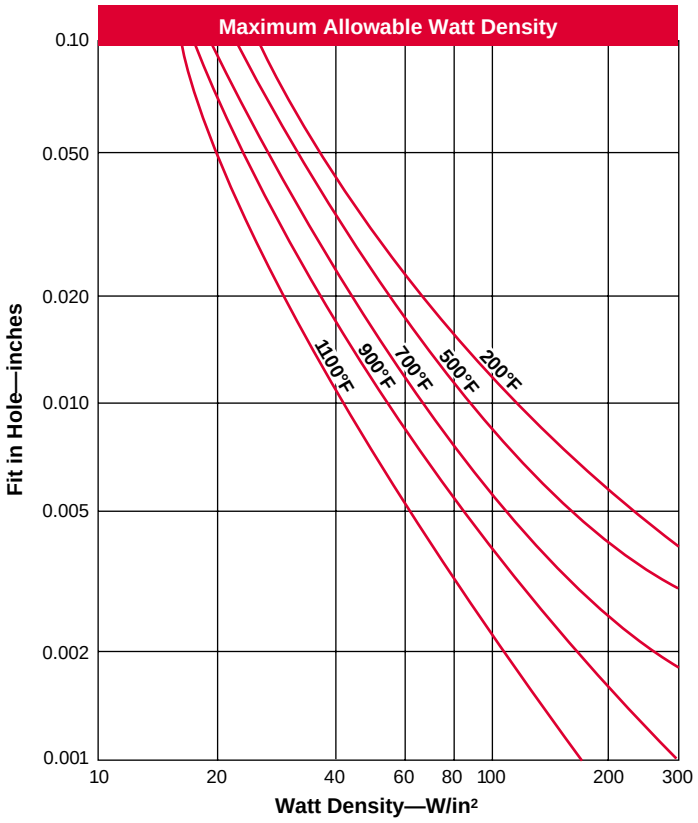

Cartridge Heaters

Metric EB Cartridge

Applications and Technical Data
Continued

Dimensional & Electrical Data

Heater Diameter (mm)	6.5	8	10	12.5	16	20
Nominal Diameter (in)	0.256	0.315	0.394	0.492	0.630	0.787
Maximum Voltage	250	250	250	400	480	480
Crimped-on Leads						
Maximum Amps	4.4	4.4	6.7	9.7	23	23
Maximum Wattage @ 230V	1010	1010	1540	2230	5290	5290
Maximum Wattage @ 400V				3880	9200	9200
Swaged-in Leads						
Maximum Amps	3.1/4.4 ①	3.1/4.4 ①	4.4	7.6/12.5 ②	7.6/12.5	12.5
Maximum Wattage @ 230V	710/1010	710/1010	1010	1750/2875	1750/2875	2875
Maximum Wattage @ 400V	—	—	—	3040/5000	3040/5000	5000

① On certain lead construction, maximum amperage is 3.1. Please consult Watlow.
② On certain lead construction, maximum amperage is 7.6. Please consult Watlow.

Termination Options

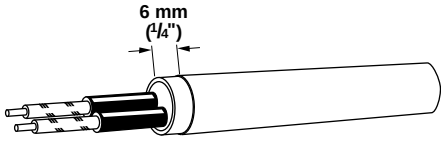

Crimped-on Lead

Crimped-on leads with a 6 mm (¼ inch) unheated section are recommended for applications where the lead wire temperature does not exceed 250°C (480°F).

Unless a longer length is specified, 250 mm (10 inch) leads will be supplied. To order, request **crimped-on leads** and desired lead length.

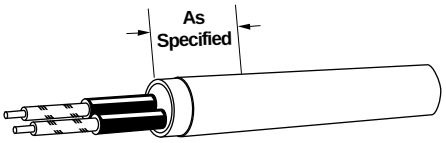

No-Heat Zone

An unheated section can be used to extend the leads safely into a cool zone in a high temperature application. Leads should be kept below 250°C (480°F) for maximum service life. To order, specify **no-heat zone** and length of unheated section.

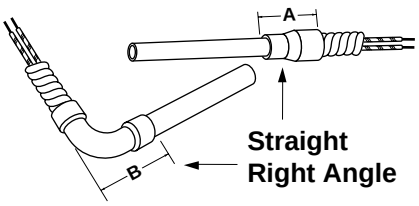

Galvanized Conduit

Flexible galvanized conduit can be installed over the leads for abrasion protection. It is attached with either a straight or 90 degree elbow copper coupler. The copper coupler overlaps the heater sheath by 6 mm (¼ inch). A no-heat section is required. To order, specify **galvanized conduit, straight** or **right angle.**

Stainless Steel Hose

Stainless steel hose also protects leads against abrasion. It is attached with a straight or 90 degree elbow copper coupler. The copper coupler overlaps the heater sheath by 6 mm (¼ inch).

It can also be swaged-in straight or silver soldered to the heater sheath at a right angle. A no-heat section is required. To order, specify **stainless steel hose, straight** or **right angle with copper coupler, straight swaged-in** or **right angle silver soldered.**

Cartridge Heaters

Metric EB Cartridge

Termination Options

Continued

Galvanized Conduit and Stainless Steel Hose Dimensions

Heater Diameter mm	Minimum No-Heat Length mm (inches)	Dimension A mm (inches)	Dimension B mm (inches)	Galvanized Conduit O.D. mm (inches)	Stainless Steel Hose O.D. mm (inches)
6.5	12 (7/16)	22 (7/8)	29 (1 1/8)	10 (3/8)	5.6 (3/16)
8	12 (7/16)	22 (7/8)	29 (1 1/8)	10 (3/8)	6.5 (1/4)
10	14 (1/2)	22 (7/8)	29 (1 1/8)	10 (3/8)	7.2 (5/16)
12.5	16 (5/8)	28 (1 1/8)	30 (1 3/16)	14 (9/16)	9.5 (3/8)
16	19 (3/4)	28 (1 1/8)	34 (1 3/8)	14 (9/16)	12.7 (1/2)
20	22 (7/8)	29 (1 1/8)	36 (1 7/16)	16 (5/8)	15.9 (5/8)

Dimensions are shown for designs with copper coupler only.

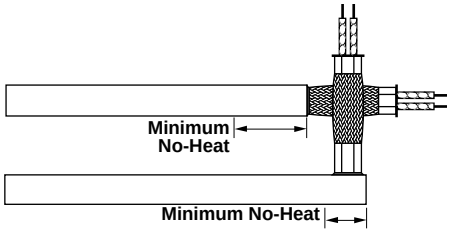

Stainless Steel Braid

Like stainless steel hose, stainless steel braid also protects against abrasion. Stainless steel braid is swaged-in straight or crimped-on to the heater at a right angle. Metal braid is recommended when excellent flexibility with good physical protection is needed. A unheated section is required. To order, specify **stainless steel braid, straight** or **right angle.**

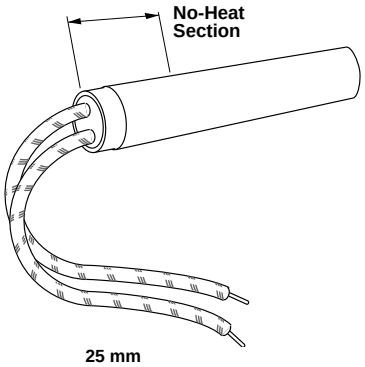

Swaged-in Flexible Lead

Swaged-in flexible leads, with a silicone-fiberglass insulation, are recommended for applications in which the leads must be bent at the exit point from the heater. Unless longer length is specified, 250 mm (10 inch) leads are supplied.

Heaters 140 mm (5 ½ inches) or shorter generally have a six mm (¼ inch) no-heat section. Heaters to 250 mm (10 inches) require a 25 mm (one inch) no-heat section. Heaters greater than 250 mm may require more than a 25 mm no-heat section. To order, please specify **swaged-in flexible leads.**

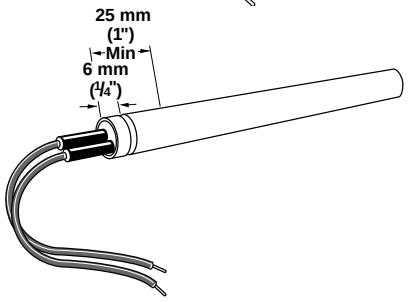

Moisture Resistant Seal

Silicone rubber moisture resistant seals can be provided at the lead end to virtually seal the heater. This seal is rated to 230°C (450°F) continuous operation.

A 25 mm (one inch) no-heat section is required at the lead end. Solid pin leads exit through the seal with crimped-on silicone rubber insulated lead wires and silicone rubber sleeves that extend into the seal. Swaged-in leads are also an option where flexibility at the lead exit is required. To order specify, **silicone rubber moisture resistant seal** and either **crimped-on** or **swaged-in leads**.

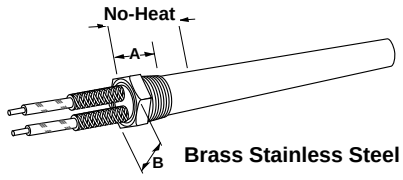

Threaded Fitting

Either brass or stainless steel threaded fittings for screw-in mounting can be added to units that have moisture resistant seals. Available dimensions are shown on the *Threaded Fittings* charts. To order, please request **brass** or **stainless steel threaded fittings** and location on the heater.

Note: For liquid immersion applications, please also specify heavy weld end disc.

Cartridge Heaters

Metric EB Cartridge

Termination Options
Continued

DIN Thread Size

Heater Diameter mm	Minimum No-Heat Length mm	(inches)	Thread Size DIN 13	Dimension A mm	(inches)	Dimension B mm	(inches)	Length of Threaded Section mm	(inches)
6.5	16	(5/8)	M 10 X 1	10	(3/8)	12	(7/16)	6	(1/4)
8	16	(5/8)	M 12 X 1	10	(3/8)	14	(1/2)	6.5	(1/4)
10	18	(11/16)	M 14 X 1.5	11	(7/16)	17	(5/8)	6.5	(1/4)
12.5	19	(3/4)	M 16 X 1.5	12	(7/16)	19	(3/4)	7.5	(9/16)
16	20	(3/4)	M 20 X 1.5	14	(9/16)	24	(15/16)	9	(3/8)
20	22	(7/8)	M 26 X 1.5	15	(9/16)	30	(1 3/16)	10	(3/8)

NPT Thread Size

Heater Diameter mm	Minimum No-Heat Length mm	(inches)	Thread Size NPT inches	Dimension A mm	(inches)	Dimension B mm	(inches)	Length of Threaded Section mm	(inches)
6.5	19	(3/4)	1/8	13	(1/2)	11	(7/16)	10	(3/8)
8	22	(7/8)	1/4	16	(5/8)	14	(1/2)	13	(1/2)
10	22	(7/8)	1/4	16	(5/8)	14	(1/2)	13	(1/2)
12.5	25	(1)	3/8	19	(3/4)	17.5	(11/16)	15	(9/16)
16	28	(1 1/8)	1/2	22	(7/8)	22	(7/8)	16	(5/8)
20	32	(1 1/4)	3/4	25	(1)	29	(1 1/8)	19	(3/4)

Style A

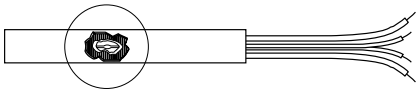

Style B

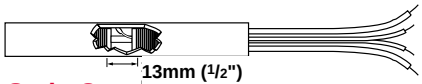

Style C

Internal Thermocouple

Style A is used to evaluate heat transfer efficiency of an application. The junction is located in the heater core to monitor the internal temperature of the heater.

Style B approximates part temperature, and is available in all diameters. The thermocouple junction can be in contact with the inside of the heater sheath, located in the 13 mm (½ inch) no-heat section anywhere along the heater length.

Style C is useful in applications where material flows past the end of the heater. This junction is embedded in a special end disc. Type C is available only on 6.5, 8, 10, 12.5 and 16 mm diameter units.

To order, specify **internal thermocouple**, **Style A, B** or **C** and **thermocouple ASTM Type J, T, K** or **E**. If not specified, 250 mm (10 inch) thermocouple leads are supplied.

Thermocouple Types

ASTM Code	Conductor Characteristics		Temperature Range	
	Positive	Negative	°C	(°F)
J	Copper	Constantan (Silver Color)	-60 to 370	(-75 to 700)
K	Chromel® (Non-Magnetic)	Alumel® (Magnetic)	-20 to 1260	(0 to 2300)

For other ASTM types, contact Watlow.

How to Order

To order stock AB cartridge heaters, please specify:

- Code number
- Termination options, and length of leads

For **made-to-order** units, please specify:

- Diameter
- Overall length
- Watts
- Termination options, and length of leads

Availability

Stock: Next day shipment

Made-to-Order: Shipment within three weeks

Alumel® and Chromel® are registered trademarks of Hoskins Manufacturing Co.

Metric EB Cartridge

Diameter mm	Sheath Length mm	(inches)	No-Heat Length mm	Watts	Watt Density W/cm²	(W/in²)	Availability	Code No.
6.5	40	(1 9/16)		50	9	(58)	Stock	**KEBE0040C001A**
	40	(1 9/16)		75	14	(90)	Stock	**KEBE0040C002A**
	40	(1 9/16)		100	19	(123)	Stock	**KEBE0040C003A**
	40	(1 9/16)		125	24	(155)	Stock	**KEBE0040C004A**
	40	(1 9/16)		150	28	(181)	Stock	**KEBE0040C005A**
	60	(2 3/8)		50	5	(32)	Stock	**KEBE0060C001A**
	60	(2 3/8)		100	11	(71)	Stock	**KEBE0060C002A**
	60	(2 3/8)		150	16	(103)	Stock	**KEBE0060C003A**
	60	(2 3/8)		200	21	(135)	Stock	**KEBE0060C004A**
	60	(2 3/8)		250	27	(174)	Stock	**KEBE0060C005A**
	80	(3 1/8)		100	7	(45)	Stock	**KEBE0080C001A**
	80	(3 1/8)		150	11	(71)	Stock	**KEBE0080C002A**
	80	(3 1/8)		200	15	(97)	Stock	**KEBE0080C003A**
	80	(3 1/8)		300	22	(142)	Stock	**KEBE0080C004A**
	80	(3 1/8)		450	33	(213)	Stock	**KEBE0080C005A**
	100	(3 15/16)		100	6	(39)	Stock	**KEBE0100C001A**
	100	(3 15/16)		200	11	(71)	Stock	**KEBE0100C002A**
	100	(3 15/16)		300	17	(110)	Stock	**KEBE0100C003A**
8.0	40	(1 9/16)		50	8	(52)	Stock	**KEBF0040C001A**
	40	(1 9/16)		75	11	(71)	Stock	**KEBF0040C002A**
	40	(1 9/16)		100	15	(97)	Stock	**KEBF0040C003A**
	40	(1 9/16)		150	23	(148)	Stock	**KEBF0040C004A**
	40	(1 9/16)		200	31	(200)	Stock	**KEBF0040C005A**
	60	(2 3/8)		75	6	(39)	Stock	**KEBF0060C001A**
	60	(2 3/8)		150	13	(84)	Stock	**KEBF0060C002A**
	60	(2 3/8)		200	17	(110)	Stock	**KEBF0060C003A**
	60	(2 3/8)		250	22	(142)	Stock	**KEBF0060C004A**
	60	(2 3/8)		300	26	(168)	Stock	**KEBF0060C005A**
	80	(3 1/8)		100	6	(39)	Stock	**KEBF0080C001A**
	80	(3 1/8)		200	12	(77)	Stock	**KEBF0080C002A**
	80	(3 1/8)		300	18	(116)	Stock	**KEBF0080C003A**
	80	(3 1/8)	25	400	33	(213)	Stock	**KEBF0080D001A**
	80	(3 1/8)	25	500	41	(265)	Stock	**KEBF0080D002A**
	100	(3 15/16)		100	5	(32)	Stock	**KEBF0100C001A**
	100	(3 15/16)		250	12	(77)	Stock	**KEBF0100C002A**
	100	(3 15/16)	25	400	23	(148)	Stock	**KEBF0100D001A**
	100	(3 15/16)	25	500	29	(187)	Stock	**KEBF0100D002A**
	100	(3 15/16)	25	600	35	(226)	Stock	**KEBF0100D003A**
	130	(5 1/8)	25	200	8	(52)	Stock	**KEBF0130D001A**
	130	(5 1/8)	25	350	14	(90)	Stock	**KEBF0130D002A**
	130	(5 1/8)	25	500	20	(129)	Stock	**KEBF0130D003A**
10.0	40	(1 9/16)		50	6	(39)	Stock	**KEBG0040C001A**
	40	(1 9/16)		100	12	(77)	Stock	**KEBG0040C002A**
	40	(1 9/16)		150	18	(116)	Stock	**KEBG0040C003A**
	40	(1 9/16)		200	24	(155)	Stock	**KEBG0040C004A**
	40	(1 9/16)		250	31	(200)	Stock	**KEBG0040C005A**
	60	(2 3/8)		100	7	(45)	Stock	**KEBG0060C001A**
	60	(2 3/8)		150	10	(65)	Stock	**KEBG0060C002A**
	60	(2 3/8)		200	14	(90)	Stock	**KEBG0060C003A**
	60	(2 3/8)		300	21	(135)	Stock	**KEBG0060C004A**
	60	(2 3/8)		400	28	(181)	Stock	**KEBG0060C005A**
	80	(3 1/8)		100	5	(32)	Stock	**KEBG0080C001A**
	80	(3 1/8)		200	10	(65)	Stock	**KEBG0080C002A**
	80	(3 1/8)		300	14	(90)	Stock	**KEBG0080C003A**
	80	(3 1/8)		400	19	(123)	Stock	**KEBG0080C004A**
	80	(3 1/8)		600	29	(187)	Stock	**KEBG0080C005A**
	100	(3 15/16)		200	7	(45)	Stock	**KEBG0100C001A**
	100	(3 15/16)		300	11	(71)	Stock	**KEBG0100C002A**
	100	(3 15/16)		400	15	(97)	Stock	**KEBG0100C003A**
	100	(3 15/16)		500	19	(123)	Stock	**KEBG0100C004A**
	100	(3 15/16)	25	700	33	(213)	Stock	**KEBG0100D001A**

CONTINUED

Note: All stock EB cartridge heaters 230V~(ac) and 1000 mm fiberglass insulated swaged-in leads.

Cartridge Heaters

Made in Kronau, Germany

Metric EB Cartridge

Diameter mm	Sheath Length mm	(inches)	No-Heat Length mm	Watts	Watt Density W/cm²	(W/in²)	Availability	Code No.
10.0	130	(5 1/8)		200	5	(32)	Stock	**KEBG0130C001A**
	130	(5 1/8)		400	11	(71)	Stock	**KEBG0130C002A**
	130	(5 1/8)	25	600	19	(123)	Stock	**KEBG0130D001A**
	130	(5 1/8)	25	800	26	(168)	Stock	**KEBG0130D002A**
	130	(5 1/8)	25	1000	32	(206)	Stock	**KEBG0130D003A**
	160	(6 5/16)	25	200	5	(32)	Stock	**KEBG0160D001A**
	160	(6 5/16)	25	500	12	(77)	Stock	**KEBG0160D002A**
	160	(6 5/16)	25	800	20	(129)	Stock	**KEBG0160D003A**
	160	(6 5/16)	25	1000	25	(161)	Stock	**KEBG0160D004A**
	160	(6 5/16)	25	1200	30	(194)	Stock	**KEBG0160D005A**
	200	(7 7/8)	25	300	6	(39)	Stock	**KEBG0200D001A**
	200	(7 7/8)	25	600	11	(71)	Stock	**KEBG0200D002A**
	200	(7 7/8)	25	1000	19	(123)	Stock	**KEBG0200D003A**
	200	(7 7/8)	25	1200	23	(148)	Stock	**KEBG0200D004A**
	200	(7 7/8)	25	1400	27	(174)	Stock	**KEBG0200D005A**
	250	(9 7/8)	25	400	6	(39)	Stock	**KEBG0250D001A**
	250	(9 7/8)	25	700	10	(65)	Stock	**KEBG0250D002A**
	250	(9 7/8)	25	1000	15	(97)	Stock	**KEBG0250D003A**
	250	(9 7/8)	25	1400	20	(129)	Stock	**KEBG0250D004A**
	300	(11 13/16)	30	500	6	(39)	Stock	**KEBG0300D004A**
	300	(11 13/16)	30	1000	12	(77)	Stock	**KEBG0300D002A**
	300	(11 13/16)	30	1500	18	(116)	Stock	**KEBG0300D003A**
12.5	80	(3 1/8)		150	6	(39)	Stock	**KEBJ0080C001A**
	80	(3 1/8)		300	12	(77)	Stock	**KEBJ0080C003A**
	80	(3 1/8)		400	15	(97)	Stock	**KEBJ0080C004A**
	80	(3 1/8)		500	19	(123)	Stock	**KEBJ0080C002A**
	80	(3 1/8)		700	27	(174)	Stock	**KEBJ0080C005A**
	100	(3 15/16)		200	6	(39)	Stock	**KEBJ0100C001A**
	100	(3 15/16)		400	12	(77)	Stock	**KEBJ0100C002A**
	100	(3 15/16)		600	18	(116)	Stock	**KEBJ0100D003A**
	100	(3 15/16)		800	24	(155)	Stock	**KEBJ0100D004A**
	100	(3 15/16)	25	1000	37	(239)	Stock	**KEBJ0100D001A**
	130	(5 1/8)		250	5	(32)	Stock	**KEBJ0130C001A**
	130	(5 1/8)		500	11	(71)	Stock	**KEBJ0130C002A**
	130	(5 1/8)	25	800	21	(135)	Stock	**KEBJ0130D001A**
	130	(5 1/8)	25	1000	26	(168)	Stock	**KEBJ0130D002A**
	130	(5 1/8)	25	1400	36	(232)	Stock	**KEBJ0130D003A**
	160	(6 5/16)	25	300	6	(39)	Stock	**KEBJ0160D001A**
	160	(6 5/16)	25	600	12	(77)	Stock	**KEBJ0160D002A**
	160	(6 5/16)	25	1000	20	(129)	Stock	**KEBJ0160D003A**
	160	(6 5/16)	25	1400	28	(181)	Stock	**KEBJ0160D004A**
	160	(6 5/16)	25	1700	34	(219)	Stock	**KEBJ0160D005A**
	200	(7 7/8)	25	400	6	(39)	Stock	**KEBJ0200D002A**
	200	(7 7/8)	25	700	11	(71)	Stock	**KEBJ0200D003A**
	200	(7 7/8)	25	1000	15	(97)	Stock	**KEBJ0200D004A**
	200	(7 7/8)	25	1500	23	(148)	Stock	**KEBJ0200D005A**
	200	(7 7/8)	25	2000	30	(194)	Stock	**KEBJ0200D006A**
	250	(9 7/8)	25	500	6	(39)	Stock	**KEBJ0250D001A**
	250	(9 7/8)	25	1000	12	(77)	Stock	**KEBJ0250D002A**
	250	(9 7/8)	25	1500	18	(116)	Stock	**KEBJ0250D003A**
	250	(9 7/8)	25	2000	23	(148)	Stock	**KEBJ0250D004A**
	300	(11 13/16)	30	600	6	(39)	Stock	**KEBJ0300D001A**
	300	(11 13/16)	30	1500	15	(97)	Stock	**KEBJ0300D002A**
16.0	80	(3 1/8)		200	6	(39)	Stock	**KEBL0080C001A**
	80	(3 1/8)		400	12	(77)	Stock	**KEBL0080C002A**
	80	(3 1/8)		600	18	(116)	Stock	**KEBL0080C003A**
	80	(3 1/8)		800	24	(155)	Stock	**KEBL0080C004A**
	100	(3 15/16)		300	7	(45)	Stock	**KEBL0100C001A**
	100	(3 15/16)		500	12	(77)	Stock	**KEBL0100C002A**
	100	(3 15/16)		700	16	(103)	Stock	**KEBL0100C003A**
	100	(3 15/16)	25	1000	29	(187)	Stock	**KEBL0100D001A**

CONTINUED

Note: All stock EB cartridge heaters 230V~(ac) and 1000 mm fiberglass insulated swaged-in leads.

Metric EB Cartridge

Diameter mm	Sheath Length mm	(inches)	No-Heat Length mm	Watts	Watt Density W/cm²	(W/in²)	Availability	Code No.
16.0	130	(5 1/8)	25	400	8	(52)	Stock	**KEBL0130D001A**
	130	(5 1/8)	25	600	12	(77)	Stock	**KEBL0130D002A**
	130	(5 1/8)	25	800	16	(103)	Stock	**KEBL0130D003A**
	130	(5 1/8)	25	1200	24	(155)	Stock	**KEBL0130D004A**
	160	(6 5/16)	25	500	8	(52)	Stock	**KEBL0160D001A**
	160	(6 5/16)	25	700	11	(71)	Stock	**KEBL0160D002A**
	160	(6 5/16)	25	1000	16	(103)	Stock	**KEBL0160D003A**
	160	(6 5/16)	25	1500	23	(148)	Stock	**KEBL0160D004A**
	160	(6 5/16)	25	2000	31	(200)	Stock	**KEBL0160D005A**
	200	(7 7/8)	25	600	7	(45)	Stock	**KEBL0200D001A**
	200	(7 7/8)	25	1000	12	(77)	Stock	**KEBL0200D002A**
	200	(7 7/8)	25	1500	18	(116)	Stock	**KEBL0200D003A**
	200	(7 7/8)	25	2000	24	(155)	Stock	**KEBL0200D004A**
	250	(9 7/8)	25	700	6	(39)	Stock	**KEBL0250D001A**
	250	(9 7/8)	25	1500	14	(90)	Stock	**KEBL0250D002A**
	250	(9 7/8)	25	2000	18	(116)	Stock	**KEBL0250D003A**
	300	(11 13/16)	30	1000	8	(52)	Stock	**KEBL0300D001A**
	300	(11 13/16)	30	1500	11	(71)	Stock	**KEBL0300D002A**
	300	(11 13/16)	30	2000	15	(97)	Stock	**KEBL0300D003A**
20.0	200	(7 7/8)	25	1000	9	(58)	Stock	**KEBN0200D001A**
	200	(7 7/8)	25	1500	14	(90)	Stock	**KEBN0200D002A**
	200	(7 7/8)	25	2000	19	(123)	Stock	**KEBN0200D003A**
	300	(11 13/16)	30	1000	6	(39)	Stock	**KEBN0300D001A**
	300	(11 13/16)	30	1500	9	(58)	Stock	**KEBN0300D002A**
	300	(11 13/16)	30	2500	15	(97)	Stock	**KEBN0300D003A**
	400	(15 3/4)	40	1000	5	(32)	Stock	**KEBN0400D001A**
	400	(15 3/4)	40	2500	11	(71)	Stock	**KEBN0400D002A**
	400	(15 3/4)	40	4000	18	(116)	Stock	**KEBN0400D003A**
	500	(19 11/16)	50	1000	4	(26)	Stock	**KEBN0500D001A**
	500	(19 11/16)	50	2500	9	(58)	Stock	**KEBN0500D002A**
	500	(19 11/16)	50	4000	14	(90)	Stock	**KEBN0500D003A**

Note: All stock EB cartridge heaters 230V~(ac) and 1000 mm fiberglass insulated swaged-in leads.

Cast-In Heaters

The Heated Part Concept

Watlow's heated part concept can help simplify many complex heating problems.

The heated part is much more than a heater ... it is a functional component of equipment that can be designed in the exact shape and size needed. The heated part from Watlow is available two ways: as a one-piece cast-in aluminum heater assembly, or as an interference fit (IFC) design.

Utilizing Watlow's heated part can alleviate time-consuming tasks such as purchasing, assembly or machining of parts. Customers can concentrate on meeting the other manufacturing challenges.

The heated part consists of a formed cable or tubular heater cast into aluminum. For high temperature applications, Watlow offers an interference fit into other material such as stainless steel. The part is then customized to meet specific application needs including machining, termination, coatings and assembly.

From state-of-the-art CNC machines to the high tech research lab, Watlow invested in the technology necessary to develop high quality custom heat solutions.

Watlow's heated parts are manufactured by Watlow's ISO 9001 registered facility in Batavia, Illinois.

Performance Capabilities

- Operating temperatures: up to 752°F (400°C) with 319 or 356 aluminum
- Operating temperatures: up to 842°F (450°C) with 99.7 pure aluminum
- Operating temperatures: up to min. 1112°F (600°C) with stainless steel (IFC) designs

UL® is a registered trademark of Underwriter's Laboratories, Inc.

Features and Benefits

- **Watlow's complete foundry capabilities** assure precise and uniform placement of the element in the casting.
- **UL® component recognition** on cast-in heaters is available exclusively from Watlow.
- **ISO 9001** registration at Watlow's Batavia, Illinois, manufacturing plant assures quality management control from product design through production and servicing.
- **Patented pressure-casting system** produces castings with low porosity for better heat transfer. The system also minimizes internal voids and defects by precisely controlling molten metal temperature and feed rate.
- **Optional cast-in tubing** provides faster cooling or can be used to heat liquids or gases that run through it, functioning as a circulation heater.
- **High thermal conductivity** of aluminum provides extremely uniform surface temperatures to avoid damaging hot or cold spots when operating the heaters.
- **Reusable molds** are economical and provide excellent part-to-part uniformity.

Cast-In Heaters

The Heated Part Concept

Benefits

- Strong engineering support from concept through production
- Extremely tight tolerances
- Thorough documentation on request
- Quick prototypes
- Superb temperature uniformity due to optimum heater layouts and precision mold design
- Long life
- Single piece construction, eliminating need to assemble several components

Applications and Technical Data

Capabilities include:

- CAD/CAM design
- CNC equipment for precision machining and repeatable results from one order to the next
- Metallurgical expertise in foundry practice as well as machining technology
- Lapping machines for smooth finishes and extremely flat surfaces
- CMM (coordinate measuring machines) for in-process and final inspection with printed reports
- Assembly and termination options
- Services such as FEA (finite element analysis)
- Special coatings including Teflon® anodizing and electroless nickel plating
- X-ray techniques to check for porosity-free castings and proper heater location
- Additional treatment of the heated part such as chemical cleaning, and packaging for cleanroom acceptance
- Specially-designed packaging
- MRP scheduling and planning of your deliveries to meet your needs in a timely manner

R&D Efforts

To remain at the forefront of technological advancements in the industry, Watlow's heated part facility features a full lab in which extensive product and process research is conducted. One recent example of our R&D efforts has been the development of casting methods and an alloy to match the stringent contamination requirements of the semiconductor industry. Watlow now offers a 99.7 percent pure aluminum alloy with the same porosity-free characteristics of the more typical casting alloys.

On-going laboratory tests at the heated part facility include

- Temperature uniformity
- Heating and cooling ramp rates
- Structural characteristics
- Coating performance

Watlow has created heated parts for a variety of industries including

- Semiconductor
- Medical
- Glue melt
- Foodservice

How to Order

All cast-in heaters are **made-to-order**. Please have the following information available when placing an order or requesting a quote:

- Wattage: (see either the WATROD tubular section, **page 273** or Cable heater section, **page 57**, for engineering information)
- Voltage: Maximum is 550V~(ac)
- Part design: Provide two drawings with all dimensions and critical tolerances
- Heater exit locations
- Electrical termination: Standard threaded studs will be supplied unless other hardware is specified
- Quantity

Availability

Consult Watlow for design and manufacturing time required.

Teflon® is a registered trademark of E. I. du Pont de Nemours & Company.

Cast-In Heaters

The Heated Part Concept

Standard Aluminum Pedestal Heater

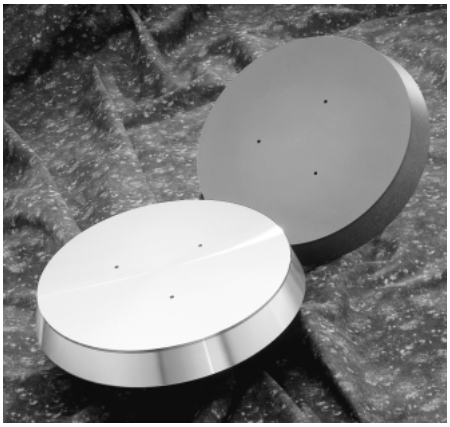

Watlow now has 200 mm aluminum pedestal heaters in stock to quickly solve wafer fabrication needs. Customers can now save thousands of dollars with off-the-shelf designs since there are no additional costs for engineering, tooling or mold creation. Watlow's pedestal heater design is ideal for prototype machine trials or engineering experiments as well as temporary repairs until custom heaters can be manufactured.

Watlow's pedestal heaters provide a complete turnkey solution available in anodized or bare 356 aluminum with optional add-on features.

The stock anodized cast aluminum pedestal heaters are complete, ready-to-install parts and are available for same day shipment. The bare special configured model can be customized from a list of options and is available with one to two week delivery depending on options selected.

Features and Benefits

- **Overnight delivery from stock** reduces downtime and assures a cost effective option for 200 mm wafer processing.
- **Operating temperatures up to 752°F (400°C)** provide world class performance.
- **Temperature uniformity** ±1.8°F (±1.0°C) at 302°F (150°C) enhances heat transfer.

Applications

- Semiconductor processing

Specifications

Model WR200-1A (Anodized)

- Material: A356 aluminum alloy
- Diameter: 8.93 in (226.8 mm)
- Thickness: 1.25 in (31.75 mm)
- Surface flatness: <0.0005 in (0.0127 mm)
- 3 lift pin holes 0.125 in (31.75 mm) dia. @ 120° on 3.25 in (82.55 mm) dia. bolt circle
- 1 thermocouple hole 0.063 in (1.6002 mm) dia.
- 1285W, 208V center exit (1711W/ 240V max.)
- Temperature uniformity: ±1° @ 150°C
- Hard anodize thickness: 0.0015 in (0.0381 mm) per MIL-A-8625, Type III, Class 1
- Cleaning: IPA wipe down

Model WR200-1B (Bare)

- Material: A356 aluminum alloy
- Diameter: 8.93 in (226.8 mm)
- Thickness: 1.25 in (31.75 mm)
- Surface flatness: <0.0005 in (0.0127 mm)
- 1285W, 208V center exit (1711W/ 240V max.)
- Temperature uniformity: ±1° @ 150°C
- Cleaning: IPA wipe down

Options (available for model WR200-1B)

- 3 proximity pins 0.006 in (0.1524 mm) high
- 3 lift pin holes 0.125 in (31.75 mm) dia. @ 120°
- 1 thermocouple hole 0.063 in (1.6002 mm) dia.
- Hard anodize thickness: 0.0015 in (0.0381 mm) per MIL-A-8625, Type III, Class 1
- Precision cleaning: backfill N_2
- Contact your local Watlow sales engineer or the factory to discuss any special options that may be required.

Standard Design

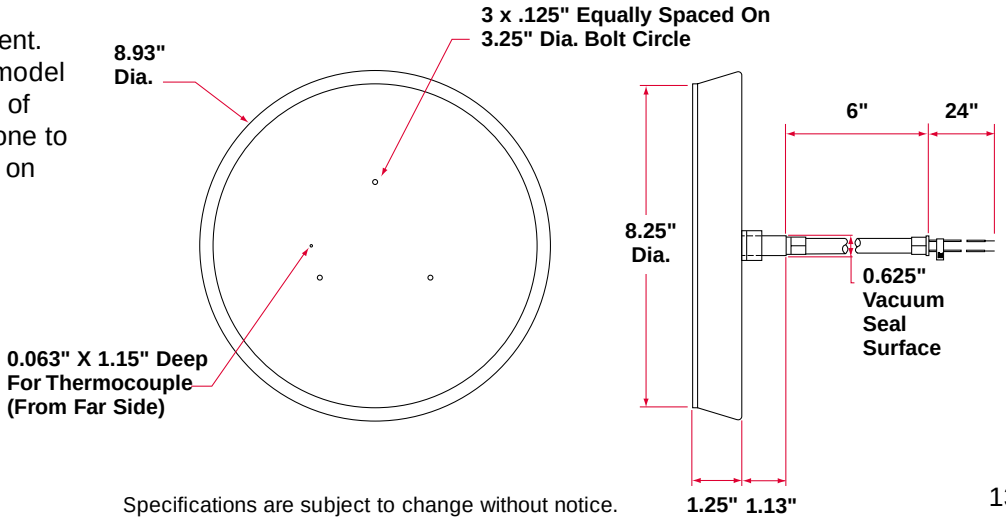

Cast-In Heaters

The Heated Part Concept

Pure Aluminum Heated Parts

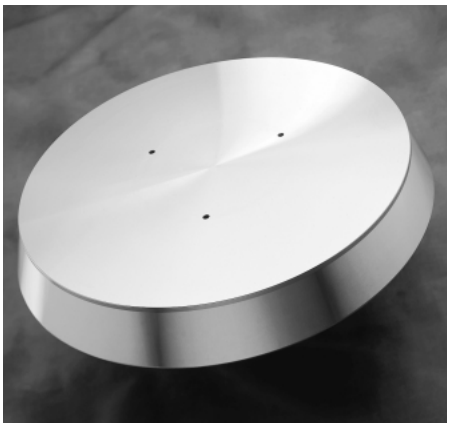

The need for maintaining an ultra pure environment has lead to the development of pure aluminum cast-in heated parts. Watlow now has the capability to cast complex heated shapes in 99.7 percent pure aluminum that limits process contamination and offers increased operating temperatures up to 842°F (450°C).

Pure aluminum cast-in heated parts provide higher maximum operating temperatures over the more typical aluminum casting alloys. This equates to a 25 percent increase in process temperatures, resulting in an additional 194-266°F (90-130°C) operating range. Thermal conductivity is also improved more than A356 alloy.

Designed and engineered to customer specifications, Watlow's low-pressure casting technique and CNC machining ensure consistent quality heated parts. Many types of tubing can be cast-in to produce a circulation heater or add cooling capability for heat/cool applications.

With a modern and innovative aluminum foundry on site, and over 75 years of experience in manufacturing heaters, Watlow has refined the technique to allow pure aluminum alloys to be cast with the same precision as more typical aluminum alloys.

Watlow's custom designs are backed by strong engineering support, expert heater knowledge, metallurgical expertise in foundry practice and precision machining using CAD/CAM/CAE and CNC manufacturing techniques.

Features and Benefits

- **99.7% pure aluminum** allows for increased operating temperatures while reducing the risk of process contamination.
- **Low porosity** provides longer heater life, improved temperature uniformity and fewer defects in machined surfaces.
- **Excellent temperature uniformity** provides better process yields.

Applications

- Semiconductor processing

Properties and Characteristics of Aluminum Alloys

AA#	Thermal Properties				Mechanical Properties			
	Solidus Temperature		Thermal Conductivity		Tensile		Yield	
	°C	(°F)	W/m-K	(BTU/ft*h*°F)	MPa	(ksi)	MPa	(ksi)
Casting Alloys								
319	515	(960)	109	(63)	235	(34)	130	(19)
356	555	(1035)	159	(92)	207	(30)	165	(24)
170.1	646	(1195)	234	(135)	76	(11)	28	(4)
Wrought Alloys								
1100	643	(1190)	222	(128)	90	(13)	34	(5)
5052	607	(1125)	91	(110)	193	(28)	90	(13)
5086	585	(1085)	127	(73.4)	60	(38)	115	(17)
6061	582	(1080)	180	(104)	310	(45)	276	(40)

Chemical Compositions Comparisons of Common Aluminum Alloys (maximum limits)

AA#	Si	Fe	Cu	Mn	Mg	Cr	Ni	Zn	Sn	Ti	Other	% Al
Casting Alloys												
319	6.50	1.00	4.00	0.50	0.01	-	0.35	1.00	-	0.25	0.50	85.9
356	7.50	0.60	0.25	0.35	0.45	-	-	0.35	-	0.25	0.15	90.1
170.1	0.05	0.09	0.07	-	0.01	-	-	-	-	0.03	0.10	99.7
Wrought Alloys												
1100	1.0	-	0.05/0.20	0.05	-	-	-	0.10	-	-	0.15	99.0
5052	0.25	0.40	0.10	0.10	2.2/2.8	0.15/0.35	-	0.10	-	-	0.15	96.2
5086	0.40	0.50	-	0.2/0.7	3.5/4.5	-	-	0.25	-	0.15	0.15	94.1
6061	0.4/0.8	0.70	0.15/0.4	0.15	0.8/1.2	0.04/0.35	-	0.25	-	0.15	0.15	96.5

Cast-In Heaters

The Heated Part Concept

IFC Heated Parts

Watlow's new IFC (Interference Fit Construction) heated parts are ideal for applications that require materials other than aluminum or exceed the temperature capabilities of cast aluminum. With FEA (Finite Element Analysis), or if time permits, by an iterative prototyping process, uniformity levels equaling ±1 percent of the operating temperature have been achieved. IFC heated parts use the same design logic as cast-in heaters to achieve temperature uniformity. Some important aspects that determine temperature uniformity performance are the material used, the physical shape of the part, the heater placement within the part, and the special shaped groove that is machined into the part to accept a cable or tubular heater. IFC allows the heated part to be customized to meet many specific customer needs over a wide variety of shapes and sizes.

In the past when temperature requirements have exceeded 842°F (450°C), engineers turned to milled groove or brazed assemblies. One of the advantages of the IFC heated part over the milled groove approach or the brazed assembly, is the improved heater life due to the intimate contact of the heater, therefore reducing hot spots. To optimize temperature uniformity and to eliminate the time-consuming iterative prototyping process Watlow offers FEA, which will optimize the design and allow an accurate prediction of the temperature uniformity that can be expected for a specific part.

IFC heated parts may be customized to meet specific customer needs including a multitude of machined shapes, terminations and coating, plus special cleaning. Since Watlow's IFC heated parts are a finished product, no assembly is required. All joints of the IFC heated part can be welded to make it vacuum-tight for use, even in the highest vacuum process levels. Watlow provides strong engineering support from concept through production, quick prototyping and wide range of design parameters.

Features and Benefits

- **Wide range of shapes and sizes** allows custom parts to meet specific customer needs.
- **Superior thermal transfer between heater and substrate** provides excellent temperature uniformity and improved heater life.
- **Single piece construction** eliminates the need to assemble several components (no brazing required).
- **Vacuum compatible** for very low contamination (no outgassing).
- **High operating temperatures** greater than 842°F (450°C) (depending on materials used and flatness requirements, consult factory for details).

Applications

- Semiconductor processing

Available Materials

- Stainless steel
- Nickel
- Inconel®
- Aluminum
- Copper
- Bronze

Inconel® is a registered trademark of Special Metals Corporation.

The Heated Part Concept

IFC Heated Parts

Continued

IFC Performance Data

IFC heaters improve thermal performance of a heated part by optimizing thermal transfer from heater sheath to the substrate. Testing was performed on two identical platens, one with the heater installed with the IFC method and the other using a typical milled groove construction. The test demonstrated the delta that exists between the heater sheath temperature and the platen substrate temperature at different watt densities. Both heaters were powered simultaneously and allowed to ramp to the set point of 662°F (350°C) at 120 volts and then again to 932°F (500°C) at 220 volts. The delta value of the IFC was only 86-104°F (30-40°C) while the delta of the milled groove part concluded with +176°F (+80°C) at 20 W/in^2 (3.10 W/cm^2). This is even more significant at 67.5 W/in^2 (10.46 W/cm^2) with the IFC delta value at a 302-320°F (150-160°C) rating while at 518°F (+270°C) for the milled groove part. The graph to the right illustrates the test results.

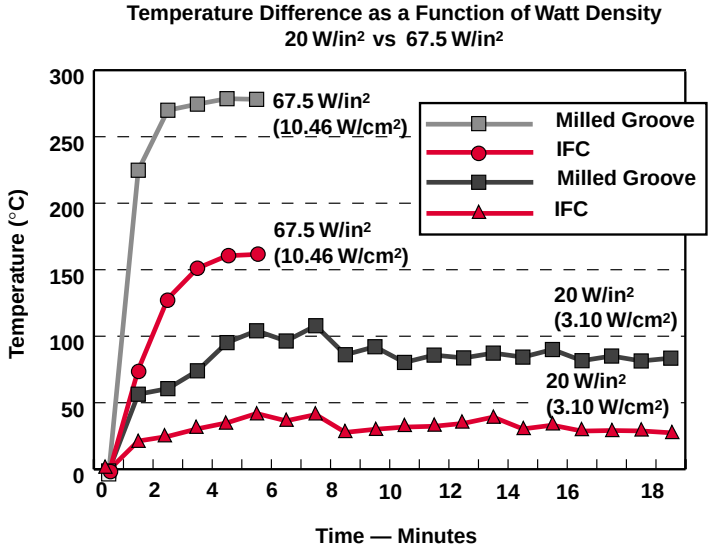

IFC Section View

IFC heaters have a proprietary-shaped groove machined into the part that accepts a tubular or cable heater. The heater is pressed into the groove and achieves heat transfer similar to that of a cast-in design. This method increases heater life when compared to the milled groove approach. The tight contact fit of heater within the machined groove reduces sheath hot spots that could result in heater burnout.

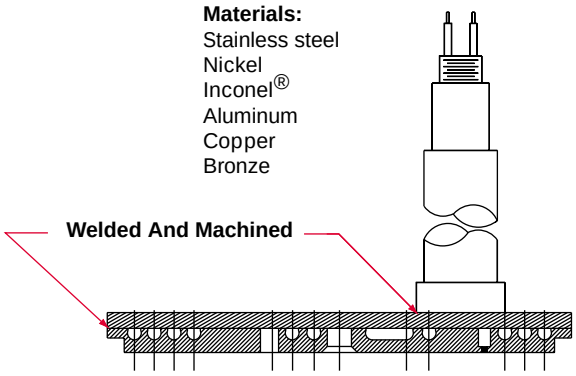

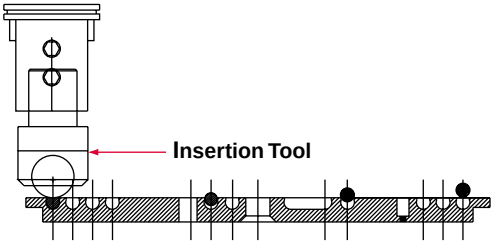

Quick Ship • *Same or next day shipment on all stock units.*

Ceramic Fiber Products

Ceramic Fiber Heaters

The ceramic fiber heater product line offers some of the highest temperature heating element capabilities in the Watlow family of heaters. Ceramic fiber heaters are made by integrating an iron-chrome-aluminum (ICA) heating element and ceramic fiber insulation for a new concept in application problem solving…"**heated insulation!**"

Heating units constructed of ceramic fiber insulation isolate the heating chamber from the outside. Ceramic fiber heaters are extremely low mass, high insulation value units with self-supported heating elements. Many applications can benefit from the convenience of the heating element and insulation combined into one package.

Ceramic fiber is an insulation made of an alumina-silica composition, held together by an inorganic binder. It's commonly used as a refractory material. Its lightweight, low-density properties make it ideally suited for high temperature applications requiring low thermal mass.

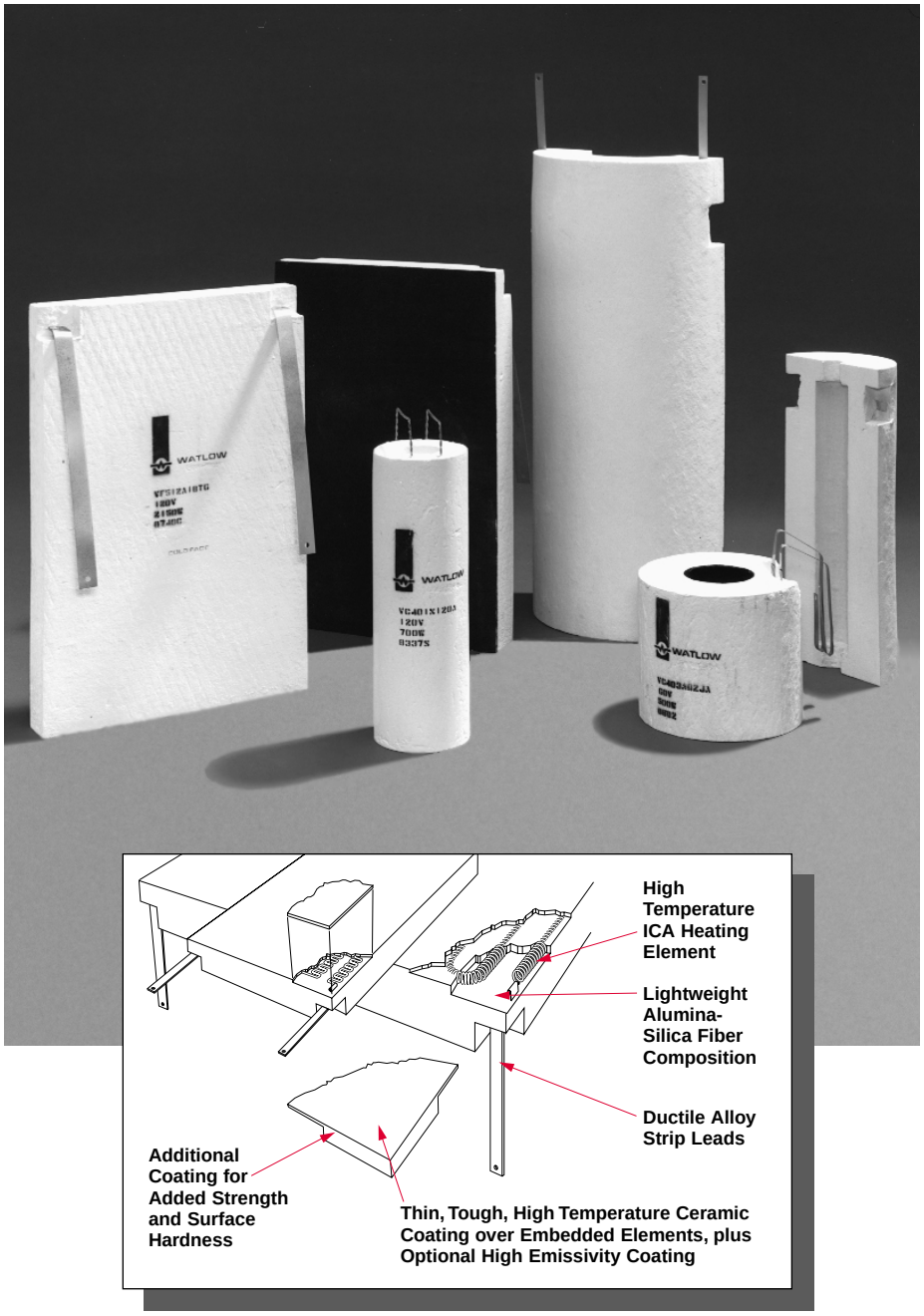

Performance Capabilities

- Operating temperatures up to 2200°F (1204°C) (See **page 143** for detailed limits.)
- Watt densities from 5 to 30 W/in^2 (0.8 to 4.6 W/cm^2)
- Uses "radiant" heat transfer exclusively

Features and Benefits

- **High temperature iron-chrome-aluminum (ICA) resistance elements** are integrally bound into position. Five element configurations are available for many applications.
- **Lightweight, low-density alumina-silica composition** is molded to shape, acting as insulation to isolate the heating chamber from the outside. This low shrinkage fiber and inorganic binder assures a firm, thermal shock resistant, self-supporting unit at all operating temperatures.
- **Operating temperatures up to 2200°F (1204°C)** provide high temperature performance not possible with many other heater types. (See **page 143** for detailed limits.)
- **Low mass ceramic fiber insulation of 10 to 15 lb/ft^3 (160 to 240 kg/m^3)** allows the heater to reach process temperature quickly and allows the energy to heat the load instead of wasting energy on itself.
- **Works directly off common power line voltages,** eliminating the need for expensive transformers or complex power control systems. Compatible with the full range of Watlow temperature controls and power switching devices.

Ceramic Fiber Heaters

Applications

- High temperature furnaces
- Metal melting, holding and transfer
- Semiconductor processing
- Glass, ceramic and wire processing
- Analytical instrumentation
- Fluidized beds
- Laboratory and R&D
- Other high temperature process applications

Embedded Coil Elements

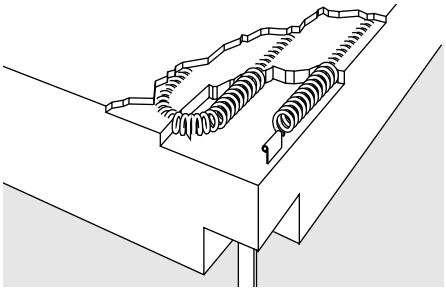

- Optimum performance for high temperature, enclosed furnace chambers.
- Coiled elements readily conform to complex curved surfaces, especially small custom chamber shapes.
- Coiled element design works best in higher voltage, lower current situations.
- Use where lower watt density requirements and low duty cycle operations are expected.
- Available in stock and standard units of medium watt density, rated up to 2000°F (1093°C). When ordering, refer to charts on **pages 154 to 157**.

Embedded Sinuated Elements

- Available in either flat or V-sinuated element configurations.
- Advanced V-sinuated element configuration allows up to 27 percent additional watt density over that of embedded flat sinuated elements.
- Performs best at medium to high temperatures at medium watt density power requirements.
- Use in partially enclosed to fully enclosed applications.
- Especially well suited for large, flat units; semi-cylindrical units above five inches (125 mm) I.D.; and full cylinders above four inches (100 mm) I.D.
- Offers greater effective insulation thickness than coiled element designs.
- Enhances “heated insulation” concept of operational use.
- Features high emissivity coating on new high watt density series units. When ordering, refer to charts on **pages 158 to 160**.

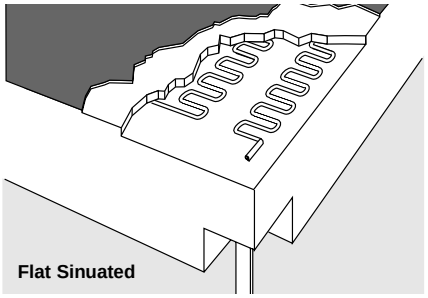

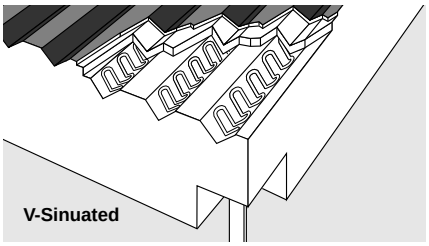

Exposed Sinuated Elements

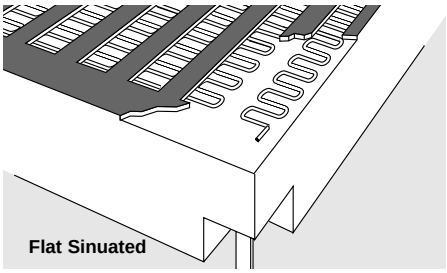

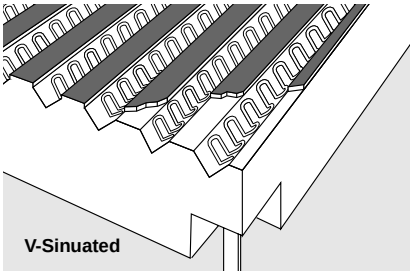

- Available in either flat or V-sinuated element configurations.
- Advanced V-sinuated element configuration allows up to 20 percent additional watt density over that of exposed flat sinuated elements.
- Offers the lowest possible wire-to-chamber temperature difference for maximum heater life.
- Provides the optimum heat-up/cool-down and recovery times as well as maximum efficiency of operation.
- Makes possible higher current handling capabilities.
- Minimizes the number of circuits and connections in large furnaces.
- Especially well suited for large, flat surface area units and large I.D. curved unit.
- Exposed elements are available on special order as a variation of the embedded sinuated element normally provided on stock and standard units. When ordering, refer to charts on **pages 158 to 160**.

Ceramic Fiber Products

Ceramic Fiber Heaters

Applications and Performance Data

Performance Capabilities

The following *Performance Envelopes* graph represents the capabilities of the five heater element configurations previously mentioned. The curves compare upper temperature limits versus permissible design watt densities to achieve a **standard heater life expectation of 2,000 hours**.

As with all Watlow heaters, the major application concern deals with the heater's surface watt density as it relates to the application temperature, such as the furnace chamber temperature or the radiant surface temperature. When evaluating an application for temperature and watt density requirements, it should fall to the left of, and below, the performance limit lines. If the application falls into this area, then it's in the **safe performance area.** The further into this safe performance area, the greater will be the life expectations of that heater. If an application requires temperatures or watt densities that fall into the area to the right of, and above, the lines, then the application is **beyond** the heater's typical design or performance limits. Using a heater required to perform in this area of the graph may result in shorter life expectancy. For information specific to an application, contact a Watlow sales engineer or authorized distributor.

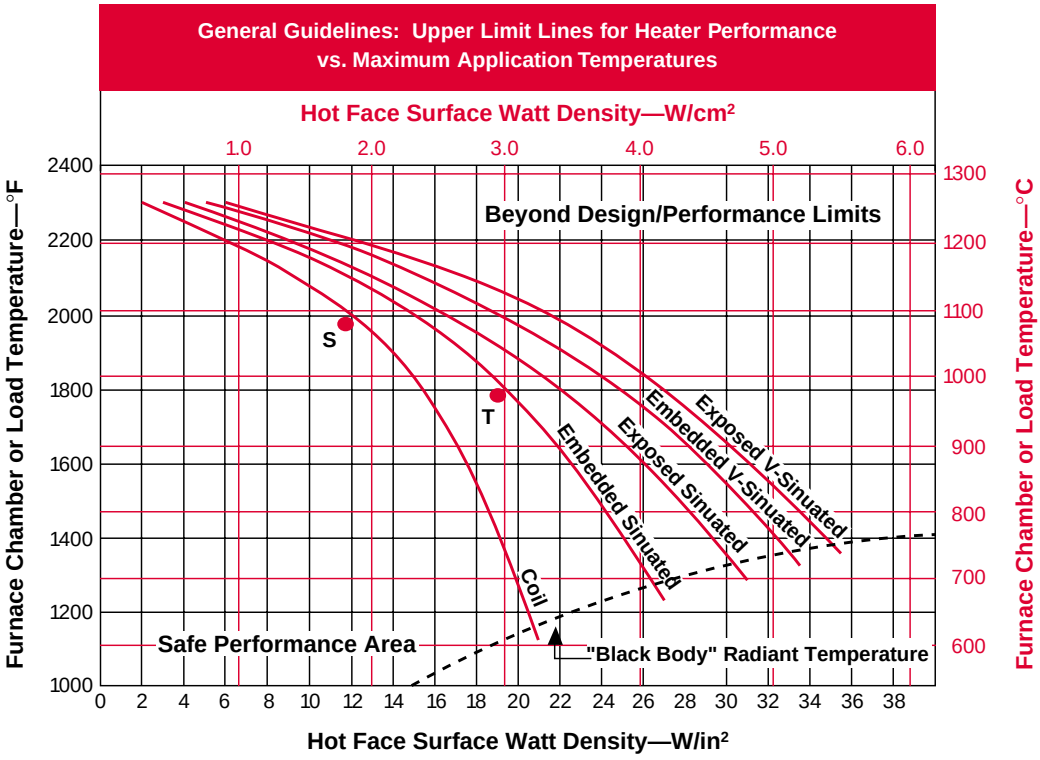

Ceramic Fiber Heaters

Applications and Performance Data

Continued

The following graphs provide technical data to help evaluate the performance and select the correct ceramic fiber heater for an application.

These four graphs represent performance data for heat-up/cool-down rates and power requirements to maintain furnace temperature. This data is the average of test results performed for two of the most typical types of furnace chambers, and should not be used for specification purposes.

Small, Full Cylinder, Heated Chambers

Test conditions for small, full cylinder heated chambers are typical of analytical instrumentation furnaces. Several stock sizes are represented. The units tested were six inches (150 mm) long, mounted in a vertical orientation. Both ends were capped with one inch (25 mm) of ceramic fiber insulation. No additional insulation or metal sheath was added to the outside diameter. The temperature was measured by a thermocouple located in the geometric center of the chamber.

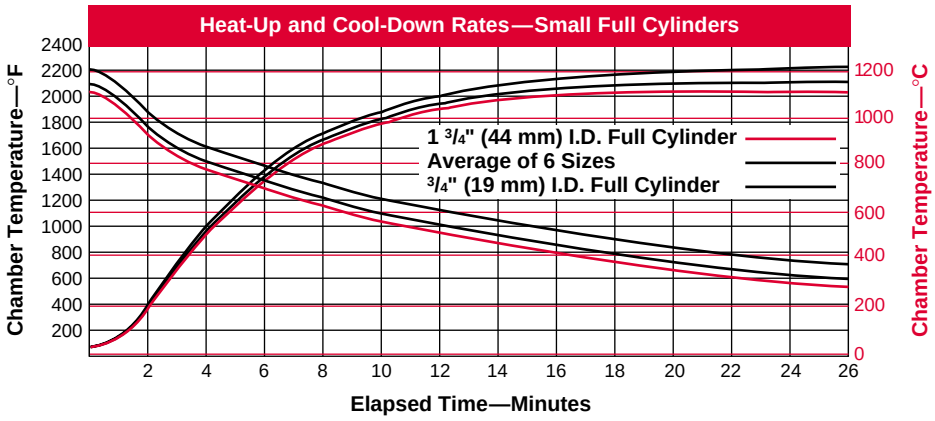

Power Requirements

Below are the percentages of rated power needed to achieve and hold specific temperatures inside the full cylinder chambers tested.

Thus this represents the efficiency of these heaters in this mounting configuration.

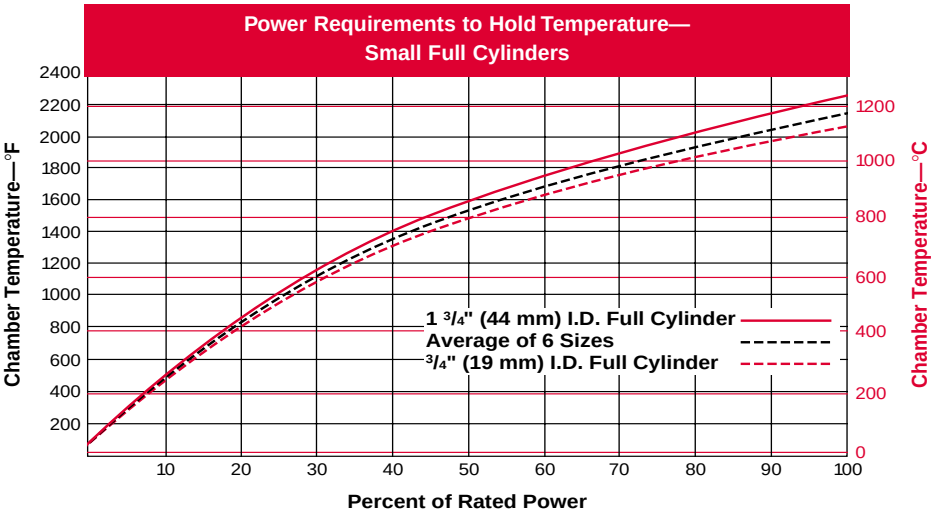

Ceramic Fiber Products

Ceramic Fiber Heaters

Applications and Performance Data

Continued

Medium Sized, Insulated Closed Chambers

Test conditions for medium sized, insulated chambers are typical of pit and box furnaces, large tube furnaces and pipe and reactor heating. Standard embedded coil units (Watlow code number VS412A12S) were used, rated for 2000°F (1093°C). The test chamber size was 12 inches long and 12 inches I.D. (305 X 305 mm). The volume was approximately 0.75 ft^3 (0.02 m^3).

Temperature heat-up rates were measured by thermocouples in three places: at the element, on the heater surface and at the center-of-chamber. Data for various additional wall thicknesses is also shown. This is typical of how large flat and semi-cylindrical units would be used. The chamber was oriented vertically with top and bottom disks of ceramic fiber insulation equal to wall thickness.

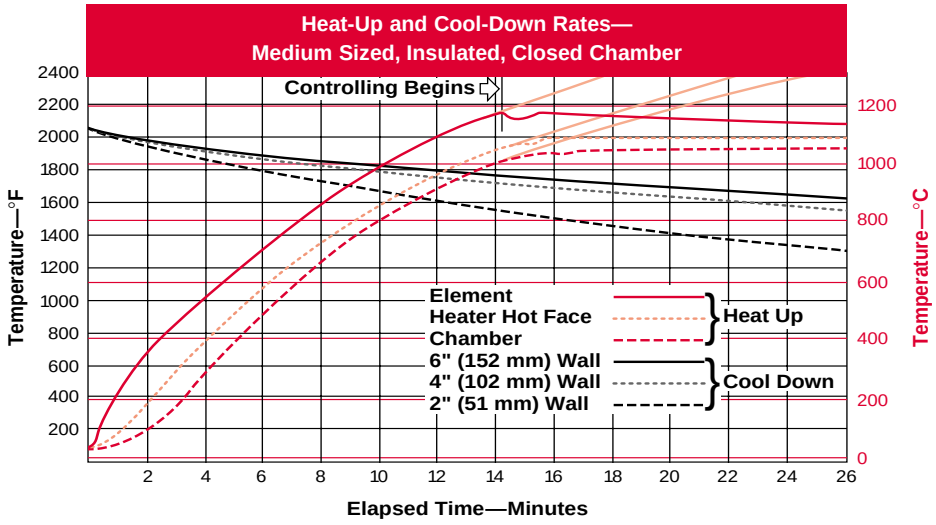

Power Requirements

Below are the percentages of rated power needed to achieve and hold specific temperatures inside medium sized, insulated chambers. Thus this represents the efficiency of these heaters in this mounting configuration.

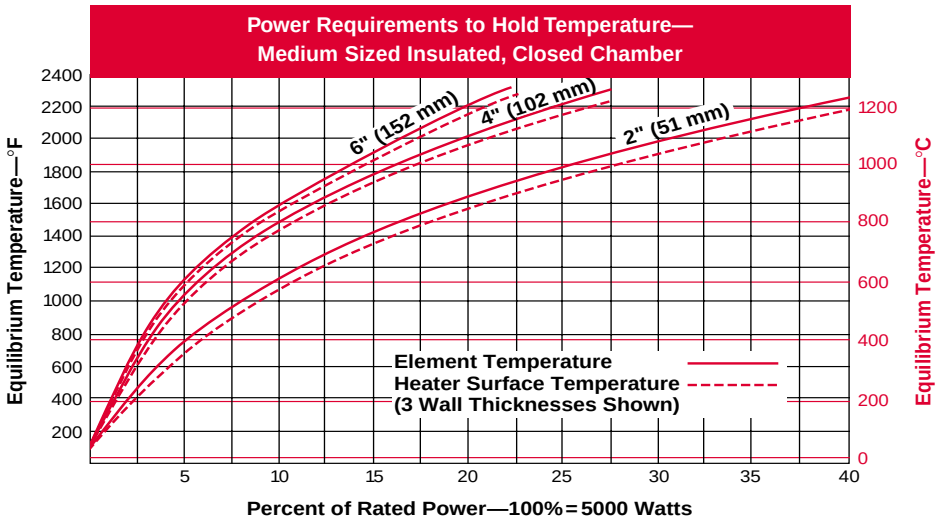

Ceramic Fiber Heaters

Applications and Performance Data

Continued

Insulation Effectiveness

The graphs below demonstrate the effectiveness of adding 6 lb/ft³ (96 kg/m³) blanket insulation to the backside of standard two inch (50 mm) thick ceramic fiber heaters. Total wall thickness of up to six inches (152 mm) is shown. Data is for vertical sides, without metal sheathing. Top and bottom surfaces, and surfaces with metal sheaths over the ceramic fiber insulation will be different.

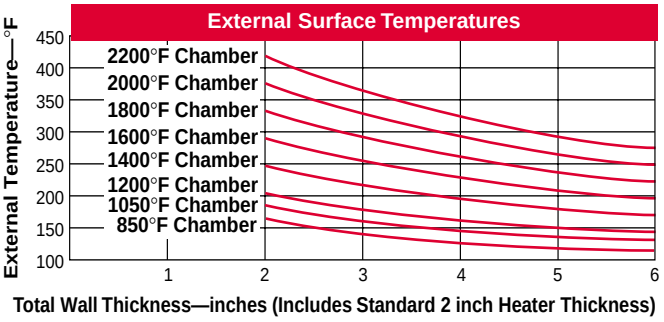

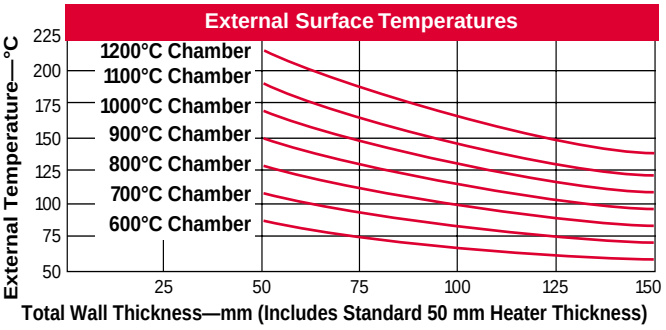

Heat Loss and Energy Transfer

For general calculations of heat loss and energy transfer, the *Insulation K-Factors* and *Emissivity* graphs are helpful.

The *K-Factors* graph is for ceramic fiber heaters and the ceramic fiber insulation blanket, which is typically used with the heaters. This blanket is offered as an accessory by Watlow.

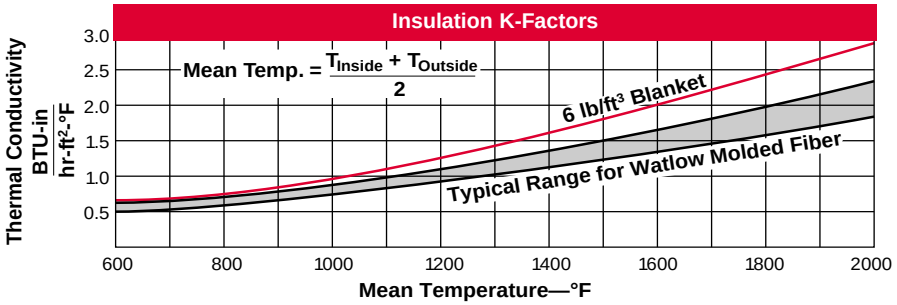

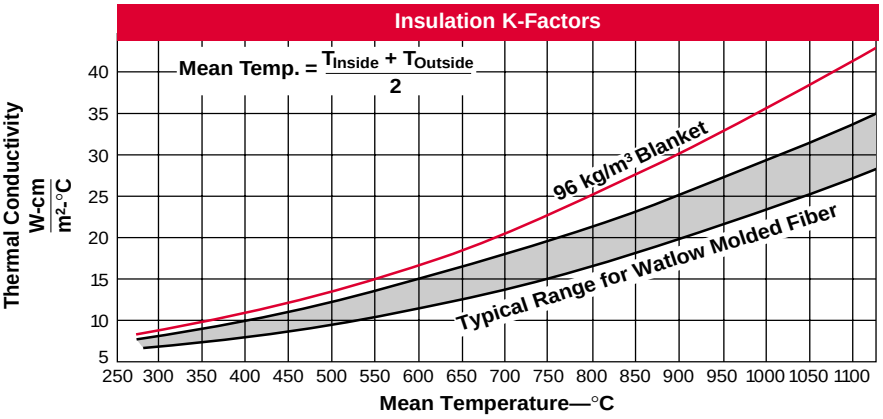

Application Hints

For wall thicknesses (T) in cylindrical situations use the "equivilant thickness" conversion.

$$T_{cyl.} = r_{out} \log_e \left(\frac{r_{out}}{r_{in}}\right)$$

Where r_{out} is outer radius
r_{in} is inner radius

Emissivity of Heater Surface

The emissivity graph details the normalized emittance values for the four surfaces most likely to be encountered when planning Watlow ceramic fiber heater applications.

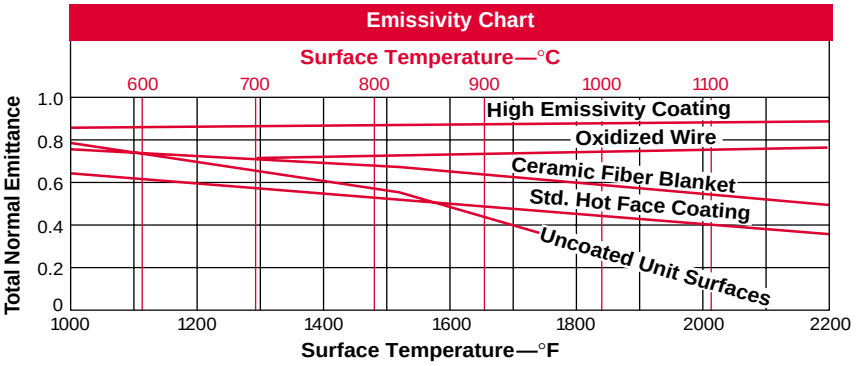

Ceramic Fiber Products

Ceramic Fiber Heaters

Mounting Methods

Warning

This product contains refractory ceramic fibers (RCF) which have been identified by the International Agency for Research on Cancer (IRAC) as a possible human carcinogen (class 2B).

Before using the products, read the MSDS which contains the detailed precautionary measures and handling instructions.

The Watlow ceramic fiber heater product line presents a wide range of heater shapes and configurations for solving high temperature process applications. The modularity and range of sizes and wattages provides the greatest possible flexibility when using these heaters. At the same time, this requires many different mounting solutions. Watlow has developed or can recommend many appropriate specific and generalized mounting systems for solving your mounting problem. Watlow has arranged the ceramic fiber heaters into seven major mounting categories or heater system configurations, shown in the following illustrations. The MODULE-MOUNT® system, due to its importance, is treated in the most detail on the following pages.

1. Full Cylinder Heaters

2. Semi-Cylindrical (180 degree section) Heaters

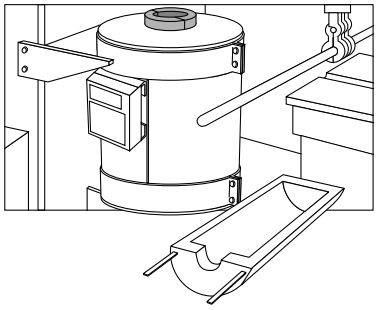

3. Arc-Section Arrays of Heaters (3 or more units of 120 degree or less each)

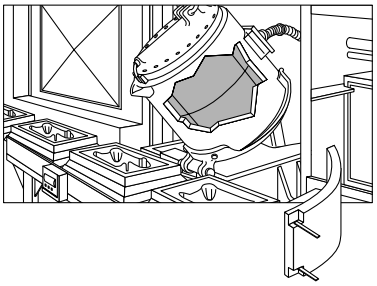

4. Flat Panels, with One Panel on Each Side

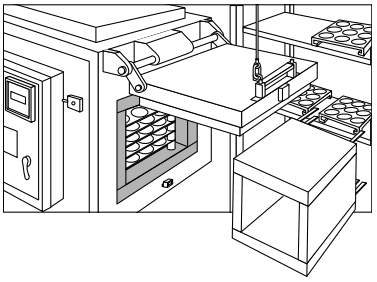

5. Flat Wall Array with Minimum Two-by-Two Units per Wall

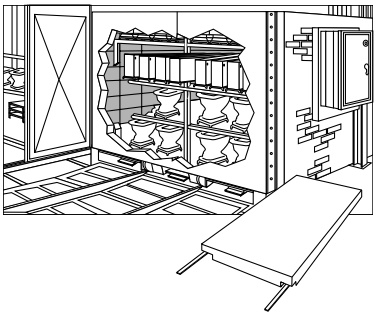

6. Made-to-Order Molded Shapes with up to Five Sides of a Box Molded as One Piece, Including Complex Curves

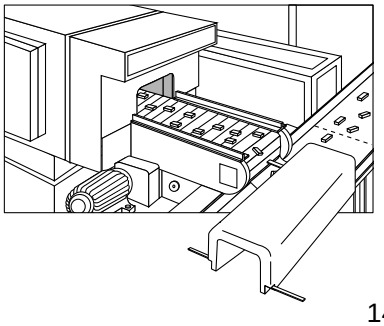

Ceramic Fiber Heaters

Mounting Methods

Continued

7. MODULE-MOUNT System

The Watlow MODULE-MOUNT system is more than a mounting method. It's a design solution that integrates ceramic fiber heaters with a shell for mounting on an optional steel "space-frame" structure.

Combining the heaters and mounting assembly in one unique package provides ease of installation—and makes the heater more accessible for maintenance—minimizing downtime.

Performance Capabilities

- Holds ceramic fiber heaters capable of operating up to 2200°F (1205°C)
- Watt densities up to 25 W/in^2 (4 W/cm^2)

Features and Benefits

- **"Hot change" feature** allows individual heater replacement without total system shutdown or disassembly.
- **"Spaceframe" structure** can be designed to hold from four to more than 18 heaters. Also accommodates heater sizes from as small as four to 12 inches (102-305 mm) wide and up to 48 inches (1220 mm) tall.
- **Design flexibility** is ideal for **flat and curved** wall heaters. The Spaceframe could be customized to hold any heaters that conform with size, shape and electrical rating limitations.
- **Operates off power line sources** from 120 to 600V~(ac), single or three phase. NEMA1 terminal boxes are provided as standard.

System Designs

The MODULE-MOUNT system examples presented here are for crucible and retort furnaces. Also represented here are floor and leg mounted configurations. Together this represents an overview of how the MODULE-MOUNT system can be used in several typical applications, such as aluminum crucible furnaces, retorts, vacuum tanks, fluidized beds, lead pots and more. The cross-sectional illustration is to help visualize the MODULE-MOUNT system concept.

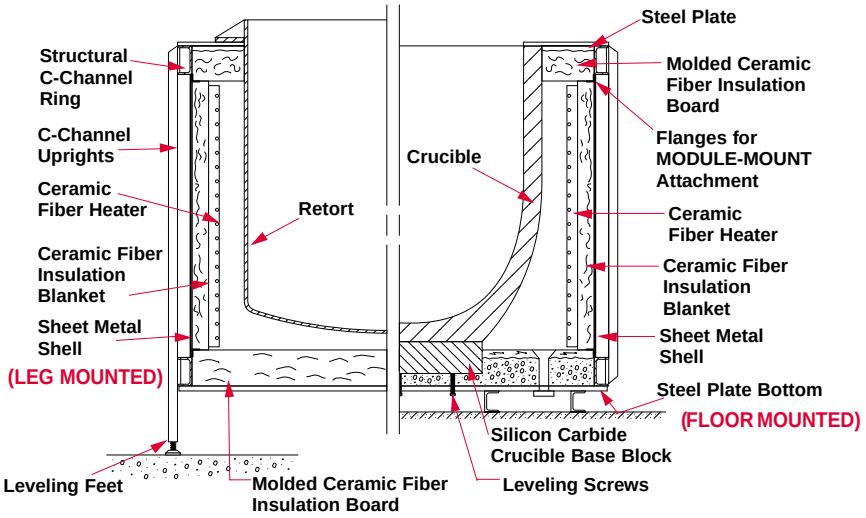

Ceramic Fiber Products

Ceramic Fiber Heaters

Mounting Methods

Continued

MODULE-MOUNT System

Construction Details

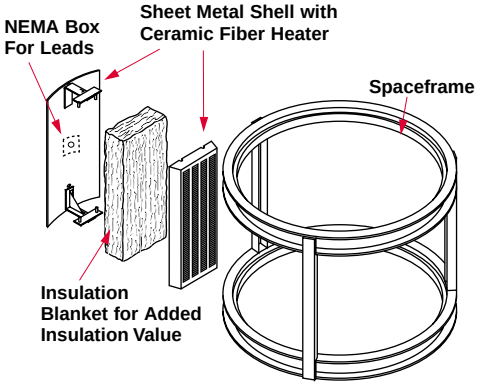

Flat and arc-section panels, used in one-by-multiple unit arrays. This is the MODULE-MOUNT system.

The MODULE-MOUNT system consists of four basic components: the ceramic fiber heater, additional insulation blanket and a sheet metal shell to hold the heater and insulation blanket. The Spaceframe would be made by the furnace builder to meet custom application design.

The back side of the ceramic fiber heater is slotted to accept cemented-in tubes for connecting the heater to the shell. The reusable shell can be made of the most appropriate sheet metal (aluminized steel is used as the standard) to meet operating environment conditions. Several layers of reusable ceramic fiber blanket are placed between the shell and heater, adding insulation value [typically the heater is two inches (51 mm) thick, with three inches (76 mm) of blanket].

Sizes and Specifications of Representative MODULE-MOUNT System Designs

The specification chart is to help understand the range of systems possible. Basic considerations include: total size, load to be heated, heater configuration and power requirements. The MODULE-MOUNT system is very flexible in terms of both range of sizes and the types of loads that can be heated. Since the number of heaters around an object could range from four to any number, MODULE-MOUNT heaters can be assembled to meet virtually any application. Typically, MODULE-MOUNT assemblies are divisible by three to accommodate three-phase power and, if necessary for vertical zoning, can be arranged in stacked vertical rings. The MODULE-MOUNT system concept can be applied to virtually any size object for which a suitable Spaceframe can be constructed. Since almost any size object can be accommodated, there are no available standard or stock sizes in the MODULE-MOUNT system. Instead, stock and standard ceramic fiber heaters are available to adapt for use in a MODULE-MOUNT system. Watlow can also provide made-to-order ceramic fiber heaters to meet exact application requirements.

Typical MODULE-MOUNT System Designs

The chart below lists the different specifications for typical applications of the MODULE-MOUNT heating system.

Load Type	Lead Pot		Fluidized Bed		Retort		Aluminum Crucible*		Aluminum Crucible*	
Load Weight lbs (kg)	1000	(455)	400	(180)	1100	(500)	620	(280)	2400	(1090)
Load Size Top O.D. in (mm)	14	(355)	22	(560)	28	(710)	28.25	(715)	40	(1015)
Load Size Height in (mm)	20	(510)	28	(710)	48	(1220)	22.75	(580)	27.5	(700)
Total System Power kW	16.0		38.7		60.0		46.8		84.0	
Number of Heaters	6		9		9		12		12	
Heater Array I.D. in (mm)	17	(430)	28	(710)	34	(865)	34	(865)	48	(1220)
Chamber Height in (mm)	20	(510)	26	(660)	46	(1170)	26	(660)	30	(760)
Heater Size Width in (mm)	9.75	(250)	10	(255)	12.5	(315)	8.9	(225)	12.6	(320)
Heater Size Height in (mm)	18	(455)	24	(610)	44	(1115)	23	(585)	27	(685)
Heater Rating Volts	139		240		277		139		277	
Heater Rating Watts	2667		4300		6675		3900		7000	

* Watlow also offers from stock non-MODULE-MOUNT flat sinuated element replacement heaters for aluminum crucible furnaces used in the non-ferrous foundry and die-casting market.

Ceramic Fiber Heaters

Termination Options

Watlow has many variations of electric leads to meet particular wiring requirements. To understand the termination options available, it's necessary to understand the different ways electrical leads can be applied.

Ceramic fiber heater electrical leads are welded to stubs – the metal parts that interface between the heating element wire and the add-on electrical leads. These stubs exit the heater at the lead pockets. Pockets are small cavities, below the cold face plane (outside surface) and generally located at or near the corners.

Watlow ceramic fiber heaters come with either strip leads or double twisted wire leads. Strip leads are the most commonly used, unless otherwise specified. The various lead styles refer to the lead's exit orientation, relative to the pocket used on a given type of heater. See illustrations for specific details.

Important

Inspect the carton and its contents for damage prior to discarding packaging material. If there is any damage, contact a Watlow Representative immediately for a Returned Material Authorization (RMA) number. All damaged goods are to be returned in the original packaging to reduce the possibility of further damage to the product.

Strip Leads

Flat and semi-cylindrical ceramic fiber heaters are available with the termination options shown here. When ordering termination options for stock units, the specific strip lead **Style** must be specified. To determine the desired style, refer to the following illustrations. Otherwise, **Style A** leads will be provided and the length will be 12 inches (305 mm). Additional lengths are possible using add-on leads which are priced per pair, per inch, for the three different widths. See ordering charts for which lead width is used on a specific heater.

Strip leads are shipped with a 13⁄64 inch (5 mm) hole at the end of the lead. Use #10-24 screws, nuts and washers, or other wiring connections. Caution should be exercised when making connections. Leads are susceptible to loosening due to thermal expansion and contraction as the heater cycles.

Flat Units

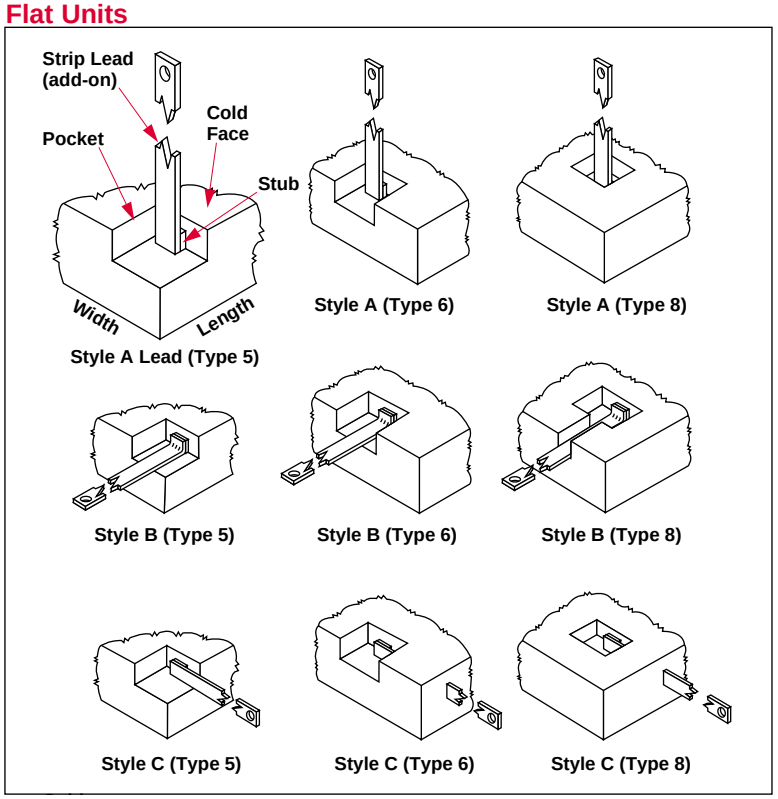

Semi-cylindrical Units

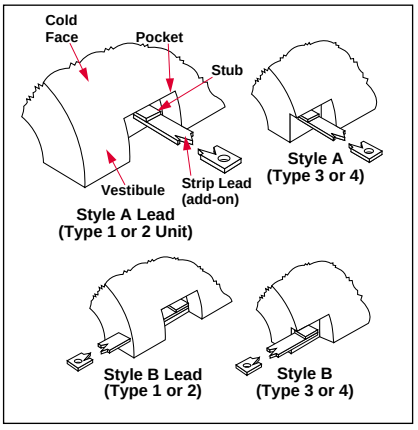

Ceramic Fiber Products

Ceramic Fiber Heaters

Termination Options

Continued

Special Lead Orientation

If the various standard strip lead orientations and pocket configurations are not suitable, special designs are possible. When ordering, please include drawings that show proposed locations.

Leads Bent 90 Degrees

The double twisted leads of full cylinder heaters can be bent 90 degrees to lay into slots and exit to the sides of the unit.

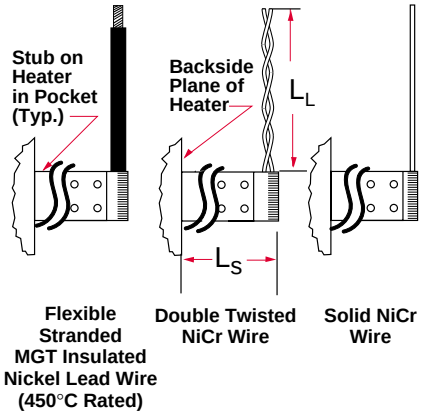

$L_{Total} = L_S + L_L$

Special Add-On Lead Configurations

The three termination options illustrated can be welded onto the stub at the heater pocket, or better, welded on at the end of a specified length of the regular strip lead. L_S is the *Strip* lead length, which can vary from zero to the value necessary to get away from the hot zone. L_L is the length of the add-on lead. This additional add-on lead option makes it possible to use stock/standard units to satisfy a greater range of wiring requirements. Consult a Watlow sales engineer or authorized distributor for technical details and price.

Accessories

Ceramic fiber heater orders can also include the following accessory items, as detailed on this and following pages. Please specify the Watlow code number when ordering.

Rigidizer

Rigidizer is primarily used to recoat soft, cut edges of ceramic fiber heaters and ceramic fiber insulation panels. Various degrees of hardening can be achieved with additional applications. Rigidizer can be ordered by the pint (0.47 L) by specifying code number **CFRGD (PT)** or gallon (3.78 L), code number **CFRGD (GAL)**.

Ceramic Tubes

Ceramic tubes are available in four nominal sizes: ⅛, ¼, ⅜ and ½ inch I.D. and lengths of 0.9 inch (22 mm) and 1.9 inch (48 mm) long. Ceramic tubes have several uses, including thermocouple mounting holes, mounting pin sleeves and lead coverings. The table to the right lists code numbers and exact sizes.

B.T.E. Closed-End Thermocouple Tubes

Also available is a horizontal thermocouple tube betwwen the elements. Two sizes are available: 0.140 inch (3.6 mm) and 0.265 inch (6.7 mm), both six inches long (152 mm) with closed end.

Ceramic Tubes

Inside Diameter in (mm)		Length in (mm)		Code No.
0.140	(3.6)	0.9	(22)	**CC405-1**
0.265	(6.7)	0.9	(22)	**CC405-2**
0.390	(9.9)	0.74	(19)	**CC405-3**
0.515	(13.1)	0.9	(22)	**CC405-9**
0.140	(3.6)	1.9	(48)	**CC405-4**
0.265	(6.7)	1.9	(48)	**CC405-5**
0.390	(9.9)	1.6	(41)	**CC405-6**
0.515	(13.1)	1.9	(48)	**CC405-8**

Powdered Ceramic Fiber

Powdered ceramic fiber is used primarily to improve surface finish in critical areas. It can also be used to repair damaged units by filling voids, cracks and broken corners. Use powdered ceramic fiber with rigidizer to make an easily applied paste. Standard container is one pint (0.47 L). Order code number **CFPDRF (PT)**.

Dry Heating Surface Mix

Dry heating surface mix, which is used to make the hot face of all standard heaters, including those with the high emissivity coating, can also be used with rigidizer to make a very high temperature paste for touch ups of the hot face area. Order by the pint (0.47 L), code number **CFHTGSURMX**, or gallon (3.78 L), code number **CFHTGMX-GAL**.

High Temperature Coating and Electrical Potting Cement

Two different high purity, high temperature cements have multiple uses: mount thermocouple tubes, provide extra surface hardening, bond ceramic fiber gaskets and affix lightweight ceramic fiber insulation blanket to panels, as well as attach edge-spacer blocks and custom vestibules. Potting cement comes in a ¼ pint (116 ml) jar, and may be ordered by specifying code number **CFPTGCMT**.The high temperature coating cement is available in pints or gallons, and can be ordered by the code numbers **CFCTGCMT (PT)**, **CFCTGCMT (GAL)**.

Ceramic Fiber Heaters

Accessories

Continued

Ceramic Fiber Insulation Blanket

Additional insulation value for ceramic fiber heaters is available with ceramic fiber insulation blanket. This 6 lb/ft³ (96 kg/m³) ceramic fiber blanket contains no organic binders. Suitable for applications up to 2300°F (1260°C). Sold in full rolls or cut by the square foot, these blankets are available in the following sizes:

Size (U.S.)	Size (metric)	Code No.
24 in x 25 ft x ¼ in	610 mm x 7.6 m x 6 mm	**CFBLKT1/4***
24 in x 25 ft x ½ in	610 mm x 7.6 m x 13 mm	**CFBLKT1/2***
24 in x 25 ft x 1 in	610 mm x 7.6 m x 25 mm	**CFBLKT-1***

* Add ...R to end of Code No. for full roll.

Strip Lead Porcelain Bushings

Strip lead porcelain bushings are primarily used to protect heater power leads when passing through the metal walls and furnace structures. Bushings are available with inside diameters, listed below, for use with double twisted leads and the three standard strip lead widths. To select the appropriate inside diameter lead bushing, see the heater selection tables on **pages 154 through 160** The strip lead width for each heater is listed therein.

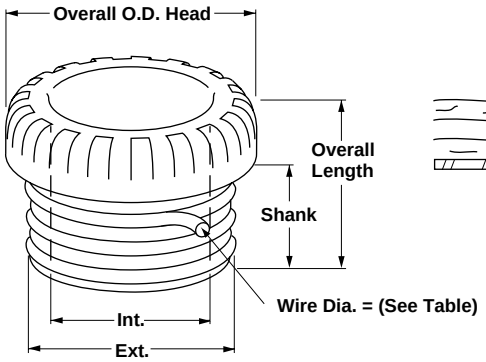

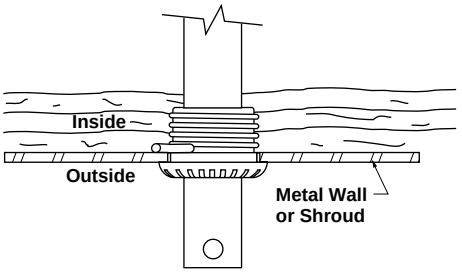

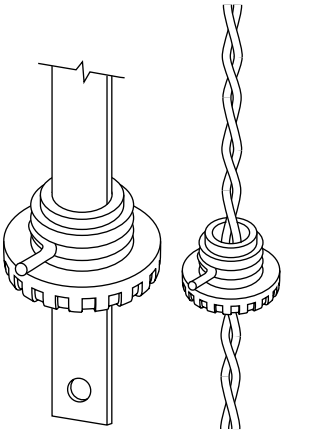

Porcelain Bushings Specifications

Conduit K.O. Size		Shank Dia. without Wire Nut Int.		Shank Dia. without Wire Nut Ext.		Wire Nut Dia.		Shank Length		Overall Length		Overall Head O.D. (Ref.)		Use With:	Code No.
in	(mm)	in	(mm)	in	(mm)	in	(mm)	in	(mm)	in	(mm)	in	(mm)		
⅜	(10)	⅜	(10)	21/32	(17)	0.080	(2.032)	9/16	(14)	⅞	(22)	⅞	(22)	All double twist	**CS45-11**
½	(13)	7/16	(11)	13/16	(21)	0.080	(2.032)	¾	(19)	1⅛	(29)	1⅛	(29)	⅜ (10 mm) Strip	**CS45-20**
¾	(19)	9/16	(14)	1	(25)	0.106	(2.692)	⅞	(22)	1 5/16	(33)	1 5/16	(33)	½ (13 mm) Strip	**CS45-30**
1	(25)	⅞	(22)	1 5/16	(33)	0.095	(2.413)	⅞	(22)	1¼	(32)	1 9/16	(40)	¾ (19 mm) Strip	**CS45-42**

Ceramic Fiber Products

Ceramic Fiber Heaters

Application Hints

- Never use ceramic fiber heaters for conduction heating applications. These heaters are designed for **radiant heat transfer only**.
- Use appropriate mounting methods such as pins, washers, clamping straps, overlapping edge clamps, interlocking edges, etc. Generally, these methods are better than cementing ceramic fiber heaters, because cementing will not accommodate the expansion and contraction caused by thermal cycling of the surrounding metal structures.
- Keep furnace loads free of oils, lubricants and other contaminants that can vaporize at high temperatures. Ceramic fiber heaters have a porosity exceeding 90 percent, and cannot be sealed against contamination infiltration and possible damage to the heating element wire.
- Use low mass thermocouples that are responsive to rapidly changing radiant energy transfer conditions. Without proper temperature control, ceramic fiber heaters can generate sufficient heat for self destruction.
- Mount thermocouple junction directly above an element and within 1/16 inch (1.6 mm) of the heated surface. Embedded ceramic mounting tubes are available as an option to position 0.125 inch (3.2 mm) diameter thermocouples inside the fiber, directly behind and between the elements. Heater wire operating temperatures are the critical factor, and should be monitored at the hottest point within the application.
- Electrical connections made in heated portions of the application must be rated for the appropriate currents and anticipated ambient temperatures. To ensure good electrical connections, use compression-type connection devices located as far away from the hottest area of the application. This minimizes the possibility of electrical connection degradation caused by thermal expansion and contraction and high temperature oxidation.
- Ceramic fiber products shrink at high temperatures. During the first 24 hours of operation at temperatures between 1600 and 2200°F (870 to 1204°C) shrinkage of up to four percent can occur. Fill all gaps between units created by shrinkage with loose ceramic fiber insulation. Watlow offers a “pre-firing” process that pre-shrinks and dimensionally stabilizes units before shipping. Consult the factory for further details.
- Use additional back-up insulation for maximum energy efficiency and appropriate safety considerations. Use only insulation with inorganic fibers and binders to avoid corrosive fumes that could damage heater elements.
- Handle all units and leads with care. Ceramic fiber heaters are very resistant to thermal cycling and thermal shock, but are easily subjected to mechanical damage from careless handling.
- Repair of minor mechanical damage, made with unapproved or unknown cements, could cause damage to the wire elements at high temperatures. If unsure, consult the factory before making any repairs. Several accessory items are available from the factory for repair purposes.

Ordering Hints

Ordering ceramic fiber heaters is easy. However, it’s very important to pay attention to code numbers and special modifications details.

- Always fill in the “..._...” (blank) code position with the correct Type number (see illustrations above the charts).
- Always provide the correct Lead Style letter. (See suggested illustrations above the charts, but remember, the Style A-12 will be the default lead if not otherwise specified.)
- Supply drawing or sketches whenever possible. These reduce confusion.
- When ordering Type 6, 7, 8 units, be certain of the heated area and no-heat area orientations desired.
- When planning to order the non-stocked Type 2 and/or Type 3 units (left or right vestibule), there are three options to consider, two of which could be used on the Type 1 stocked items:
  1. Order the appropriate stocked full vestibule unit and the customer carefully removes the unneeded vestibule themselves.
  2. Order the stocked full vestibule unit and, prior to shipping, have Watlow remove the unneeded vestibule, as a stock modification. There is a small additional charge for this.
  3. Special order the desired Type 2 or 3 unit. This requires custom manufacturing the heater and will increase delivery time, but will keep costs to a minimum.

F.O.B.: Columbia, Missouri

Ceramic Fiber Heaters

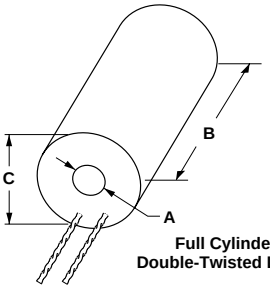

Full Cylinder
Double-Twisted Leads

Full Cylinder Units

Dimensions, inches (mm)						Electrical Ratings								
Heated Area				Overall										
I.D. (A) inches (mm) ±1/16	(±1.6)	Length (B) inches (mm) ±1/16	(±1.6)	O.D. (C) inches (mm) ±1/8	(±3.2)	Volts	Power (Watts) ±5%	Surface Loading ① W/in²	(W/cm²)	Lead Width	Approx. Net Wt. oz	(kg)	Availability	Code No.
½	(13)	6	(152)	2	(51)	60	175	18.6	(2.9)		5	(0.14)	Stock	**VC400J06A**
½	(13)	12	(305)	2	(51)	120	350	18.6	(2.9)		10	(0.28)	Stock	**VC400J12A**
¾	(19)	6	(152)	3	(76)	60	200	14.2	(2.2)		8	(0.23)	Stock	**VC400N06A**
¾	(19)	12	(305)	3	(76)	120	400	14.2	(2.2)		13	(0.37)	Stock	**VC400N12A**
1	(25)	6	(152)	3	(76)	60	220	11.7	(1.8)		9	(0.26)	Stock	**VC401A06A**
1	(25)	12	(305)	3	(76)	120	440	11.7	(1.8)		13	(0.37)	Stock	**VC401A12A**
1¼	(32)	6	(152)	3½	(89)	60	275	11.7	(1.8)	Double	11	(0.31)	Stock	**VC401E06A**
1¼	(32)	12	(305)	3½	(89)	120	550	11.7	(1.8)	Twisted	18	(0.51)	Stock	**VC401E12A**
1½	(38)	6	(152)	3½	(89)	60	300	10.6	(1.6)	Leads	12	(0.34)	Stock	**VC401J06A**
1½	(38)	12	(305)	3½	(89)	120	600	10.6	(1.6)		20	(0.57)	Stock	**VC401J12A**
1¾	(45)	6	(152)	4	(102)	120	350	10.6	(1.6)		12	(0.34)	Stock	**VC401N06A**
1¾	(45)	12	(305)	4	(102)	120	700	10.6	(1.6)		23	(0.65)	Stock	**VC401N12A**
2	(51)	6	(152)	4	(102)	120	425	11.3	(1.8)		13	(0.37)	Stock	**VC402A06A**
2	(51)	12	(305)	4	(102)	120	850	11.3	(1.8)		25	(0.71)	Stock	**VC402A12A**

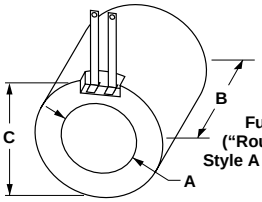

Full Cylinders
("Round Radiants")
Style A Leads Illustrated

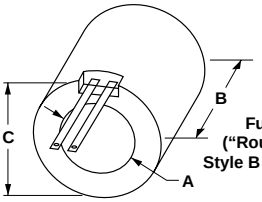

Full Cylinders
("Round Radiants")
Style B Leads Illustrated

Full Cylinder Units

Dimensions, inches (mm)						Electrical Ratings								
Heated Area				Overall										
I.D. (A) inches (mm) ±1/16	(±1.6)	Length (B) inches (mm) ±1/16	(±1.6)	O.D. (C) inches (mm) ±1/8	(±3.2)	Volts	Power (Watts) ±5%	Surface Loading ① W/in²	(W/cm²)	Lead Width inches (mm)		Approx. Net Wt. lbs	(kg)	Availability	Code No.
3	(76)	6	(152)	7	(178)	120	650	11.5	(1.8)	⅜	(10)	2.5	(1.1)	Stock	**VC403A06A**
4	(102)	6	(152)	8	(203)	120	900	11.9	(1.8)	½	(13)	3.1	(1.4)	Stock	**VC404A06A**
4	(102)	6	(152)	8	(203)	120	1100	14.6	(2.3)	⅜	(10)	3.1	(1.4)	Stock	**VC404A06T**
5	(127)	6	(152)	9	(229)	120	1250	13.7	(2.1)	½	(13)	3.5	(1.6)	Stock	**VC405A06A**
5	(127)	6	(152)	9	(229)	120	1400	14.9	(2.3)	⅜	(10)	3.6	(1.6)	Stock	**VC405A06T**
6½	(165)	6	(152)	10½	(267)	120	1500	12.2	(1.9)	¾	(19)	4.9	(2.2)	Stock	**VC406J06A**
6½	(165)	6	(152)	10½	(267)	120	2000	16.3	(2.5)	½	(13)	4.9	(2.2)	Stock	**VC406J06T**
8	(203)	6	(152)	12	(305)	120	1800	11.9	(1.8)	¾	(19)	5.7	(2.6)	Stock	**VC408A06A**
8	(203)	6	(152)	12	(305)	120	2600	17.2	(2.7)	¾	(19)	5.8	(2.6)	Stock	**VC408A06T**

For unheated insulation tubes, substitute "VN" for "VC" in the code number of the appropriate size unit.

① Units with code numbers ending in ...0A, watt densities between 10.6 to 14.2 W/in² (1.6 to 2.2 W/cm²), are coil designs that are suitable for use up to 2000°F (1093°C) maximum surface temperature. Units with code numbers ending in ...T, watt densities between 14.6 to 17.2 W/in² (2.3 to 2.7 W/cm²), are "round radiants" with sinuated element designs and the high emissivity coating, and are suitable for use to 1800°F (982°C) maximum surface temperature.

Ceramic Fiber Products

Ceramic Fiber Heaters

All units: **T** = 2 ±¼ inches (51 ±6 mm)

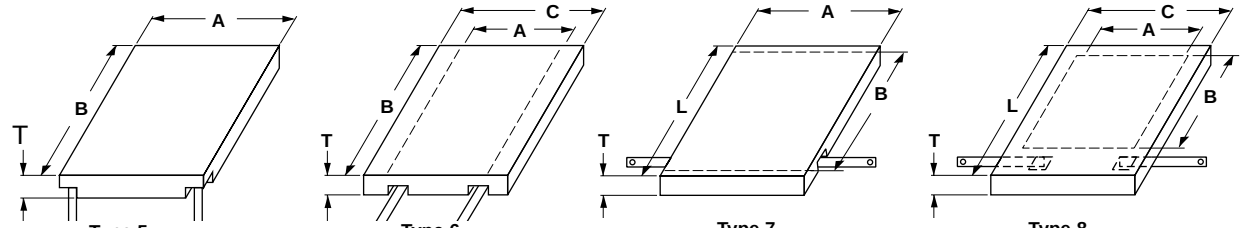

Type 5
Fully Heated
(Style A Leads Illustrated)

Type 6
Insulated Sides
(Style B Leads Illustrated)

Type 7
Insulated Ends
(Style C Leads Illustrated)

Type 8
Insulated All Edges
(Style C Leads Illustrated)

(Style A, B or C leads available on any type unit. Please specify.)

Flat Units — Embedded Coiled Elements (see page 142)

Dimensions, inches (mm)				Electrical Rating			Strip	Approximate Net Wt.				
Type 5 Heated Size		Type 6 & 8	Type 7 & 8									
Width (A) in (mm) +1/16 - 1/8 (1.6-3.2)	Length (B) in (mm) +1/16 - 1/8 (1.6-3.2)	Width (C) in (mm) +1/16 - 1/8 (1.6-3.2)	Length (L) in (mm) +1/16 - 1/8 (1.6-3.2)	Volts	Power (Watts) ±5%	Surface Loading W/in² (W/cm²)	Lead Width in (mm)	Type 5 lbs (kg)	Type 6 & 7 lbs (kg)	Type 8 lbs (kg)	Avail.	Code No.
4 (102)	6 (152)	8 (203)	10 (254)	60	275	11.5 (1.8)	3/8 (10)	0.6 (0.3)	1.1 (0.5)	1.7 (0.8)	Stock	**VF①04A06S**
	12 (305)	8 (203)	16 (406)	60	550	11.5 (1.8)	1/2 (13)	1.2 (0.5)	2.2 (1.0)	2.8 (1.3)	Stock	**VF_04A12S**
	18 (457)	8 (203)	22 (559)	120	750	10.4 (1.6)	3/8 (10)	1.9 (0.9)	3.4 (1.5)	4.5 (2.0)	Standard	**VF_04A18S**
	24 (610)	8 (203)	28 (711)	120	1100	11.5 (1.8)	1/2 (13)	2.4 (1.1)	4.4 (2.0)	5.6 (2.5)	Stock	**VF_04A24S**
6 (152)	6 (152)	10 (254)	10 (254)	60	375	10.4 (1.6)	3/8 (10)	0.9 (0.4)	1.5 (0.7)	2.4 (1.1)	Stock	**VF_06A06S**
	12 (305)	10 (254)	16 (406)	120	750	10.4 (1.6)	3/8 (10)	1.8 (0.8)	2.8 (1.3)	3.7 (1.7)	Stock	**VF_06A12S**
	18 (457)	10 (254)	22 (559)	120	1250	11.6 (1.8)	1/2 (13)	3.0 (1.4)	4.1 (1.9)	5.0 (2.3)	Stock	**VF_06A18S**
	24 (610)	10 (254)	28 (711)	240	1500	10.4 (1.6)	3/8 (10)	3.5 (1.6)	5.3 (2.4)	6.2 (2.8)	Stock	**VF_06A24S**
	30 (762)	10 (254)	34 (864)	240	2000	11.2 (1.7)	1/2 (13)	4.5 (2.0)	6.6 (3.0)	8.4 (3.8)	Standard	**VF_06A30S**
	36 (914)	10 (254)	40 (1016)	240	2500	11.6 (1.8)	1/2 (13)	6.1 (2.8)	8.3 (3.8)	10.2 (4.6)	Standard	**VF_06A36S**
8 (203)	12 (305)	12 (305)	16 (406)	120	1100	11.5 (1.8)	1/2 (13)	2.5 (1.1)	3.2 (1.5)	4.1 (1.9)	Stock	**VF_08A12S**
	18 (457)	12 (305)	22 (559)	240	1500	10.4 (1.6)	3/8 (10)	3.6 (1.6)	4.7 (2.1)	5.6 (2.5)	Stock	**VF_08A18S**
	24 (610)	12 (305)	28 (711)	240	2200	11.5 (1.8)	1/2 (13)	4.8 (2.2)	6.5 (2.9)	7.4 (3.4)	Stock	**VF_08A24S**
	30 (762)	12 (305)	34 (864)	240	2500	10.4 (1.6)	1/2 (13)	6.2 (2.8)	8.0 (3.6)	9.7 (4.4)	Standard	**VF_08A30S**
	36 (914)	12 (305)	40 (1016)	240	3000	10.4 (1.6)	3/4 (19)	7.8 (3.5)	10.0 (4.5)	11.8 (5.4)	Standard	**VF_08A36S**
10 (254)	12 (305)	14 (356)	16 (406)	240	1250	10.4 (1.6)	3/8 (10)	2.6 (1.2)	3.9 (1.8)	5.0 (2.3)	Stock	**VF_10A12S**
	18 (457)	14 (356)	22 (559)	240	1800	10.0 (1.6)	1/2 (13)	4.2 (1.9)	5.4 (2.4)	6.5 (2.9)	Stock	**VF_10A18S**
	24 (610)	14 (356)	28 (711)	240	2500	10.4 (1.6)	1/2 (13)	5.2 (2.4)	7.7 (3.5)	8.8 (4.0)	Standard	**VF_10A24S**
	30 (762)	14 (356)	34 (864)	240	3000	10.0 (1.6)	3/4 (19)	7.0 (3.2)	9.5 (4.3)	11.7 (5.3)	Stock	**VF_10A30S**
	36 (914)	14 (356)	40 (1016)	240	3600	10.0 (1.6)	3/4 (19)	9.1 (4.1)	11.5 (5.2)	13.7 (6.2)	Standard	**VF_10A36S**
12 (305)	12 (305)	16 (406)	16 (406)	240	1500	10.4 (1.6)	3/8 (10)	3.2 (1.5)	4.6 (2.1)	5.8 (2.6)	Stock	**VF_12A12S**
	18 (457)	16 (406)	22 (559)	240	2200	10.2 (1.6)	1/2 (13)	4.9 (2.2)	6.5 (2.9)	7.7 (3.5)	Stock	**VF_12A18S**
	24 (610)	16 (406)	28 (711)	240	3000	10.4 (1.6)	3/4 (19)	7.5 (3.4)	9.5 (4.3)	10.7 (4.9)	Stock	**VF_12A24S**
	30 (762)	16 (406)	34 (864)	240	3600	10.0 (1.6)	3/4 (19)	9.1 (4.1)	11.7 (5.3)	12.9 (5.9)	Standard	**VF_12A30S**
	36 (914)	16 (406)	40 (1016)	240	4400	10.2 (1.6)	3/4 (19)	12.4 (5.6)	15.5 (7.0)	16.7 (7.6)	Standard	**VF_12A36S**
14 (356)	12 (305)	18 (457)	16 (406)	240	1750	10.4 (1.6)	1/2 (13)	4.7 (2.1)	6.1 (2.8)	7.6 (3.4)	Standard	**VF_14A12S**
	18 (457)	18 (457)	22 (559)	240	2550	10.6 (1.6)	1/2 (13)	6.8 (3.1)	8.5 (3.9)	10.0 (4.5)	Standard	**VF_14A18S**
	24 (610)	18 (457)	28 (711)	240	3500	10.4 (1.6)	3/4 (19)	10.0 (4.5)	11.9 (5.4)	13.4 (6.1)	Stock	**VF_14A24S**
	30 (762)	18 (457)	34 (864)	240	4300	10.2 (1.6)	3/4 (19)	12.5 (5.7)	15.0 (6.8)	16.5 (7.5)	Standard	**VF_14A30S**
	36 (914)	18 (457)	40 (1016)	240/240	5200	10.3 (1.6)	1/2 (13)	14.2 (6.4)	17.2 (7.8)	18.7 (8.5)	Standard	**VF_14A36S②**
16 (406)	12 (305)	20 (508)	16 (406)	240	2100	10.9 (1.7)	1/2 (13)	5.2 (2.4)	6.7 (3.0)	8.4 (3.8)	Standard	**VF_16A12S**
	18 (457)	20 (508)	22 (559)	240	3000	10.4 (1.6)	3/4 (19)	8.2 (3.7)	9.9 (4.5)	11.6 (5.3)	Standard	**VF_16A18S**
	24 (610)	20 (508)	28 (711)	240	4200	10.9 (1.7)	3/4 (19)	11.9 (5.4)	13.8 (6.3)	15.5 (7.0)	Standard	**VF_16A24S**
	30 (762)	20 (508)	34 (864)	240/240	5000	10.4 (1.6)	1/2 (13)	15.2 (6.9)	17.7 (8.0)	19.4 (8.8)	Standard	**VF_16A30S②**
	36 (914)	20 (508)	40 (1016)	240/240	6000	10.4 (1.6)	3/4 (19)	17.9 (8.1)	20.9 (9.5)	22.6 (10.3)	Standard	**VF_16A36S②**

① Add Type number (Type 5 - 8) in the blank position in the code number. Example: **VF7 04A06S**. For unheated units, see catalog page 146. All units in this table are suitable for use up to **2000°F (1093°C)** maximum surface temperature.

② These units have dual elements, to be used in "parallel" for 240 volt usage. Alternate designs are available for 480 volt, 277 volt and three phase (internally wired). Consult factory.

Ceramic Fiber Heaters

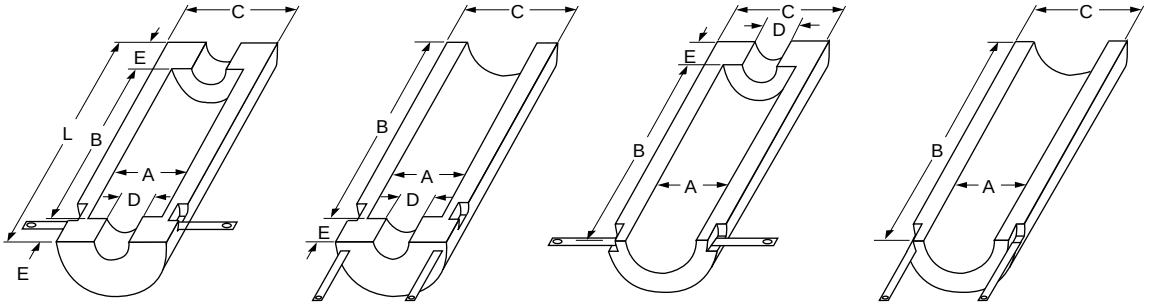

Type 1
Full Vestibule
(Style A Leads Illustrated)

Type 2
Left Vestibule
(Style B Leads Illustrated)

Type 3
Right Vestibule
(Style A Leads Illustrated)

Type 4
No Vestibule
(Style B Leads Illustrated)

(Style A or B leads available on any type unit. Please specify.)

Semi-Cylindrical Units — Embedded Coiled Elements (see page 142)

Dimensions, inches (mm)																							
Type 4 Heater Size						Type 1, 2, & 3 Sizes						Electrical Ratings						Approx. Net Wt.					
						Vestibule Sizes																	
I.D. (A) in (mm) ±⅛ (±3.2)		Length (B) in (mm) +1/16 -⅛ (+1.6 - 3.2)		O.D. (C) in (mm) (Ref)		Length (L) in (mm) +1/16 - ⅛ (+1.6 - 3.2)		Dia. (D) in (mm) ±⅛ (±3.2)		Length (E) in (mm) +1/16 - ⅛ (+1.6 - 3.2)		Volts	Power (Watts) ±5%	Surface Loading W/in² (W/cm²)		Strip Lead Width in (mm)		Type 1 Full Vest. lbs (kg)		Type 4 No Vest. lbs (kg)		Avail.	Code No.
2	(51)	6	(152)	6	(152)	8	(203)	1	(25)	1	(25)	60	275	14.6	(2.3)	⅜	(10)	1.1	(0.5)	1.1	(0.5)	Stock	VS①02A06S
		12	(305)	6	(152)	14	(356)	1	(25)	1	(25)	120	550	14.6	(2.3)	⅜	(10)	1.8	(0.8)	1.8	(0.8)	Stock	VS_02A12S
		18	(457)	6	(152)	20	(508)	1	(25)	1	(25)	120	750	13.3	(2.1)	⅜	(10)	2.3	(1.0)	2.3	(1.0)	Stock	VS_02A18S
		24	(610)	6	(152)	26	(660)	1	(25)	1	(25)	240	1100	14.6	(2.3)	⅜	(10)	3.5	(1.6)	3.5	(1.6)	Stock	VS_02A24S
3 ½	(89)	6	(152)	7½	(191)	9 ½	(241)	2	(51)	1¾	(45)	60	450	13.6	(2.1)	½	(13)	2.0	(0.9)	1.5	(0.7)	Stock	VS_03J06S
		12	(305)	7½	(191)	15 ½	(394)	2	(51)	1¾	(45)	120	900	13.6	(2.1)	½	(13)	3.1	(1.4)	2.6	(1.2)	Stock	VS_03J12S
		18	(457)	7½	(191)	21 ½	(546)	2	(51)	1¾	(45)	120	1250	12.6	(2.0)	½	(13)	4.5	(2.0)	4.0	(1.8)	Stock	VS_03J18S
		24	(610)	7½	(191)	27 ½	(699)	2	(51)	1¾	(45)	240	1800	13.6	(2.1)	½	(13)	5.4	(2.4)	4.9	(2.2)	Stock	VS_03J24S
5	(127)	6	(152)	9	(229)	11	(279)	3½	(89)	2½	(64)	60	625	13.3	(2.1)	½	(13)	3.4	(1.5)	2.5	(1.1)	Stock	VS_05A06S
		12	(305)	9	(229)	17	(432)	3½	(89)	2½	(64)	120	1250	13.3	(2.1)	½	(13)	4.9	(2.2)	4.0	(1.8)	Stock	VS_05A12S
		18	(457)	9	(229)	23	(584)	3½	(89)	2½	(64)	240	1775	12.6	(2.0)	½	(13)	5.7	(2.6)	4.8	(2.2)	Stock	VS_05A18S
		24	(610)	9	(229)	29	(737)	3½	(89)	2½	(64)	240	2500	13.3	(2.1)	½	(13)	7.9	(3.6)	6.9	(3.1)	Stock	VS_05A24S
		30	(762)	9	(229)	35	(889)	3½	(89)	2½	(64)	240	3100	13.2	(2.0)	¾	(19)	10.9	(4.9)	9.2	(4.2)	Stock	VS_05A30S
		36	(914)	9	(229)	41	(1041)	3½	(89)	2½	(64)	240	3550	12.6	(2.0)	¾	(19)	13.2	(6.0)	11.5	(5.2)	Standard	VS_05A36S
6 ½	(165)	6	(152)	10½	(267)	12	(305)	5	(127)	3	(76)	120	750	12.2	(1.9)	⅜	(10)	3.8	(1.7)	2.6	(1.2)	Stock	VS_06J06S
		12	(305)	10½	(267)	18	(457)	5	(127)	3	(76)	240	1500	12.2	(1.9)	⅜	(10)	5.4	(2.4)	4.2	(1.9)	Stock	VS_06J12S
		18	(457)	10½	(267)	24	(610)	5	(127)	3	(76)	240	2100	11.4	(1.8)	½	(13)	7.5	(3.4)	6.2	(2.8)	Stock	VS_06J18S
		24	(610)	10½	(267)	30	(762)	5	(127)	3	(76)	240	3000	12.2	(1.9)	¾	(19)	10.9	(4.9)	8.9	(4.0)	Stock	VS_06J24S
		30	(762)	10½	(267)	36	(914)	5	(127)	3	(76)	240	3750	12.2	(1.9)	¾	(19)	13.5	(6.1)	11.4	(5.2)	Standard	VS_06J30S
		36	(914)	10½	(267)	42	(1067)	5	(127)	3	(76)	240	4200	11.4	(1.8)	¾	(19)	16.4	(7.4)	14.3	(6.5)	Standard	VS_06J36S
8	(203)	6	(152)	12	(305)	12	(305)	6½	(165)	3	(76)	120	900	11.6	(1.8)	½	(13)	5.0	(2.3)	2.8	(1.3)	Standard	VS_08A06S
		12	(305)	12	(305)	18	(457)	6½	(165)	3	(76)	240	1800	11.6	(1.8)	½	(13)	7.6	(3.4)	5.0	(2.3)	Stock	VS_08A12S
		18	(457)	12	(305)	24	(610)	6½	(165)	3	(76)	240	2500	11.1	(1.7)	½	(13)	10.5	(4.8)	8.1	(3.7)	Stock	VS_08A18S
		24	(610)	12	(305)	30	(762)	6½	(165)	3	(76)	240	3500	11.6	(1.8)	¾	(19)	13.9	(6.3)	12.4	(5.6)	Standard	VS_08A24S
		30	(762)	12	(305)	36	(914)	6½	(165)	3	(76)	240	4200	11.1	(1.7)	¾	(19)	16.6	(7.5)	14.1	(6.4)	Standard	VS_08A30S
		36	(914)	12	(305)	42	(1067)	6½	(165)	3	(76)	240/240	5000	11.1	(1.7)	½	(13)	18.0	(8.2)	15.6	(7.1)	Standard	VS_08A36S②

CONTINUED

① Add Type number (Type 1 - 4) in the blank position in the code number. Example: **VS102A06S**. For unheated units, see catalog **page 146**.
Overall length applies only to the full vestibule (Type 1) Units. Types 2 and 3 are shorter by one vestibule length. Type 4 length equals (B).
Type 2 (left vestibule) and Type 3 (right vestibule) style units are not stocked. They are, however still standard units, and designs are kept on file.
All units have 2 ±¼ inch thick walls.
All units in this table are suitable for use up to **2000°F (1093°C)** maximum surface temperature.
② These units have dual elements, to be used in "parallel" for 240 volt usage. Alternate designs are available for 480 volt, 277 volt and three phase (internally wired). Consult factory.

Ceramic Fiber Products

Ceramic Fiber Heaters

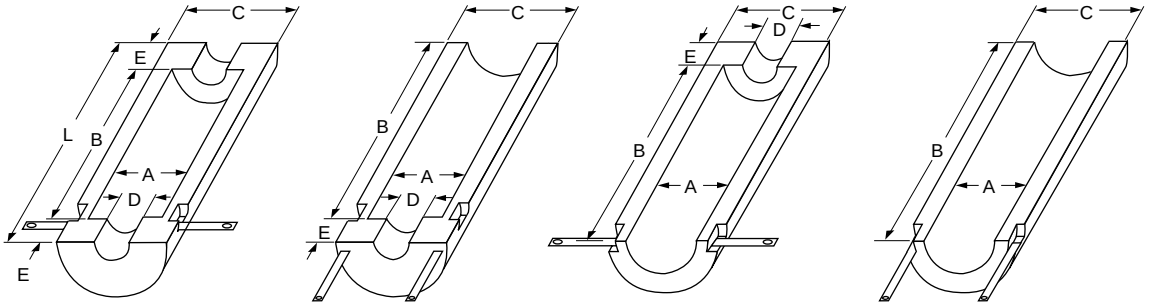

Type 1
Full Vestibule
(Style A Leads Illustrated)

Type 2
Left Vestibule
(Style B Leads Illustrated)

Type 3
Right Vestibule
(Style A Leads Illustrated)

Type 4
No Vestibule
(Style B Leads Illustrated)

(Style A or B leads available on any type unit. Please specify.)

Semi-Cylindrical Units — Embedded Coiled Elements (see page 142)

Dimensions, inches (mm)						Electrical Ratings				Approx. Net Wt.			
Type 4 Heater Size			Type 1, 2, & 3 Sizes										
			Vestibule Sizes										
I.D. (A) in (mm) ±⅛ (±3.2)	Length (B) in (mm) +1/16 -⅛ (+1.6 - 3.2)	O.D. (C) in (mm) (Ref)	Length (L) in (mm) +1/16 - ⅛ (+1.6 - 3.2)	Dia. (D) in (mm) ±⅛ (±3.2)	Length (E) in (mm) +1/16 - ⅛ (+1.6 - 3.2)	Volts	Power (Watts) ±5%	Surface Loading W/in² (W/cm²)	Strip Lead Width in (mm)	Type 1 Full Vest. lbs (kg)	Type 4 No Vest. lbs (kg)	Avail.	Code No.
10 (254)	12 (305)	14 (356)	18 (457)	8 (203)	3 (76)	240	2100	11.1 (1.7)	½ (13)	9.2 (4.2)	6.5 (2.9)	Standard	VS①10A12S
	18 (457)	14 (356)	24 (610)	8 (203)	3 (76)	240	3000	10.6 (1.6)	¾ (19)	13.3 (6.0)	10.6 (4.8)	Standard	VS_10A18S
	24 (610)	14 (356)	30 (762)	8 (203)	3 (76)	240	4200	11.1 (1.7)	¾ (19)	15.5 (7.0)	12.8 (5.8)	Standard	VS_10A24S
	30 (762)	14 (356)	36 (914)	8 (203)	3 (76)	240/240	5000	10.6 (1.6)	½ (13)	18.7 (8.5)	15.4 (7.0)	Standard	VS_10A30S②
	36 (914)	14 (356)	42 (1067)	8 (203)	3 (76)	240/240	6000	10.6 (1.6)	¾ (19)	22.6 (10.3)	19.3 (8.8)	Standard	VS_10A36S②
12 (305)	12 (305)	16 (406)	18 (457)	10 (254)	3 (76)	240	2500	11.1 (1.7)	½ (13)	9.9 (4.5)	6.8 (3.1)	Stock	VS_12A12S
	18 (457)	16 (406)	24 (610)	10 (254)	3 (76)	240	3500	10.3 (1.6)	¾ (19)	13.0 (5.9)	9.9 (4.5)	Stock	VS_12A18S
	24 (610)	16 (406)	30 (762)	10 (254)	3 (76)	240	4200	9.3 (1.4)	¾ (19)	18.5 (8.4)	15.4 (7.0)	Stock	VS_12A24S
	30 (762)	16 (406)	36 (914)	10 (254)	3 (76)	240/240	6000	10.6 (1.6)	¾ (19)	22.5 (10.2)	18.6 (8.4)	Standard	VS_12A30S②
	36 (914)	16 (406)	42 (1067)	10 (254)	3 (76)	240/240	7000	10.3 (1.6)	¾ (19)	26.9 (12.2)	23.1 (10.5)	Standard	VS_12A36S②
14 (356)	12 (305)	18 (457)	18 (457)	12 (305)	3 (76)	240	3000	11.4 (1.8)	¾ (19)	12.6 (5.7)	9.0 (4.1)	Standard	VS_14A12S
	18 (457)	18 (457)	24 (610)	12 (305)	3 (76)	240	4200	10.6 (1.6)	¾ (19)	15.3 (6.9)	11.7 (5.3)	Standard	VS_14A18S
	24 (610)	18 (457)	30 (762)	12 (305)	3 (76)	240/240	6000	11.4 (1.8)	¾ (19)	18.8 (8.5)	15.2 (6.9)	Standard	VS_14A24S②
	30 (762)	18 (457)	36 (914)	12 (305)	3 (76)	240/240	7000	10.6 (1.6)	¾ (19)	26.7 (12.1)	22.2 (10.1)	Standard	VS_14A30S②
	36 (914)	18 (457)	42 (1067)	12 (305)	3 (76)	240/240	8400	10.6 (1.6)	¾ (19)	31.8 (14.4)	27.3 (12.4)	Standard	VS_14A36S②
16 (406)	12 (305)	20 (508)	18 (457)	14 (356)	3 (76)	240	3500	11.6 (1.8)	¾ (19)	14.0 (6.4)	10.2 (4.6)	Standard	VS_16A12S
	18 (457)	20 (508)	24 (610)	14 (356)	3 (76)	240	4200	9.3 (1.4)	¾ (19)	16.9 (7.7)	13.1 (5.9)	Standard	VS_16A18S
	24 (610)	20 (508)	30 (762)	14 (356)	3 (76)	240/240	7000	11.6 (1.8)	¾ (19)	20.8 (9.4)	17.0 (7.7)	Standard	VS_16A24S②
	30 (762)	20 (508)	36 (914)	14 (356)	3 (76)	240/240	7600	10.1 (1.6)	¾ (19)	30.1 (13.7)	24.2 (11.0)	Standard	VS_16A30S②
	36 (914)	20 (508)	42 (1067)	14 (356)	3 (76)	240/240	9000	9.9 (1.5)	¾ (19)	34.4 (15.6)	28.5 (12.9)	Standard	VS_16A36S②

① Add Type number (Type 1 - 4) in the blank position in the code number. Example: **VS102A06S**. For unheated units, see catalog page 146.
Overall length applies only to the full vestibule (Type 1) Units. Types 2 and 3 are shorter by one vestibule length. Type 4 length equals (B).
Type 2 (left vestibule) and Type 3 (right vestibule) style units are not stocked. They are, however still standard units, and designs are kept on file.
All units have 2 ±¼ inch thick walls.
All units in this table are suitable for use up to **2000°F (1093°C)** maximum surface temperature.
② These units have dual elements, to be used in "parallel" for 240 volt usage. Alternate designs are available for 480 volt, 277 volt and three phase (internally wired). Consult factory.

Ceramic Fiber Products

Ceramic Fiber Heaters

All units: **T** = 2 ±¼ inches (51 ±6 mm)

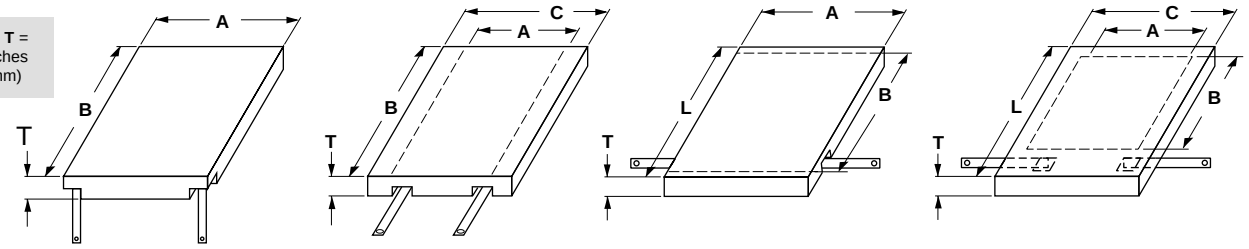

Type 5
Fully Heated
(Style A Leads Illustrated)

Type 6
Insulated Sides
(Style B Leads Illustrated)

Type 7
Insulated Ends
(Style C Leads Illustrated)

Type 8
Insulated All Edges
(Style C Leads Illustrated)

(Style A, B or C leads available on any type unit. Please specify.)

Flat Units—High Watt Density Sinuated Elements (see page 142)

Dimensions, inches (mm)								Electrical Rating			Strip	Approximate Net Wt.				
Type 5 Heated Size				Type 6 & 8		Type 7 & 8										
Width (A) in (mm) +1/16 - 1/8 (1.6-3.2)		Length (B) in (mm) +1/16 - 1/8 (1.6-3.2)		Width (C) in (mm) +1/16 - 1/8 (1.6-3.2)		Length (L) in (mm) +1/16 - 1/8 (1.6-3.2)		Volts	Power (Watts) ±5%	Surface Loading W/in² (W/cm²)	Lead Width in (mm)	Type 5 lbs (kg)	Type 6 & 7 lbs (kg)	Type 8 lbs (kg)	Avail.	Code No.
6	(152)	12	(305)	10	(254)	16	(406)	60	1250	17.4 (2.7)	½ (13)	1.7 (0.8)	2.7 (1.6)	3.6 (1.2)	Standard	**VF①06A12T**
		18	(457)	10	(254)	22	(559)	120	2000	18.5 (2.9)	½ (13)	2.6 (1.2)	3.7 (2.1)	4.6 (1.7)	Standard	**VF_06A18T**
		24	(610)	10	(254)	28	(711)	120	2500	17.4 (2.7)	½ (13)	3.2 (1.5)	5.0 (2.7)	5.9 (2.3)	Stock	**VF_06A24T**
		24	(610)	10	(254)	28	(711)	240	2500	17.4 (2.7)	½ (13)	3.2 (1.5)	5.0 (2.7)	5.9 (2.3)	Stock	**VF_06A24U**
		30	(762)	10	(254)	34	(864)	240	3400	18.9 (2.9)	½ (13)	4.5 (2.0)	7.1 (3.6)	7.9 (3.2)	Stock	**VF_06A30T**
		36	(914)	10	(254)	40	(1016)	240	4000	18.5 (2.9)	½ (13)	5.5 (2.5)	8.5 (4.2)	9.3 (3.9)	Standard	**VF_06A36T**
8	(203)	12	(305)	12	(305)	16	(406)	60	1800	18.7 (2.9)	¾ (19)	2.3 (1.0)	3.0 (1.8)	3.9 (1.4)	Stock	**VF_08A12T**
		18	(457)	12	(305)	22	(559)	120	3000	20.8 (3.2)	¾ (19)	3.5 (1.6)	4.6 (2.5)	5.5 (2.1)	Stock	**VF_08A18T**
		24	(610)	12	(305)	28	(711)	120	3600	18.7 (2.9)	¾ (19)	4.4 (2.0)	6.1 (3.2)	7.0 (2.8)	Stock	**VF_08A24T**
		30	(762)	12	(305)	34	(864)	240	5000	20.8 (3.2)	½ (13)	6.1 (2.8)	8.7 (4.4)	9.7 (4.0)	Standard	**VF_08A30T**
		36	(914)	12	(305)	40	(1016)	240	6000	20.8 (3.2)	¾ (19)	7.0 (3.2)	10.0 (5.0)	11.0 (4.5)	Standard	**VF_08A36T**
10	(254)	12	(305)	14	(356)	16	(406)	120	2000	16.7 (2.6)	½ (13)	2.4 (1.1)	3.7 (2.2)	4.8 (1.7)	Stock	**VF_10A12T**
		18	(457)	14	(356)	22	(559)	120	3600	20.0 (3.1)	¾ (19)	4.0 (1.8)	5.2 (2.9)	6.3 (2.4)	Stock	**VF_10A18T**
		24	(610)	14	(356)	28	(711)	240	4500	17.9 (2.8)	¾ (19)	4.7 (2.1)	7.2 (3.8)	8.3 (3.3)	Stock	**VF_10A24T**
		30	(762)	14	(356)	34	(864)	240	6000	20.0 (3.1)	¾ (19)	6.7 (3.0)	9.3 (4.8)	10.5 (4.2)	Standard	**VF_10A30T**
		36	(914)	14	(356)	40	(1016)	240	7200	20.0 (3.1)	¾ (19)	8.5 (3.9)	11.5 (5.8)	12.7 (5.2)	Standard	**VF_10A36T**
12	(305)	12	(305)	16	(406)	16	(406)	120	2500	17.4 (2.7)	½ (13)	2.9 (1.3)	4.3 (2.5)	5.5 (2.0)	Stock	**VF_12A12T**
		12	(305)	16	(406)	16	(406)	240	2500	17.4 (2.7)	⅜ (10)	2.9 (1.3)	4.3 (2.5)	5.5 (2.0)	Stock	**VF_12A12U**
		18	(457)	16	(406)	22	(559)	240	4000	18.5 (2.9)	½ (13)	4.5 (2.0)	6.1 (3.3)	7.3 (2.8)	Stock	**VF_12A18T**
		24	(610)	16	(406)	28	(711)	240	6000	20.8 (3.2)	¾ (19)	6.6 (3.0)	8.6 (4.4)	9.8 (3.9)	Stock	**VF_12A24T**
		30	(762)	16	(406)	34	(864)	240	7200	20.0 (3.1)	¾ (19)	8.6 (3.9)	11.2 (5.7)	12.6 (5.1)	Standard	**VF_12A30T**
		36	(914)	16	(406)	40	(1016)	240/240	8400	19.4 (3.0)	¾ (19)	10.2 (4.6)	13.2 (6.6)	14.6 (6.0)	Standard	**VF_12A36T②**
14	(356)	12	(305)	18	(457)	16	(406)	120	3500	20.8 (3.2)	¾ (19)	4.2 (1.9)	5.3 (3.0)	6.7 (2.4)	Standard	**VF_14A12T**
		18	(457)	18	(457)	22	(559)	240	4900	19.4 (3.0)	½ (13)	6.1 (2.8)	7.6 (4.1)	9.1 (3.4)	Standard	**VF_14A18T**
		24	(610)	18	(457)	28	(711)	240	7000	20.8 (3.2)	¾ (19)	8.5 (3.9)	10.5 (5.4)	11.9 (4.8)	Standard	**VF_14A24T**
		30	(762)	18	(457)	34	(864)	240/240	8400	20.0 (3.1)	¾ (19)	10.7 (4.9)	13.2 (6.6)	14.6 (6.0)	Standard	**VF_14A30T②**
		36	(914)	18	(457)	40	(1016)	240/240	9800	19.4 (3.0)	½ (13)	12.2 (5.5)	15.2 (7.5)	16.6 (6.9)	Standard	**VF_14A36T②**
16	(406)	12	(305)	20	(508)	16	(406)	120	3550	18.5 (2.9)	¾ (19)	4.7 (2.1)	5.7 (3.4)	7.4 (2.6)	Standard	**VF_16A12T**
		18	(457)	20	(508)	22	(559)	240	5750	20.0 (3.1)	¾ (19)	7.1 (3.2)	8.6 (4.7)	10.3 (3.9)	Standard	**VF_16A18T**
		24	(610)	20	(508)	28	(711)	240	7100	18.5 (2.9)	¾ (19)	9.5 (4.3)	11.5 (6.0)	13.2 (5.2)	Standard	**VF_16A24T**
		30	(762)	20	(508)	34	(864)	240/240	9600	20.0 (3.1)	½ (13)	11.7 (5.3)	14.2 (7.2)	15.9 (6.4)	Standard	**VF_16A30T②**
		36	(914)	20	(508)	40	(1016)	240/240	11500	20.0 (3.1)	¾ (19)	14.2 (6.4)	17.2 (8.6)	18.9 (7.8)	Standard	**VF_16A36T②**

① Add Type number (Type 5 - 8) in the blank position in the code number. Example: **VF806A12T**. For unheated units, see catalog page 146.

Sinuated wire, high watt density units are provided with embedded sinuated elements and high emissivity coating, unless exposed sinuated is specified when manufactured. (These are **not stocked**.) Consult factory.

All units in this table are suitable for use up to **1800°F (982°C)** maximum surface temperature.

② These units have dual elements, to be used in "parallel" for 240 volt usage. Alternate designs are available for 480 volt, 277 volt and three phase (internally wired). Consult factory.

Ceramic Fiber Products

Ceramic Fiber Heaters

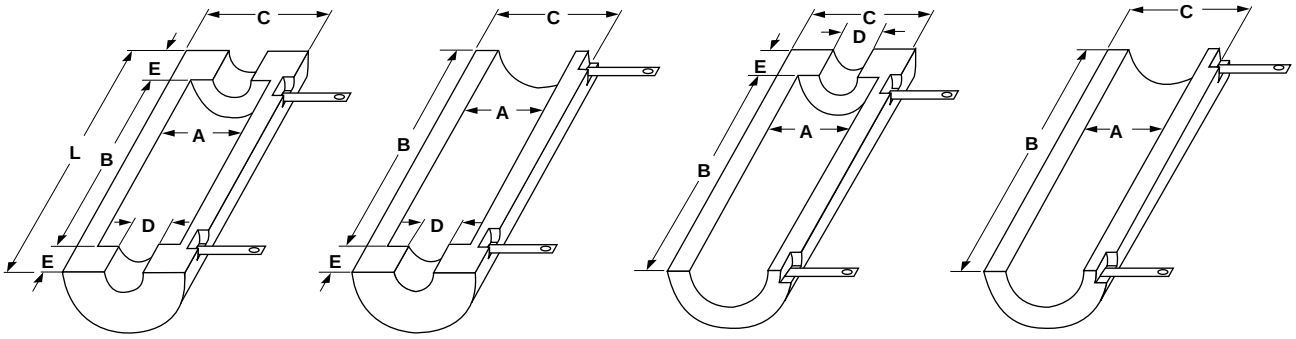

Type 1
Full Vestibule
(Style A Leads Illustrated)

Type 2
Left Vestibule
(Style A Leads Illustrated)

Type 3
Right Vestibule
(Style A Leads Illustrated)

Type 4
No Vestibule
(Style A Leads Illustrated)

Semi-Cylindrical Units—High Watt Density Sinuated Elements (see page 142)

Dimensions, inches (mm)						Electrical Ratings				Approx. Net Wt.			
Type 4 Heater Size			Type 1, 2, & 3 Sizes										
			Vestibule Sizes										
I.D. (A) in (mm) ±⅛ (±3.2)	Length (B) in (mm) +1/16 -⅛ (+1.6 - 3.2)	O.D. (C) in (mm) (Ref)	Length (L) in (mm) +1/16 - ⅛ (+1.6 - 3.2)	Dia. (D) in (mm) ±⅛ (±3.2)	Length (E) in (mm) +1/16 - ⅛ (+1.6 - 3.2)	Volts	Power (Watts) ±5%	Surface Loading W/in² (W/cm²)	Strip Lead Width in (mm)	Type 1 Full Vest. lbs (kg)	Type 4 No Vest. lbs (kg)	Avail.	Code No.
5 (127)	6 (152)	9 (229)	11 (279)	3½ (89)	2½ (64)	60	750	15.9 (2.5)	⅜ (10)	3.1 (1.4)	2.3 (1.0)	Standard	**VS①05A06T**
	12 (305)	9 (229)	17 (432)	3½ (89)	2½ (64)	60	1400	14.9 (2.3)	¾ (19)	4.5 (2.0)	3.6 (1.6)	Standard	**VS_05A12T**
	18 (457)	9 (229)	23 (584)	3½ (89)	2½ (64)	120	2100	14.9 (2.3)	½ (13)	5.2 (2.4)	4.3 (2.0)	Standard	**VS_05A18T**
	24 (610)	9 (229)	29 (737)	3½ (89)	2½ (64)	120	2800	14.9 (2.3)	¾ (19)	6.9 (3.1)	6.0 (2.7)	Standard	**VS_05A24T**
	30 (762)	9 (229)	35 (889)	3½ (89)	2½ (64)	240	3500	14.9 (2.3)	½ (13)	8.3 (3.8)	7.4 (3.4)	Standard	**VS_05A30T**
	36 (914)	9 (229)	41 (102)	3½ (89)	2½ (64)	240	4200	14.9 (2.3)	½ (13)	9.6 (4.4)	8.7 (3.9)	Standard	**VS_05A36T**
6½ (165)	6 (152)	10½ (267)	12 (305)	5 (127)	3 (76)	60	1000	16.3 (2.5)	½ (13)	3.6 (1.6)	2.4 (1.1)	Standard	**VS_06J06T**
	12 (305)	10½ (267)	18 (457)	5 (127)	3 (76)	120	2000	16.3 (2.5)	½ (13)	5.1 (2.3)	3.9 (1.8)	Standard	**VS_06J12T**
	18 (457)	10½ (267)	24 (610)	5 (127)	3 (76)	120	3000	16.3 (2.5)	¾ (19)	6.8 (3.1)	5.6 (2.5)	Standard	**VS_06J18T**
	24 (610)	10½ (267)	30 (762)	5 (127)	3 (76)	240	4000	16.3 (2.5)	½ (13)	9.5 (4.3)	7.4 (3.4)	Standard	**VS_06J24T**
	30 (762)	10½ (267)	36 (914)	5 (127)	3 (76)	240	5000	16.3 (2.5)	½ (13)	11.0 (5.0)	9.3 (4.2)	Standard	**VS_06J30T**
	36 (914)	10½ (267)	42 (1067)	5 (127)	3 (76)	240	6000	16.3 (2.5)	¾ (19)	12.4 (5.6)	11.2 (5.1)	Standard	**VS_06J36T**
8 (203)	6 (152)	12 (305)	12 (305)	6½ (165)	3 (76)	60	1300	17.2 (2.7)	½ (13)	4.1 (1.9)	2.6 (1.2)	Standard	**VS_08A06T**
	12 (305)	12 (305)	18 (457)	6½ (165)	3 (76)	120	2600	17.2 (2.7)	½ (13)	6.9 (3.1)	5.4 (2.4)	Standard	**VS_08A12T**
	18 (457)	12 (305)	24 (610)	6½ (165)	3 (76)	240	3900	17.2 (2.7)	½ (13)	8.5 (3.9)	7.0 (3.2)	Standard	**VS_08A18T**
	24 (610)	12 (305)	30 (762)	6½ (165)	3 (76)	240	5200	17.2 (2.7)	½ (13)	12.0 (5.4)	10.5 (4.8)	Standard	**VS_08A24T**
	30 (762)	12 (305)	36 (914)	6½ (165)	3 (76)	240	6250	16.7 (2.6)	¾ (19)	13.8 (6.3)	12.3 (5.6)	Standard	**VS_08A30T**
	36 (914)	12 (305)	42 (1067)	6½ (165)	3 (76)	240/240	7800	17.2 (2.7)	¾ (19)	15.6 (7.1)	14.1 (6.4)	Standard	**VS_08A36T②**

CONTINUED

① Add Type number (Type 1 - 4) in the blank position in the code number. Example: **VS106J06T**. For unheated units, see catalog **page 146.**

Sinuated wire, high watt density units are provided with embedded sinuated elements and high emissivity coating, unless exposed sinuated is specified when manufactured. (These are **not stocked**.) Consult factory.

Overall length applies only to the full vestibule (Type 1) units. Types 2 and 3 are shorter by one vestibule length. Type 4 length equals (B).

Type 2 (left vestibule) and Type 3 (right vestibule) style units are not stocked. They are, however, still standard units, and designs are kept on file.

All units have 2 ±¼ inch thick walls.

All units in this table are suitable for use up to **1800°F (982°C)** maximum surface temperature.

② These units have dual elements, to be used in "parallel" for 240 volt usage. Alternate designs are available for 480 volt, 277 volt and three phase (internally wired). Consult factory.

Ceramic Fiber Products

Ceramic Fiber Heaters

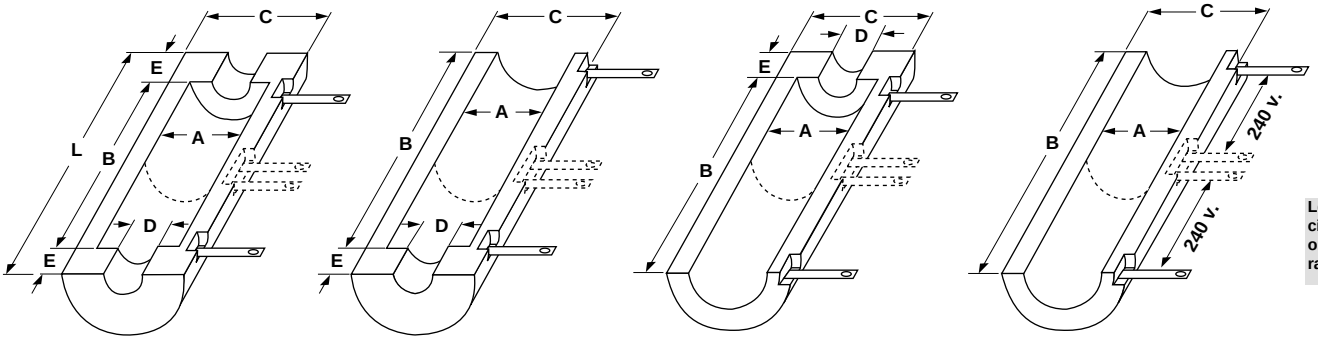

Leads on dual circuit units only. See ratings below.

Type 1
Full Vestibule
(Style A Leads Illustrated)

Type 2
Left Vestibule
(Style A Leads Illustrated)

Type 3
Right Vestibule
(Style A Leads Illustrated)

Type 4
No Vestibule
(Style A Leads Illustrated)

Semi-Cylindrical Units—High Watt Density Sinuated Elements (see page 142)

Dimensions, inches (mm)						Electrical Ratings				Approx. Net Wt.			
Type 4 Heater Size			Type 1, 2, & 3 Sizes										
			Vestibule Sizes										
I.D. (A) in (mm) ±⅛ (±3.2)	Length (B) in (mm) +1/16 -⅛ (+1.6 - 3.2)	O.D. (C) in (mm) (Ref)	Length (L) in (mm) +1/16 -⅛ (+1.6 - 3.2)	Dia. (D) in (mm) ±⅛ (±3.2)	Length (E) in (mm) +1/16 - ⅛ (+1.6 - 3.2)	Volts	Power (Watts) ±5%	Surface Loading W/in2 (W/cm2)	Strip Lead Width in (mm)	Type 1 Full Vest. lbs (kg)	Type 4 No Vest. lbs (kg)	Avail.	Code No.
10 (254)	12 (305)	14 (356)	18 (457)	8 (203)	3 (76)	240	3200	17.0 (2.6)	½ (13)	8.5 (3.9)	5.8 (2.6)	Standard	**VS①10A12T**
	18 (457)	14 (356)	24 (610)	8 (203)	3 (76)	240	4800	17.0 (2.6)	½ (13)	12.0 (5.4)	9.3 (4.2)	Standard	**VS_10A18T**
	24 (610)	14 (356)	30 (762)	8 (203)	3 (76)	240	6400	17.0 (2.6)	¾ (19)	13.8 (6.3)	11.1 (5.0)	Standard	**VS_10A24T**
	30 (762)	14 (356)	36 (914)	8 (203)	3 (76)	240/240	8000	17.0 (2.6)	¾ (19)	17.6 (8.0)	14.9 (6.8)	Standard	**VS_10A30T②**
	36 (914)	14 (356)	42 (1067)	8 (203)	3 (76)	240/240	9600	17.0 (2.6)	½ (13)	21.3 (9.7)	18.6 (8.4)	Standard	**VS_10A36T②**
12 (305)	12 (305)	16 (406)	18 (457)	10 (254)	3 (76)	240	3800	16.8 (2.6)	½ (13)	8.9 (4.0)	5.9 (2.7)	Standard	**VS_12A12T**
	18 (457)	16 (406)	24 (610)	10 (254)	3 (76)	240	5700	16.8 (2.6)	¾ (19)	11.2 (5.1)	8.1 (3.7)	Standard	**VS_12A18T**
	24 (610)	16 (406)	30 (762)	10 (254)	3 (76)	240	7600	16.8 (2.6)	¾ (19)	16.7 (7.6)	13.6 (6.2)	Standard	**VS_12A24T**
	30 (762)	16 (406)	36 (914)	10 (254)	3 (76)	240/240	9600	17.0 (2.6)	½ (13)	18.0 (8.2)	14.9 (6.8)	Standard	**VS_12A30T②**
	36 (914)	16 (406)	42 (1067)	10 (254)	3 (76)	240/240	11400	16.8 (2.6)	¾ (19)	19.2 (8.7)	16.1 (7.3)	Standard	**VS_12A36T②**
14 (356)	12 (305)	18 (457)	18 (457)	12 (305)	3 (76)	240	4400	16.7 (2.6)	½ (13)	11.4 (5.2)	7.7 (3.5)	Standard	**VS_14A12T**
	18 (457)	18 (457)	24 (610)	12 (305)	3 (76)	240	6600	16.7 (2.6)	¾ (19)	12.9 (5.9)	9.4 (4.3)	Standard	**VS_14A18T**
	24 (610)	18 (457)	30 (762)	12 (305)	3 (76)	240/240	8800	16.7 (2.6)	½ (13)	16.3 (7.4)	12.7 (5.8)	Standard	**VS_14A24T②**
	30 (762)	18 (457)	36 (914)	12 (305)	3 (76)	240/240	11400	17.3 (2.7)	¾ (19)	19.4 (8.8)	15.8 (7.2)	Standard	**VS_14A30T②**
	36 (914)	18 (457)	42 (1067)	12 (305)	3 (76)	240/240	13200	16.7 (2.6)	¾ (19)	22.4 (10.2)	18.8 (8.5)	Standard	**VS_14A36T②**
16 (406)	12 (305)	20 (508)	18 (457)	14 (356)	3 (76)	240	5000	16.6 (2.6)	½ (13)	11.8 (5.4)	8.0 (3.6)	Standard	**VS_16A12T**
	18 (457)	20 (508)	24 (610)	14 (356)	3 (76)	240/240	7500	16.6 (2.6)	¾ (19)	15.1 (6.8)	11.3 (5.1)	Standard	**VS_16A18T**
	24 (610)	20 (508)	30 (762)	14 (356)	3 (76)	240/240	10000	16.6 (2.6)	½ (13)	18.1 (8.2)	14.3 (6.5)	Standard	**VS_16A24T②**
	30 (762)	20 (508)	36 (914)	14 (356)	3 (76)	240/240	12800	16.8 (2.6)	¾ (19)	22.3 (10.1)	18.5 (8.4)	Standard	**VS_16A30T②**
	36 (914)	20 (508)	42 (1067)	14 (356)	3 (76)	240/240	15000	16.6 (2.6)	¾ (19)	26.4 (12.0)	22.6 (10.3)	Standard	**VS_16A36T②**

① Add Type number (Type 1 through 4) in the blank position in the code number. Example **VS106J06T**. For unheated units, see catalog page 146.

Sinuated wire, high watt density units are provided with embedded sinuated elements and high emissivity coating, unless exposed sinuated is specified when manufactured. (These are **not stocked.**) Consult factory.

Overall length applies only to the full vestibule (Type 1) units. Types 2 and 3 are shorter by one Vestibule length. Type 4 length equals (B).

Type 2 (left vestibule) and Type 3 (right vestibule) style units are not stocked. They are, however, still standard units, and designs are kept on file.

All units have 2 ±¼ inch thick walls.

All units in this table are suitable for use up to **1800°F (982°C)** maximum surface temperature.

② These units have dual elements, to be used in "parallel" for 240 volt usage. Alternate designs are available for 480 volt, 277 volt and three phase (internally wired). Consult factory.

Ceramic Fiber Products

Ceramic Fiber Heaters

How to Order

Made-to-Order Units

Ordering Information

Quantity: When ordering, specify quantity of units desired. Semi-cylindrical units are sold as "each half." Two to make the pair are usually required. Please include the number of desired spares or extras in the total quantity.

Code number: Unit code number, if an exact reorder of a previously designed made-to-order unit. Please reconfirm volts and watts, and lead orientation and length. Most stock and standard heaters allow selection of several stock modifications (see below) and also termination options **(see pages 150 and 151)**.

Dimensions for made-to-order units: As a minimum, use the dimensions (A, B, C, D, E, L, T) shown on **pages 154 to 160**. Include drawing if possible. Specifications: Heated area, width and length, overall width/length, thickness, electrical ratings, etc.

Wattage: 6.5 to 25 W/in^2 (1.0 - 3.9 W/cm^2) on the heating surface is the recommended watt density range, for operation in the 1500 to 2200°F (815 - 1204°C) range. [Note: At the **higher** temperatures, **lower** watt densities must be employed.] Please provide operating temperatures and conditions. Consult Watlow for higher watt densities at other temperatures. Generally, for higher operating temperature limits, lower watt densities will have to be used.

Voltage: 60, 120 and 240V~(ac) are provided on the stock/standard units, but up to 600 volts is possible on made-to-order units. Internally connected three-lead, three-phase units are also possible on made-to-order units (these are normally internally wye-connected). Consult Watlow on special voltage requirements.

Leads: Lead length and orientation (i.e. Style A, B or C). (Lead Style A, 12 inch (305 mm) long is standard.)

Shipping weight: The product listing tables show net weights per unit. To estimate gross shipping weight, add another 30 percent to the total. Additional shipping/packaging charges may be incurred for certain large orders. Due to the light weight but large sizes of these heaters, "DIM" (dimensional box weights) weighting may occur on expedited air shipments.

Modifications

It is possible to order certain special modifications to stock and standard units prior to shipment. Some of these are listed below, with a brief description.

Beveled and trimmed edges: The unheated edges of Type 6, 7 and 8 units can be factory modified to provide in-between overall sizes, and can also be angle cut to form regular polygon shapes around objects. Angles between zero degrees and 45 degrees can be accommodated.

Black surface coating: Improves the emissivity of the heater's hotface, see graph on **page 146** for emissivity values and consult factory for pricing adders.

Leads: Besides length and orientations, see **page 151** for other "Special Add-On Lead" configurations.

Thermocouple holes: Ceramic tubes on **page 151** are used to make electrically isolated holes through heaters. To order, the inside **diameter** and **location** must be specified. Also, a special "behind-the-element" horizontal thermocouple tube is available, to very closely track element temperature for over-temperature protection and improved heater life.

Notches or long slots in no-heat areas of units: Rectangular and semi-circular notches can be cut into no-heat areas and vestibules on most units. Normally, a sketch or drawing that specifies exact location must be included with your order. Fax numbers to send drawings to are available.

Shortened vestibule lengths: Modified vestibule lengths require retaining at least ½ inch (13 mm) of insulation for adequate strength, or completely removed ("0" length) to make Type 1 units into left vestibule (i.e., Type 2) or right vestibule (i.e., Type 3) units.

Lead Times

Stock: Same or next working day shipment, subject to current inventory (consult factory for latest status). No set up charges. Orders must be placed before 2:00 p.m., CST/CDT, USA.

Stock with modifications: Two to three working days shipment. Nominal set up charges only for specific modifications, not for the basic heater.

Standard: Shipment normally within four weeks, but check with factory for latest lead time status. No set up charges.

Molded Ceramic Fiber Insulation Modules

For heating applications requiring insulation panels, Watlow makes available many shapes and sizes of stock, standard and made-to-order molded ceramic fiber insulation modules. These insulation modules are made of the same high quality, high temperature, low mass ceramic fiber material used in our heaters.

As a complement to the overall product line, these modules offer additional avenues to solve high temperature industrial insulation problems. Furthermore, without heating elements, molded ceramic fiber insulation modules can come in more complex shapes to conform to application requirements.

Molded-to-shape insulation modules also make handling and installation easier compared to other insulation methods. Since these are molded to shape, sanding, cutting and grinding of blocks to achieve the desired configuration is not required.

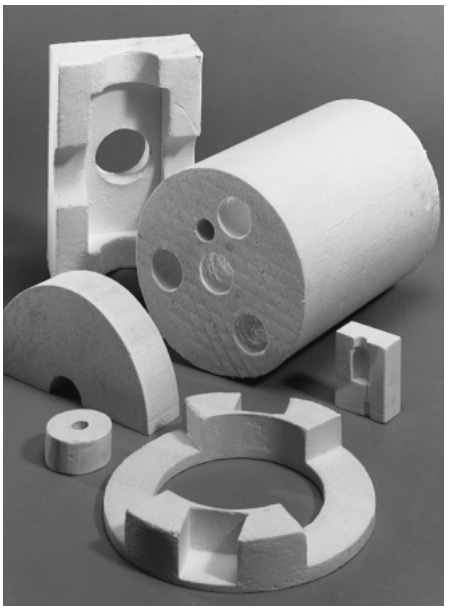

Highly resistant to thermal shock and chemical attack, except for hydrofluoric and phosphoric acids, and strong alkalies, insulation modules are unaffected by oil and water. If the insulation gets wet, physical and thermal properties can be fully restored when dried.

Note: If using molded ceramic fiber insulation modules along with other Watlow ceramic fiber **heaters**, oil, water and other contaminants can and will negatively affect the heating element portion of the ceramic fiber heater.

Molded insulation modules are rated for up to 2300°F (1260°C) continuous duty. The inorganic binder eliminates smoke or combustion during initial heating to 300°F (150°C) and above. Vacuum molded density is 10 to 15 lbs/ft^3 (160 to 240 kg/m^3), same as the ceramic fiber heaters.

Size Limits: Maximum flat size is 34 x 52 inches (860 x 1320 mm) with a molded thickness of more than four inches (102 mm). Maximum inside diameter for semi-cylindrical modules is 24 inches (610 mm). For applications requiring curved insulation pieces in excess of 180 degrees, consider using multiple arc-section modules or an array system of multiple flat units.

Application and Technical Data

The same insulation performance and technical data of ceramic fiber heaters applies to molded ceramic fiber insulation modules. For specific information of insulation performance properties, see the *Heat Loss and Energy Transfer* portion of the ceramic fiber heaters section on **page 146**

Accessories

Where appropriate, many of the same accessories for ceramic fiber heaters are available for use with molded ceramic fiber insulation modules. These accessories can be used to modify, provide mounting options, and effect minor repairs and maintenance. For details, turn to **pages 151 and 152**.

Ordering Information

Stock and Standard: Molded ceramic fiber insulation modules are available in exactly the same sizes and shapes as the ceramic fiber heaters listed in the previous ordering tables. In general, the ordering code numbers of these insulation modules are derived by replacing the second alpha character in the heater code number (i.e., F, S, C, R, etc.) with **N** to designate **no-element.**

Made-to-Order: Watlow sales engineers can work with customers to design and manufacture modules to meet specific insulation needs.

Quick Ship • *Same day shipment on stock units with orders received by 11:00 a.m. CST.*

Flexible Heaters

Flexible Shapes and Geometries

Flexible heaters from Watlow are just what the name implies: thin, bendable and shaped to fit your equipment. You can use your imagination to apply heat to the most complex shapes and geometries, without sacrificing efficiency or dependability. With Watlow's customization capabilities, you have the maximum amount of freedom when designing your equipment.

Excellent heat transfer results from the heater's thin design and its direct bonding to the application. Flexible heaters also provide fast heatup and cool down rates, uniform heat distribution and high watt densities.

Features and Benefits

- **Flat geometry** permits holes, notches and unusual shapes.
- **Four material types and two element styles** are available for wider flexibility in meeting your requirements. See next page for performance capabilities.
- **Lightweight construction and low thermal mass** permit use in applications that have limited space or weight requirements.
- **Heating elements** as close as 0.003 inches (0.08 mm) from the heated part respond to controls with faster heat up and cool down.
- **Uniformly spaced element paths**, placed within ¼ inch (6 mm) of the heater perimeter, distribute heat more evenly.

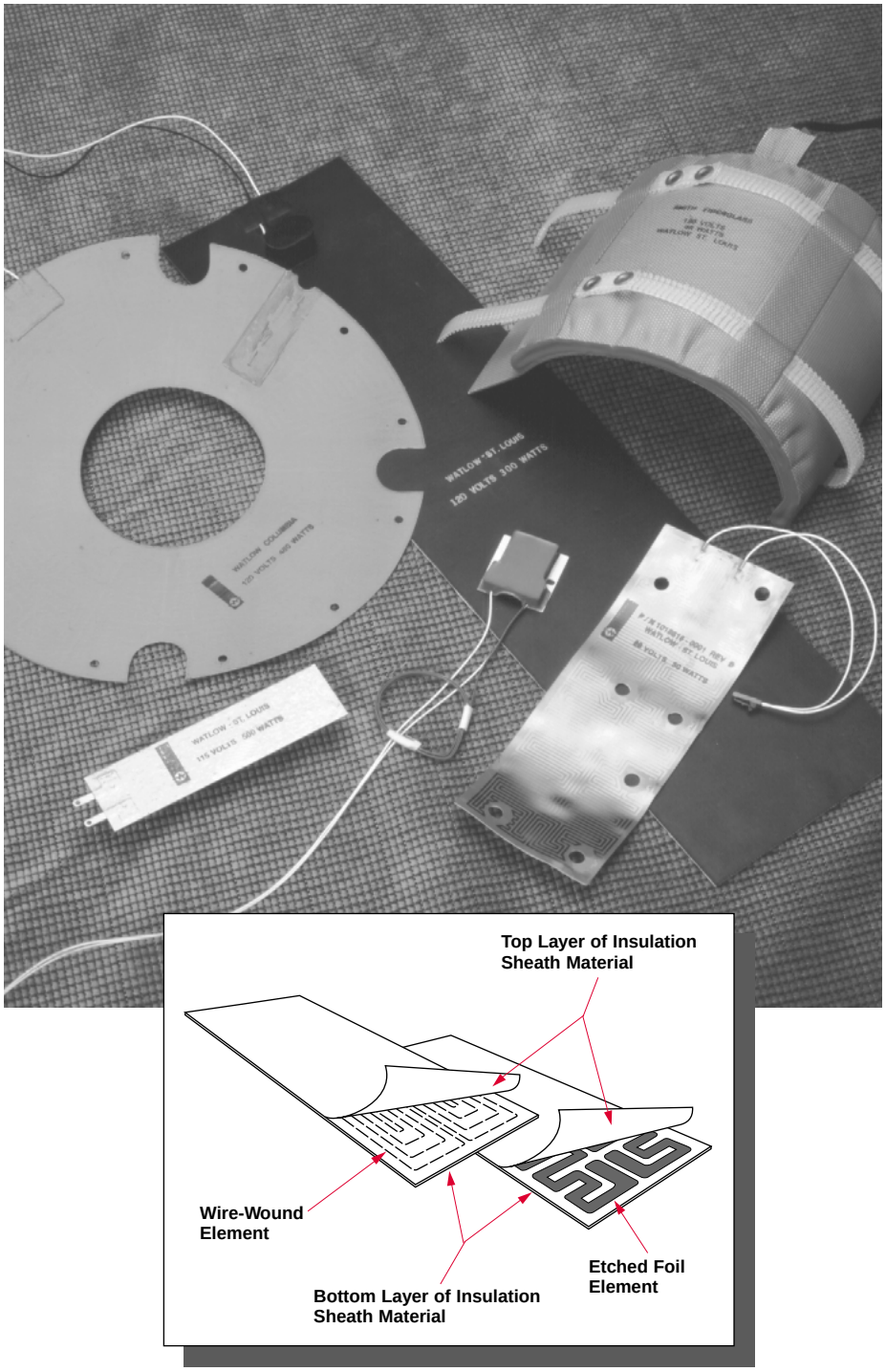

Applications

- Medical equipment such as blood analyzers, respiratory therapy units and hydrotherapy baths
- Satellite and communication equipment
- Freeze protection for military hardware, aircraft instrumentation, hydraulic equipment, etc.
- Battery heating
- Semiconductor equipment
- Foodservice equipment
- Any application requiring a flexible shape or design

Flexible Shapes and Geometries

Applications and Technical Data

Four Material Types

Silicone Rubber:

This rugged, moisture- and chemical-resistant material is easily bonded or cemented to parts. Watlow silicone rubber heaters can handle temperatures up to 500°F (260°C). Many styles of these heaters are available with UR®, cUR® and VDE recognition. See **page 171** for details.

Kapton®:

A thin, lightweight transparent material from du Pont, Kapton® is designed for extremely precise heating requirements ranging from -319° to 392°F (-195° to 200°C). It is ideal for applications requiring low outgassing in a vacuum, or resistance to radiation, fungus and chemicals. Many custom heaters can be UR® and cUR® recognized.

Neoprene:

Neoprene resists weathering, abrasion and chemicals. It can be used economically in applications to 250°F (120°C), where high watt densities are not needed.

HT Foil:

This mica-insulated, high temperature foil is a semi-rigid heater. Operating temperatures up to 1100°F (595°C) can be achieved.

See pages 169 to 182 and 189 to 194 for information on silicone rubber, Kapton®, neoprene, and HT foil heaters.

Two Element Types

Watlow offers both wire-wound and etched foil resistance elements. These element types are available in most insulating materials, and Watlow can recommend the type best suited to your application.

Wire-Wound Elements

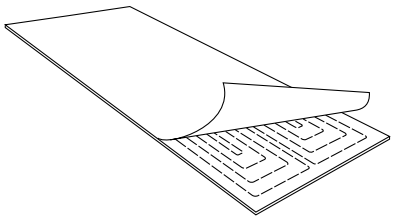

Available on silicone rubber and neoprene heaters, this element style is created by spiraling fine resistance wires around a fiberglass cord. The element is then laid out in a pattern designed specifically for your application. The benefits of wire-wound elements include:

- Excellent physical strength and flexibility; repeated flexing of the heater has no harmful effects on its performance
- Good economy for small production runs
- Conforms readily to curved surfaces, including small radius bends

Drum heaters and conduit bender heaters are typical examples of applications that use the wire-wound method. These heaters are flexed repeatedly during use, but due to their wiring, no internal damage will occur.

Etched Foil Elements

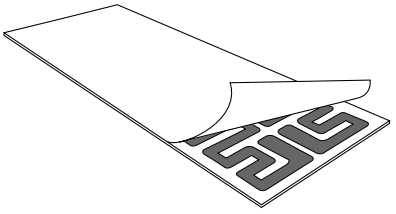

This element type, created by acid etching a circuit in nickel resistance alloy foil, is available in silicone rubber, Kapton® and HT foil heater types. The etched foil element is noted for its excellent circuit pattern repeatability and superior heat transfer, which results from greater area coverage of the element. Other benefits include:

- Delivers more heat and up to twice the watt density of a wire-wound element, providing longer heater life
- Most economical for large production runs
- Complex heat distribution patterns can be provided

The etched foil element style is usually recommended for applications requiring high temperatures or watt densities, or multiple zoning.

Flexible Heaters

Flexible Shapes and Geometries

Options

Mounting Methods

Watlow offers various attachment techniques, all designed for fast installation. These include: three types of adhesives; Watlow's special factory vulcanization process; and mechanical fasteners.

Complete installation instructions are available from Watlow. Ask for technical letter #2, silicone rubber heaters.

Pressure Sensitive Adhesive Surface (PSAS)

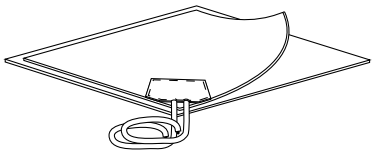

Note: PSAS maximum six months storage life before heater installation.

For speed, convenience and economy of installation, specify **PSAS**. Simply peel off the protective backing and roll the heater in place for an even bond to a clean, smooth surface.

Note: PSAS is not recommended for curved surfaces or for heaters rated above 10 W/in^2 (0.8 W/cm^2). It should not be used for applications exceeding 400°F (205°C) on silicone rubber, 300°F (150°C) on Kapton® or 200°F (93°C) for neoprene.

Field Applied Adhesive (RTV)

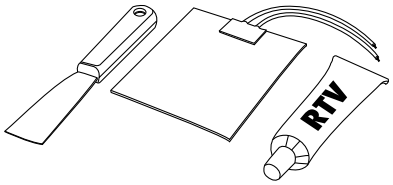

Note: Not recommended for Kapton® heaters.

For a stronger bond, or when long storage is probable, a **room temperature vulcanizing (RTV) silicone adhesive** is available from stock within two days. Watlow offers red RTV for temperatures up to 500°F (260°C). White RTV is available from adhesive suppliers for temperatures up to 400°F (205°C). Watlow's one-part RTV is self-priming and can be ordered in either 3 oz (90 ml) or 12 oz (355 ml) tubes. For larger heaters requiring longer adhesive working time, two-part RTV kits can be purchased from adhesive suppliers. These kits require primer on the surface prior to application of the adhesive.

Silicone Contact Cement Kit

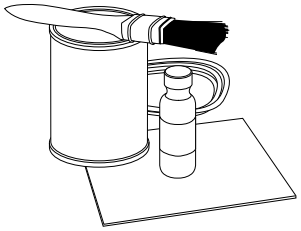

This two-part adhesive consists of a resin and catalyst which are easily mixed together and applied with a paintbrush. Recommended usage is for field cementing of silicone rubber heaters to customer parts. Available from stock, the cement kit will handle temperatures to 350°F (175°C). The resin is available in pint or quart containers. To order, specify **silicone contact cement**, and container size.

Factory Bonding

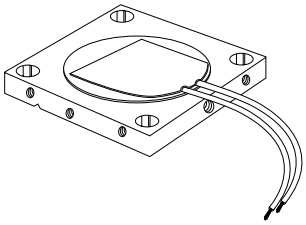

This attachment technique provides a strong, void-free bond for excellent heat transfer and extended heater life. Watlow's expertise in bonding heaters to customer parts has proven extremely successful.

Bonding is recommended for applications that reach maximum temperatures of 500°F (260°C) on silicone rubber and 300°F (150°C) on Kapton®.

Mechanical Fasteners

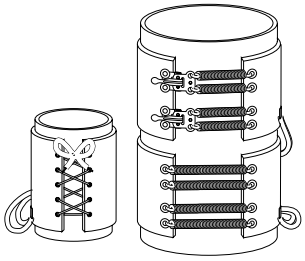

When a wire-wound flexible heater must be detachable, any type of fastener normally used with fabrics can usually be built into the sheath material of Watlow flexible heaters. The most common types are latch fasteners, boot hooks and grommets. Other styles include snap fasteners, springs, velcro style fastener strips and lacing cord. The grommets and boot hooks are commonly used with tension springs to compensate for slight variations in part size.

Flexible Shapes and Geometries

Termination Styles

Watlow offers many types of leads and terminations. Leads can project from any position along the perimeter of the unit. **They will be centered on the short side width of rectangular heaters unless specified otherwise.**

Standard Leads—Type E Teflon®

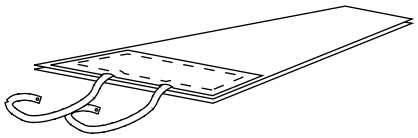

Leads shown exiting end of heater, centered on short side.

Watlow's standard leads are 12 inches (305 mm) long, white, Teflon® insulated, flexible, plated copper wire. They are rated for 392°F (200°C)/600 volts per MIL-W-16878, Type E. The lead connections on or at the heater are insulated with a cap of sheath material, vulcanized to the heater body. All custom flexible heaters except HT foil will be supplied with this lead type unless otherwise specified.

HPN Cord and Plug Set

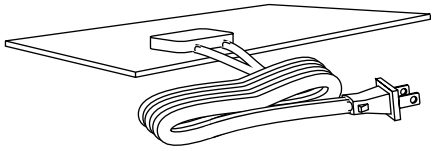

Molded leads are shown exiting edge of heater. Capped leads are also available.

For removable heaters, a six foot (1.8 m) HPN (neoprene insulated) cord and plug set provides convenience. It is rated for 194°F (90°C)/ 300V~(ac). HPN cord without a plug is also available in any length.

Silicone Insulated Leads

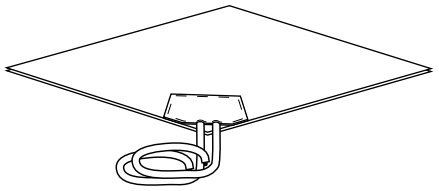

Leads shown exiting corner of heater.

For a better moisture seal, specify UL® silicone insulated lead wires. This lead type is rated for 302°F (150°C)/ 600V~(ac). Any lead length is available. Note: Silicone rubber heaters are not designed to be waterproof. Excess exposure to moisture may facilitate premature heater failure.

Special Teflon® Leads

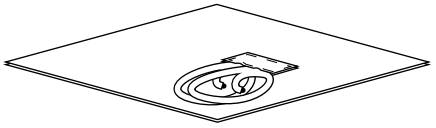

Leads shown exiting middle of heater.

Teflon® leads, UL® style 1180 and cUR® approved, are rated for 392°F (200°C)/300 volts. Any length is available. UL® Teflon® leads are standard on stock rectangles.

Construction

Formed Heaters

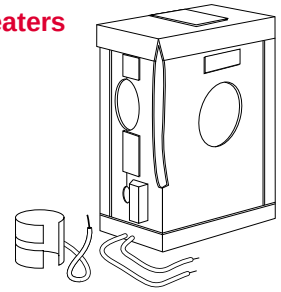

Many three-dimensional shapes, such as cylinders, cones and boxes, can be factory formed. Semi-rigid shapes can be self-gripping to the part. Special tooling may be required for some designs.

Holes, Cutouts and Notches

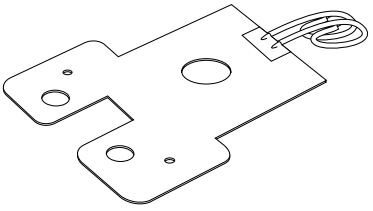

Watlow can provide flexible heaters with special holes, cutouts and notches in nearly any position required for your design. The resistance element can be brought to within ⅛ inch (3 mm) of all edges. Standard spacing is ¼ inch (6 mm) from all edges.

Teflon® is a registered trademark of E.I. du Pont de Nemours & Company.

Flexible Heaters

Flexible Shapes and Geometries

Temperature Sensors

Watlow offers several styles of sensors for use with flexible heaters. These sensors are available as preset or adjustable thermostats, thermocouples, thermistors, RTDs or thermal fuses. They can be integrally mounted (encapsulated in silicone rubber) to sense the temperature of either the part or the heater sheath. The thermostats can also be ordered separate from the heater, allowing direct control of your process temperature, if desired.

Pre-Set Thermostats

Several styles of non-adjustable, pre-set thermostats are available from Watlow. Thermostats separate from the heater are encapsulated in silicone rubber, and are available with standard 12 inch (305 mm) leads unless otherwise specified.

Thermocouples, thermistors, RTDs and thermal fuses are usually mounted to the heater under a vulcanized protective cap of silicone rubber sheath material. This drawing shows a typical mounting style for a thermocouple.

Note: Precise part temperature control with preset thermostats requires prototyping and field testing.

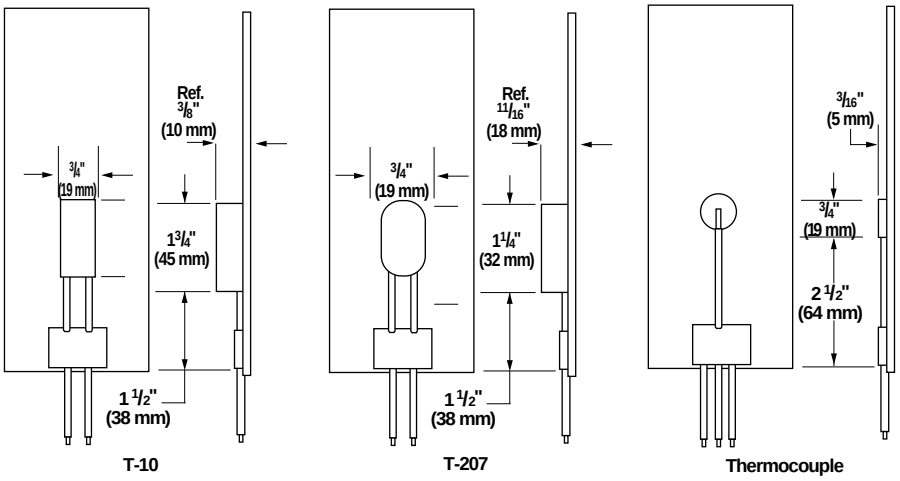

Pre-Set Thermostats (Non-Adjustable)

Thermostat Model	Maximum Watts	Volts AC	Temperature Settings Available °F (°C)	Agency Approvals		
				UR	cUR	VDE
T-10	600/960	120/240	125-300±10 (50-149±5)	yes	yes	yes
T-207	1500	120/240	40/55±8 (4/13±4.4)	yes	yes	yes
	1500	120/240	60/75±8 (16/24±4.4)	yes	yes	yes
	1500	120/240	95/110±8 (35/43±4.4)	yes	yes	yes
	1500	120/240	145/160±8 (63/71±4.4)	yes	yes	yes

Notes:

- When ordering a pre-set thermostat separate from the heater, simply add the prefix **S** to the model number. (Example: ST-10) See next page.
- Snap action preset temperatures on the T-207 are close/open settings.
- T-10 thermostats are manufactured for specific preset temperatures. Available in 25˚F increments.
- Other temperature ranges and voltages are available on special order. Minimum quantities apply, so consult factory before ordering.

Adjustable Thermostats

The B-200 thermostat features a maximum rating of 1500 watts at 120/240V~(ac). The following temperature ranges are available:

- Model B-200-2: 100° to 500°F (40° to 260°C)
- Model B-200-3: 25° to 330°F (-5° to 165°C)

The B-200 thermostat can be integrally mounted to the heater with a bonded protective cap of silicone rubber sheath material.

Flexible Shapes and Geometries

Temperature Sensors
Continued

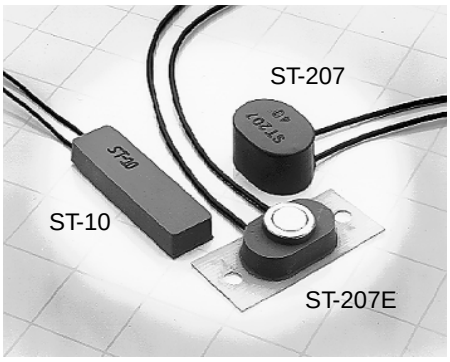

Separate Heater Accessories Available From Stock

Pre-Set Thermostats Separate From Heater

These are offered to allow direct control of your process temperature, so you're not limited to controlling only the heater temperature when using stock heaters. Pre-set thermostats are encapsulated in silicone rubber with standard 12 inch leads.

The same temperature ranges, ratings and sizes are available on these thermostats. When ordering, add "S" prefix to the model number to indicate "separate" item. (Examples: ST-10 and ST-207)

Standard leads are 12 inch (305 mm) 18 ga. UL1180 black leads.

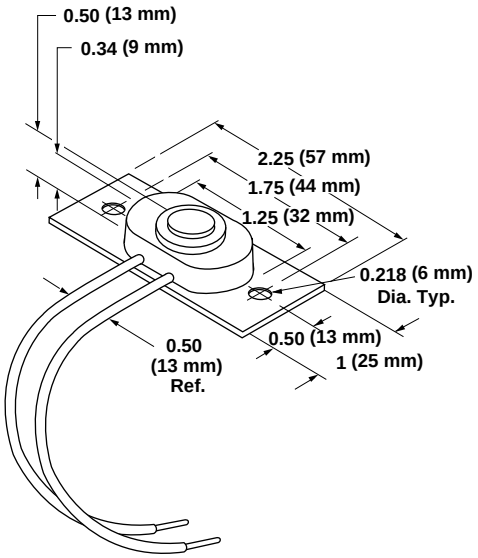

Notes: For direct control of air temperature as is required in enclosure heating applications, specify thermostat model number ST-207E. This is a modified ST-207 mounted on 1/32 inch thick G-10 circuit board with the thermostat's metal cap exposed to sense air temperature.

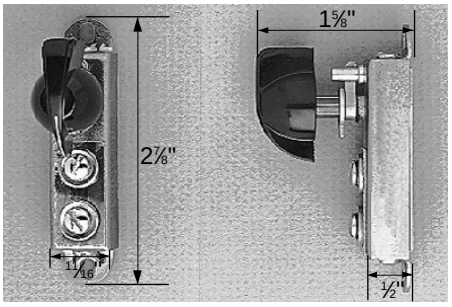

B-200

Adjustable Thermostats Separate From Heater

The Model B-200 adjustable thermostat can be ordered as a separate item. The same model numbers and temperature ranges indicated under *Adjustable Thermostats* are available. When ordering, simply note that you want the **B-200 separate** from the heater.

Quick Ship • *Same day shipment on stock units with orders received by 11:00 a.m.*

Flexible Heaters

Silicone Rubber

Rugged, yet thin, lightweight and flexible … the use of Watlow silicone rubber heaters is limited only by your imagination. With these heaters, you can put the heat where it's needed and, in the process, improve heat transfer, speed warm-ups and decrease wattage requirements.

Fiberglass-reinforced silicone rubber gives your heater dimensional stability without sacrificing flexibility. Because very little material separates the element from the part, heat transfer is rapid and efficient.

Performance Capabilities

- Operating temperatures to 500°F (260°C)
- Watt densities to 80 W/in^2 (12.5 W/cm^2) dependent upon application temperature
- 0.055 inch (1.4 mm) thick with a wire-wound element; only 0.018 inch (0.5 mm) with an etched foil element

Features and Benefits

- **Designed in the exact shape and size**, including 3-D geometries, to conform to your equipment.
- **More than 80 designs** available immediately from stock.
- **UR®, cUR® and VDE** recognitions are available on many designs.
- **Moisture and chemical-resistant** silicone rubber material provides longer heater life.
- **Easy to bond or attach** to your part through the use of vulcanizing, adhesives, or fasteners.

Applications

- Freeze protection and condensation prevention for many types of instrumentation and equipment
- Medical equipment such as blood analyzers, test tube heaters, etc.
- Computer peripherals such as laser printers
- Curing of plastic laminates
- Photo processing equipment

Teflon® is a registered trademark of the E.I. du Pont de Nemours & Company.

UR® and cUR® are registered trademarks of Underwriter's Laboratories, Inc.

Flexible Heaters

Silicone Rubber

Applications and Technical Data

Determining Watt Density

The *Maximum Allowable Watt Density* graph illustrates the maximum recommended heater watt density at various metal part or ambient air temperatures. However, it does not indicate the watt density necessary to achieve a given part temperature. See the *Surface Temperature vs. Time* graph on the next page for assistance with those calculations. When using this graph, remember:

- Part temperature is measured at the point where the heater contacts the metal part.
- Thermostats and on-off controls are typically bimetal or capillary bulb.
- Non-cycling controls are typically solid state, time-proportioning or SCR temperature controllers.
- Watt density values should be derated by one third if insulation is used.
- UL® recognition temperature limits are not detailed.
- Consult Watlow before doing any of the following: selecting high watt density etched-foil elements, or operating heaters with back side insulation or non-metallic parts, which are poor thermal conductors.

Example: A wire-wound heater with non-cycling control at a part temperature of 250°F (120°C) can be rated at 24 W/in² (3.7 W/cm²) maximum. An etched foil heater under the same conditions can be rated at 45 W/in² (7 W/cm²) maximum.

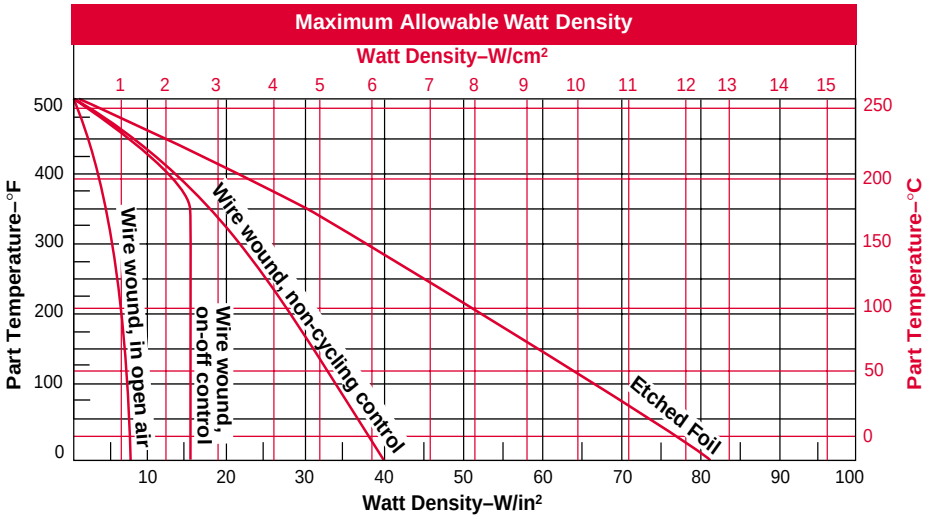

Standard Silicone Rubber Specifications

Maximum width x maximum length:

- Wire wound: 36 x 120 inches (915 mm x 3050 mm)
- Etched foil: 20 x 30 inches (510 mm x 760 mm)

Thickness (standard):

- Wire wound: 0.055 inch (1.4 mm)
- Etched foil: 0.018 inch (0.5 mm)

Weight (standard):

- Wire wound: 8 oz./ft² (0.24 g/cm²)
- Etched foil: 3 oz./ft² (0.09 g/cm²)

Maximum operating temperature: 500°F (260°C)

Maximum temperature for UL® recognition: 428°F (220°C)

Minimum ambient temperature: -80°F (-62°C)

Maximum voltage: 600V~(ac)

Maximum wattage: See watt density graph

Lead size: Sized to load

Lead length: 12 + 1 ½ - ½ inches (305 mm + 40 mm - 15 mm)

Wattage tolerance:

- Wire: ±5 percent
- Foil: +5 percent -10 percent

Dimensional tolerances:

- 0 to 6 inches (0 to 150 mm): ±1/16 inch (1.6 mm)
- 6 to 18 inches (150 to 455 mm): ±⅛ inch (3.2 mm)
- 18 to 36 inches (455 mm to 915 mm): ±3/16 inch (4.8 mm)
- Over 36 inches (915 mm): ±1 percent

Government Supply Code Number
Cage code = 78056

UL® is registered trademark of Underwriter's Laboratories, Inc.

Flexible Heaters

Silicone Rubber

Applications and Technical Data

Continued

Surface Temperature vs. Time

This graph illustrates the surface temperature a silicone rubber heater will reach when the heater is uninsulated and is suspended vertically in 70°F (20°C) still air. This data is based on 0.055 inch (1.4 mm) thick standard construction and is offered as a reference tool.

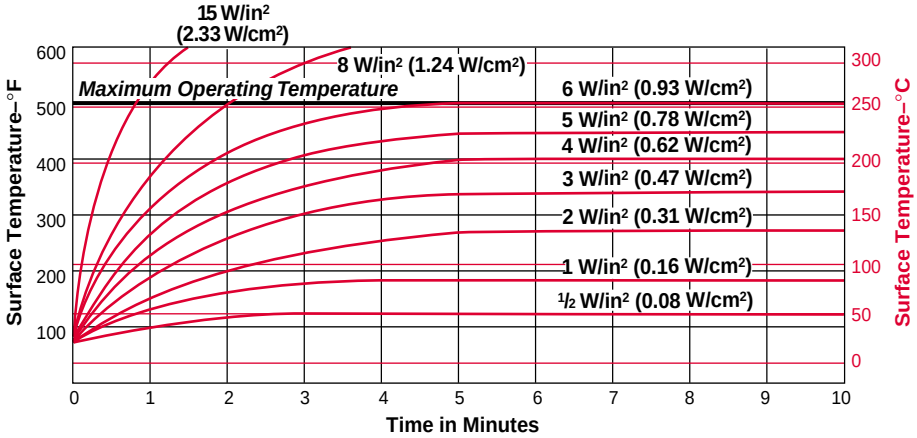

UR®, cUR® and VDE Recognition for Silicone Rubber Heaters

Watlow frequently works with customers requiring agency approvals such as UR®, cUR® and VDE. Many stock silicone rubber heaters are available with one or more of these certifications. **Watlow's technical letter #3**, flexible heaters, provides in-depth information on agency approvals.

UL® Component Recognition (UR) of factory-bonded heaters is available up to 392°F (200°C), and for customer installed heaters up to 428°F (220°C) (UL File No. E52951).

For Canadian recognition Watlow offers **cUR Recognized®** silicone rubber heaters under UL File #E52951. Several constructions are available with ratings to 600V~(ac) and 428°F (220°C) maximum surface temperature. Consult the factory for further information.

VDE Approval is available on several constructions of both wire-wound (File No. 62533) and etched foil (File No. 62535) silicone rubber heaters. The maximum ratings are 440V~(ac) and 428°F (220°C) surface temperature. Under VDE guidelines, minimum installed bend radius is ⅛ inch (3 mm) for etched foil and ¼ inch (6 mm) for wire wound.

VDE also states that the user is responsible for the safe application, installation and wiring of the heaters. Maximum working temperature must be maintained by an appropriate temperature control.

Options

Watlow offers a variety of options such as attachment techniques, thermostats, special leads, holes and cutouts and three-dimensional shapes. These are all described in the introduction to flexible heaters section. In addition, the following option is available only on silicone rubber heaters.

See pages 165 to 168 for more information on options.

Thermal Insulation

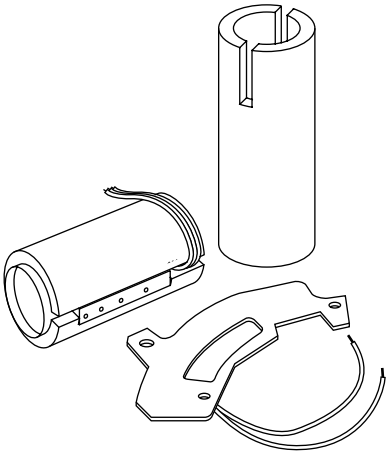

To increase the heating efficiency of your application, silicone rubber heaters can be thermally insulated with silicone sponge rubber, bonded to one side in the following thicknesses: 1/16, ⅛, ¼, ⅜ or ½ inch (1.6, 3, 6, 10 or 13 mm). Heaters with thermal insulation are still quite flexible.

An aluminized surface can be added to the back of the heater to reduce radiated heat losses. This aluminized surface, called "Low Loss Treatment," adds very little to the unit thickness and maintains a very clean appearance.

Silicone Rubber

Wire-Wound Element

Width in (mm)	Length in (mm)	Watts	Availability	120V~(ac) Code No.	240V~(ac) Code No.
1 (25)	2 (50)	10	Stock	**010020C1**	
	3 (75)	15	Stock	**010030C1**	
	4 (100)	20	Stock	**010040C1**	
	5 (125)	25	Stock	**010050C1**	
	5 (125)	25	Stock		**010050C2**
	10 (255)	50	Stock	**010100C1**	
	10 (255)	50	Stock		**010100C2**
	15 (380)	75	Stock	**010150C1**	
	15 (380)	75	Stock		**010150C2**
	20 (510)	100	Stock	**010200C1**	
	20 (510)	100	Stock		**010200C2**
	25 (635)	125	Stock	**010250C1**	
	30 (760)	150	Stock	**010300C1**	
	35 (890)	175	Stock	**010350C1**	
	40 (1015)	200	Stock	**010400C1**	
	80 (2030)	400	Stock	**010800C1**	
	120 (3050)	600	Stock	**010F10C1**①	
2 (50)	2 (50)	20	Stock	**020020C1**	
	5 (125)	50	Stock	**020050C1**	
	5 (125)	50	Stock		**020050C2**
	10 (255)	100	Stock	**020100C1**	
	10 (255)	100	Stock		**020100C2**
	15 (380)	150	Stock	**020150C1**	
	15 (380)	150	Stock		**020150C2**
	20 (510)	200	Stock	**020200C1**	
	20 (510)	200	Stock		**020200C2**
	25 (635)	250	Stock	**020250C1**	
	30 (760)	300	Stock	**020300C1**	
	35 (890)	350	Stock	**020350C1**	
	40 (1015)	400	Stock	**020400C1**	

CONTINUED

① 010**F**10C1 - F = feet (i.e. 10 feet = 120 inches)

Approx. net weight: 8 ounces/ft^2 (0.24 g/cm^2). Standard thickness: 0.055 inch. Standard lead length: 12 inches UL 1180 Teflon®.
Silicone rubber wire-wound elements rated at 5 W/in^2.
UL® Component Recognition (UR®).

How to Order

To order stock silicone rubber heaters, specify the Watlow code number and the quantity. To order a heater with options, specify the code number, quantity and options desired **(see page 165)**. Consult Watlow before combining options.

Made-to-Order: Consult factory.

For **made-to-order** units, Watlow will need the following application information from you:

- Size (dimensions)
- Voltage
- Wattage/watt density
- Operating temperature
- Options (leads, thermostats, attachment techniques, etc.)
- Will heater be subject to flexing?
- Element type, if you have a preference
- Agency approvals
- Quantity

Availability

Stock: Same day shipment of orders received by 11:00 a.m. CST.

Stock with Options: Shipment in five working days or less. Not all options are available with stock heaters.

Flexible Heaters

Silicone Rubber

Wire-Wound Element

Width in (mm)	Length in (mm)	Watts	Availability	120V~(ac) Code No.	240V~(ac) Code No.
3 (75)	3 (75)	45	Stock	**030030C1**	
	5 (125)	75	Stock	**030050C1**	
	5 (125)	75	Stock		**030050C2**
	10 (255)	150	Stock	**030100C1**	
	10 (255)	150	Stock		**030100C2**
	15 (380)	225	Stock	**030150C1**	
	15 (380)	225	Stock		**030150C2**
	20 (510)	300	Stock	**030200C1**	
	20 (510)	300	Stock		**030200C2**
	25 (635)	375	Stock	**030250C1**	
	30 (760)	450	Stock	**030300C1**	
	35 (890)	525	Stock	**030350C1**	
	40 (1015)	600	Stock	**030400C1**	
4 (100)	4 (100)	80	Stock	**040040C1**	
	5 (125)	100	Stock	**040050C1**	
	5 (125)	100	Stock		**040050C2**
	10 (255)	200	Stock	**040100C1**	
	10 (255)	200	Stock		**040100C2**
	15 (380)	300	Stock	**040150C1**	
	15 (380)	300	Stock		**040150C2**
	20 (510)	400	Stock	**040200C1**	
	20 (510)	400	Stock		**040200C2**
	25 (635)	500	Stock	**040250C1**	
	30 (760)	600	Stock	**040300C1**	
	35 (890)	700	Stock	**040350C1**	
	40 (1015)	800	Stock	**040400C1**	
5 (125)	5 (125)	125	Stock	**050050C1**	
	5 (125)	125	Stock		**050050C2**
	10 (255)	250	Stock	**050100C1**	
	10 (255)	250	Stock		**050100C2**
	15 (380)	375	Stock	**050150C1**	
	15 (380)	375	Stock		**050150C2**
	20 (510)	500	Stock	**050200C1**	
	20 (510)	500	Stock		**050200C2**
	25 (635)	625	Stock	**050250C1**	
	30 (760)	750	Stock	**050300C1**	
	35 (890)	875	Stock	**050350C1**	
	40 (1015)	1000	Stock	**050400C1**	
6 (150)	5 (125)	150	Stock	**060050C1**	
	5 (125)	150	Stock		**060050C2**
	10 (255)	300	Stock	**060100C1**	
	10 (255)	300	Stock		**060100C2**
	15 (380)	450	Stock	**060150C1**	
	15 (380)	450	Stock		**060150C2**
	20 (510)	600	Stock	**060200C1**	
	20 (510)	600	Stock		**060200C2**
	25 (635)	750	Stock	**060250C1**	
	30 (760)	900	Stock	**060300C1**	
	35 (889)	1050	Stock	**060350C1**	
	40 (1016)	1200	Stock	**060400C1**	

Approx. net weight: 8 ounces/ft^2 (0.24 g/cm^2). Standard thickness: 0.055 inch. Standard lead length: 12 inches UL 1180 Teflon®.
Silicone rubber wire-wound elements rated at 5 W/in^2. UL® Component Recognition (UR®).

Flexible Heaters

Silicone Rubber

Wire-Wound Stock Heater Coding Configured Options

How to order

To order, complete the code number with the information below:

Wire wound **(p. 172-173)**

0_____- _ _ _ _ _

Modification Options

0 = None
A = PSAS Bottom
B = PSAS Top
E = With Plate. Heater on Side Opposite Flange
F = With Plate. Heater on Flange Side
G = Flaps + Grommets
H = Flaps + Boot Hooks
J = Flaps + Latch Fasteners
K = PSAS and Low Loss
L = Low Loss
M = Low Loss + Flaps + Grommets
N = Low Loss + Flaps + Boot Hooks
P = Low Loss + Flaps + Latch Fasteners
R = 1/16 inch Sponge
S = ⅛ inch Sponge
T = ¼ inch Sponge
U = ⅜ inch Sponge
V = ½ inch Sponge
W = PSAS + 1/16 inch Sponge
Y = PSAS + ⅛ inch Sponge
1 = PSAS + ¼ inch Sponge
2 = PSAS + ⅜ inch Sponge
3 = PSAS + ½ inch Sponge
4 = Tip Plugs
6 = Tip Plugs/PSAS

- Heaters with flaps must be minimum 10 inches long.

Sensors

	Type	LOC	WIR
0 =	None		
L =	T10	STD	STD
M =	T10	STD	ALT
N =	T10	ALT	STD
P =	T10	ALT	ALT
R =	T207	STD	STD
S =	T207	STD	ALT
T =	T207	ALT	STD
U =	T207	ALT	ALT
V =	T207E	on heater	STD
W =	T207E	Remote	STD
Y =	B200	STD	STD
1 =	B200	STD	ALT
2 =	B200	ALT	STD
3 =	B200	ALT	ALT
4 =	JSTD	STD	STD
6 =	JALT	STD	STD
7 =	KSTD	STD	STD

- For thermostats, standard location is as shown in catalog; standard wiring is integral or series with the heater; alternate location is rotated parallel with heater width; alternate wiring is separate leads for pilot control.
- For thermocouples, J standard is Teflon® insulation; J alternate is fiberglass insulation; K standard is fiberglass insulation.

T10 Set °F*

0 = None
A = 125
B = 150
E = 175
F = 200
G = 225
H = 250
J = 275
K = 300

T207 Set °F*

0 = None
1 = 40/55
2 = 60/75
3 = 95/110
4 = 145/1600

B200 Set °F*

0 = None
2 = 500
3 = 330

T/C Length

0 = None
A = 8 in
B = 12 in
E = 18 in
F = 24 in
G = 30 in
H = 36 in
J = 40 in
K = 4 ft
L = 5 ft
M = 6 ft
N = 7 ft
P = 8 ft
R = 9 ft
S = 10 ft
T = 12 ft
U = 15 ft
V = 18 ft
W = 20 ft
Y = 22 ft
1 = 25 ft
2 = 30 ft

* For all thermostats, the heater must be two inches minimum width and five inches minimum length.

Lead Insulation

0 = None
1 = 1180 Teflon®
2 = 1180 cUR®
3 = 3133 22 GA
4 = 3134 18 GA
6 = 1199 cUR®
7 = HPN
8 = 6 foot HPN Set
9 = Type E Teflon®
A = 1180VDE*
B = 1199VDE*

* 1180VDE denotes a cUR® heater plus a VDE stamp.

Lead Length

A = 8 in
B = 12 in
E = 18 in
F = 24 in
G = 30 in
H = 36 in
J = 40 in
K = 4 ft
L = 5 ft
M = 6 ft
N = 7 ft
P = 8 ft
R = 9 ft
S = 10 ft
T = 12 ft
U = 15 ft
V = 18 ft
W = 20 ft
Y = 22 ft
1 = 25 ft
2 = 30 ft

Availability:
Modified Stock: Shipment within five working days

Flexible Heaters

Silicone Rubber

Etched Foil Element

Width in (mm)	Length in (mm)	Watts	W/in² (W/cm²)	Availability	120V~(ac) Code No.	120/240V~(ac) Code No.
1 (25)	5 (125)	25	5 (0.8)	Stock	**F010050C3**	
	5 (125)	50	10 (1.6)	Stock	**F010050C7**	
	5 (125)	12.5/50	2.5/10 (0.4/1.6)	Stock		**F010050C8**
	10 (255)	100	10 (1.6)	Stock	**F010100C7**	
	10 (255)	25/100	2.5/10 (0.4/1.6)	Stock		**F010100C8**
	15 (380)	150	10 (1.6)	Stock	**F010150C7**	
	15 (380)	37.5/150	2.5/10 (0.4/1.6)	Stock		**F010150C8**
	20 (510)	200	10 (1.6)	Stock	**F010200C7**	
	20 (510)	50/200	2.5/10 (0.4/1.6)	Stock		**F010200C8**
2 (50)	5 (125)	100	10 (1.6)	Stock	**F020050C7**	
	5 (125)	25/100	2.5 /10 (0.4/1.6)	Stock		**F020050C8**
	10 (255)	200	10 (1.6)	Stock	**F020100C7**	
	10 (255)	50/200	2.5 /10 (0.4/1.6)	Stock		**F020100C8**
	15 (380)	300	10 (1.6)	Stock	**F020150C7**	
	15 (380)	75/300	2.5/10 (0.4/1.6)	Stock		**F020150C8**
	20 (510)	400	10 (1.6)	Stock	**F020200C7**	
	20 (510)	100/400	2.5/10 (0.4/1.6)	Stock		**F020200C8**
3 (75)	5 (125)	75	5 (0.8)	Stock	**F030050C3**	
	5 (125)	150	10 (1.6)	Stock	**F030050C7**	
	5 (125)	37.5/150	2.5 /10 (0.4/1.6)	Stock		**F030050C8**
	10 (255)	300	10 (1.6)	Stock	**F030100C7**	
	10 (255)	75/300	2.5 /10 (0.4/1.6)	Stock		**F030100C8**
	15 (380)	450	10 (1.6)	Stock	**F030150C7**	
	15 (380)	112/450	2.5 /10 (0.4/1.6)	Stock		**F030150C8**
	20 (510)	600	10 (1.6)	Stock	**F030200C7**	
	20 (510)	150/600	2.5 /10 (0.4/1.6)	Stock		**F030200C8**
4 (100)	5 (125)	200	10 (1.6)	Stock	**F040050C7**	
	5 (125)	50/200	2.5 /10 (0.4/1.6)	Stock		**F040050C8**
	10 (255)	400	10 (1.6)	Stock	**F040100C7**	
	10 (255)	100/400	2.5 /10 (0.4/1.6)	Stock		**F040100C8**
	15 (380)	600	10 (1.6)	Stock	**F040150C7**	
	15 (380)	150/600	2.5/10 (0.4/1.6)	Stock		**F040150C8**
	20 (510)	800	10 (1.6)	Stock	**F040200C7**	
	20 (510)	200/800	2.5/10 (0.4/1.6)	Stock		**F040200C8**
5 (125)	5 (125)	125	5 (0.8)	Stock	**F050050C3**	
	5 (125)	250	10 (1.6)	Stock	**F050050C7**	
	5 (125)	62.5/250	2.5/10 (0.4/1.6)	Stock		**F050050C8**
	10 (255)	500	10 (1.6)	Stock	**F050100C7**	
	10 (255)	125/500	2.5/10 (0.4/1.6)	Stock		**F050100C8**
	15 (380)	750	10 (1.6)	Stock	**F050150C7**	
	15 (380)	187/750	2.5/10 (0.4/1.6)	Stock		**F050150C8**
	20 (510)	1000	10 (1.6)	Stock	**F050200C7**	
	20 (510)	250/1000	2.5/10 (0.4/1.6)	Stock		**F050200C8**
6 (150)	5 (125)	300	10 (1.6)	Stock	**F060050C7**	
	5 (125)	75/300	2.5/10 (0.4/1.6)	Stock		**F060050C8**
	10 (255)	600	10 (1.6)	Stock	**F060100C7**	
	10 (255)	150/600	2.5 /10 (0.4/1.6)	Stock		**F060100C8**
	15 (380)	900	10 (1.6)	Stock	**F060150C7**	
	15 (380)	225/900	2.5/10 (0.4/1.6)	Stock		**F060150C8**
	20 (510)	1200	10 (1.6)	Stock	**F060200C7**	
	20 (510)	300/1200	2.5/10 (0.4/1.6)	Stock		**F060200C8**

Approx. net weight: 3 ounces/ft² (0.09 g/cm²). Standard lead length: 12 inches UL 1180 Teflon®.
Silicone rubber etched foil elements are 0.018 inch thick.
UL® Component Recognition (UR®).

Flexible Heaters

Silicone Rubber

Etched Foil Stock Heater Coding Configured Options

How to order

To order, complete the code number with the information below:

Etched Foil (p. 175)

F0_____- _ _ _ _ _

Options
0 = None
A = PSAS Bottom
B = PSAS Top
K = PSAS and Low Loss
L = Low Loss
R = 1/16 inch Sponge
S = 1/8 inch Sponge
T = 1/4 inch Sponge
U = 3/8 inch Sponge
V = 1/2 inch Sponge
W = PSAS + 1/16 inch Sponge
Y = PSAS + 1/8 inch Sponge
1 = PSAS + 1/4 inch Sponge
2 = PSAS + 3/8 inch Sponge
3 = PSAS + 1/2 inch Sponge
4 = Tip Plugs
6 = Tip Plugs/PSAS

- Etched foil heaters not recommended for enclosure heaters.

Sensors

Type	LOC	WIR
0 = None		
L = T10	STD	STD
M = T10	STD	ALT
N = T10	ALT	STD
P = T10	ALT	ALT
R = T207	STD	STD
S = T207	STD	ALT
T = T207	ALT	STD
U = T207	ALT	ALT
4 = JSTD	STD	STD
6 = JALT	STD	STD
7 = KSTD	STD	STD

- For thermostats, standard location is as shown in catalog; standard wiring is integral or series with the heater; alternate location is rotated parallel with heater width; alternate wiring is separate leads for pilot control.
- For thermocouples, J standard is Teflon® insulation; J alternate is fiberglass insulation; K standard is fiberglass insulation.

T10 Set °F*
0 = None
A = 125
B = 150
E = 175
F = 200
G = 225
H = 250
J = 275
K = 300

T207 Set °F*
0 = None
1 = 40/55
2 = 60/75
3 = 95/110
4 = 145/160

T/C Length
0 = None
A = 8 in
B = 12 in
E = 18 in
F = 24 in
G = 30 in
H = 36 in
J = 40 in
K = 4 ft
L = 5 ft
M = 6 ft
N = 7 ft
P = 8 ft
R = 9 ft
S = 10 ft
T = 12 ft
U = 15 ft
V = 18 ft
W = 20 ft
Y = 22 ft
1 = 25 ft
2 = 30 ft

* For preset thermostats, the heater must be two inches minimum width and five inches minimum length.

Lead Insulation
0 = None
1 = 1180 Teflon®
2 = 1180 cUR®
3 = 3133 22 GA
4 = 3134 18 GA
6 = 1199 cUR®
7 = HPN
8 = 6 Foot HPN Set
9 = Type E Teflon®
A = 1180VDE*
B = 1199VDE*

*1180VDE denotes a cUR® heater plus a VDE stamp.

Lead Length
A = 8 in
B = 12 in
E = 18 in
F = 24 in
G = 30 in
H = 36 in
J = 40 in
K = 4 ft
L = 5 ft
M = 6 ft
N = 7 ft
P = 8 ft
R = 9 ft
S = 10 ft
T = 12 ft
U = 15 ft
V = 18 ft
W = 20 ft
Y = 22 ft
1 = 25 ft
2 = 30 ft

Availability:
Modified Stock: Shipment within five working days

Flexible Heaters

Silicone Rubber

Stock Product Offering

Enclosure Heaters–
Wire-Wound Only

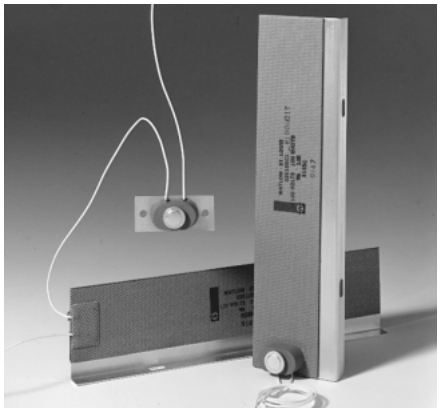

Designed for freeze and condensation protection, Watlow's enclosure heaters are rugged, reliable and safe to operate. These rectangular-shaped, wire-wound silicone rubber heaters can be ordered by themselves with adhesive or vulcanized to an aluminum mounting plate. A thermostat can be attached to the heater or mounted separately. Pictured are units with thermostat on heater in foreground and heater with remote thermostat in background.

Performance Capabilities

- Watt density rating of 5 W/in^2 (0.8 W/cm^2)
- Temperatures to 150°F (66°C)

Features and Benefits

- **Easy to install** with options of pressure sensitive adhesive, mounting to aluminum plate, or customer cementing.
- **Quick delivery** on more than 72 variations.
- **Safe and reliable operation** due to no exposed electrical connections.
- **Custom leads** available in any length needed.
- **Horizontal and vertical mounting** options to meet your needs.

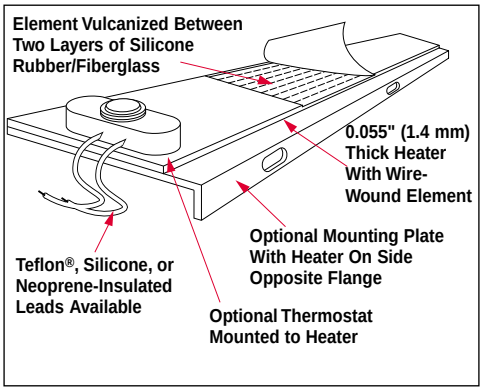

Applications

Freeze or condensation prevention in housings containing electronic equipment. Examples include:

- Traffic signal boxes
- Automatic teller machines
- Temperature control panels
- Gas or liquid control valve housings

Applications and Technical Data

Determining Minimum Wattage Requirements For Enclosures

This chart is an excellent guide for determining total wattage requirements for both insulated and uninsulated enclosures, assuming the box is relatively airtight. For windy conditions, add an additional 50 percent to the wattage requirement listed.

Temperature Rise from Ambient °F (°C)	Total Enclosure Surface Area—Square Feet (Square Meters)													
	2 (0.2)	3 (0.3)	4 (0.4)	5 (0.5)	6 (0.6)	7.5 (0.7)	9 (0.8)	10 (0.9)	15 (1.4)	20 (1.9)	25 (2.3)	30 (2.8)	40 (3.7)	50 (4.7)
20 (11)	30	40	55	70	80	100	120	135	205	270	335	405	540	670
	10	10	15	20	20	25	30	35	50	65	80	100	130	160
40 (22)	55	80	110	135	160	200	245	270	405	540	670	805	1075	1340
	15	20	30	35	40	50	60	65	100	130	160	195	260	320
60 (33)	90	120	160	205	245	300	365	405	605	805	1005	1210	1610	2010
	20	30	55	50	60	75	90	100	145	195	240	290	385	480
80 (44)	110	160	215	270	325	400	485	540	805	1075	1340	1610	2145	2680
	30	40	55	65	80	100	115	130	195	260	320	385	515	640
100 (56)	135	200	270	335	405	500	605	670	1005	1340	1675	2010	2680	3350
	35	50	65	80	100	125	145	160	240	320	400	480	640	800
120 (67)	165	240	320	405	485	600	725	805	1210	1610	2010	2415	3220	4020
	40	60	80	100	115	150	175	195	290	385	480	580	770	960
140 (78)	190	280	375	470	565	700	845	940	1410	1880	2345	2815	3755	4690
	45	70	90	115	135	175	205	225	340	450	560	675	900	1120

Uninsulated boxes Insulated boxes

Silicone Rubber

Stock Product Offering

Enclosure Heaters

Options

Aluminum Mounting Plate

Both vertical and horizontal mounting can be accomplished with enclosure heaters. The mounting plates are 0.040 inch (1 mm) thick, specified as #3003 H14 aluminum. The preferred orientation is vertical, with a thermostat attached at the lower end (as shown in the drawing).

For horizontal mounting, a remote thermostat is recommended. An enclosure heater can be ordered by itself, with PSAS or vulcanized to an aluminum mounting plate. See *Thermostats* below for more information.

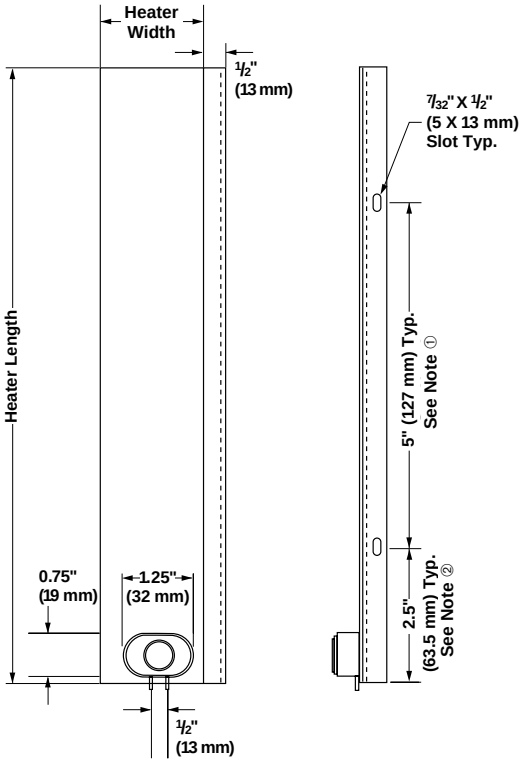

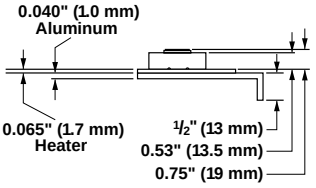

① 4.0 inches (102 mm) on 5 inch unit.
② 0.50 inch (12.7 mm) on 5 inch unit.

Thermostats

Mounted on Heater

Built-in snap action thermostats from Watlow are designed to sense air temperature. See the ordering chart on the following page for available settings.

Remote From Heater

For an air sensing thermostat separate from the heater, the ST-207E is ideal. This is a modified ST-207 mounted on a 1/32 inch (0.8 mm) thick G-10 circuit board with the thermostat's metal cap exposed to sense air temperature. The thermostat is placed at the midpoint of the lead length. The sensor can be preset at the temperatures listed for integral sensors. For more information, turn to **pages 167-168**.

Notes:

- On both integral and remote sensors, the thermostat's exposed metal cap is vulnerable to impact. This could defeat the thermostat's switching action and cause heater malfunction.
- T-10 thermostats are not recommended for enclosure heating applications.

Flexible Heaters

Silicone Rubber

Stock Product Offering

Drum Heaters

Performance Capabilities

- Available with fixed or adjustable thermostats for temperatures up to 330°F (165°C)
- Watt density of 6 W/in^2 (1 W/cm^2)

Features and Benefits

- **Protects fluids** stored in drums from freezing temperatures.
- **Quick delivery** on 28 styles from stock.
- **Six-foot cord and plug set** included for convenient use.
- **Quick installation** with easy operating latch fasteners.
- **Custom heaters** available for non-standard sizes.

Applications

- Freeze protection
- Viscosity control

Application Hints

- Allow a three-inch (76 mm) gap between heater ends when clamped around a drum.
- Heaters with thermostat settings of 40°F and 60°F (4°C and 16°C) will have open circuit readings if room temperature exceeds the thermostat settings.
- Heaters cannot be bench tested since the thermostat is located over a no-heat section of the heater. Accurate testing of the heater requires it to be placed over the drum which is to be heated.
- When a single heater is used, place the heater at the bottom of the drum to minimize stratification.

Standard Features

Watlow flexible drum heaters are designed for use on 5-, 30-, and 55-gallon **metal** drums. They come with the following standard features:

- Six-foot (1.8 m) cord and plug set
- Latch fasteners and springs
- Two styles of thermostats:

  T-207 snap action, available on all sizes

  B-200-3 adjustable, available only on four-inch (100 mm) wide units, and mounted in a silicone rubber boot to protect it from contamination

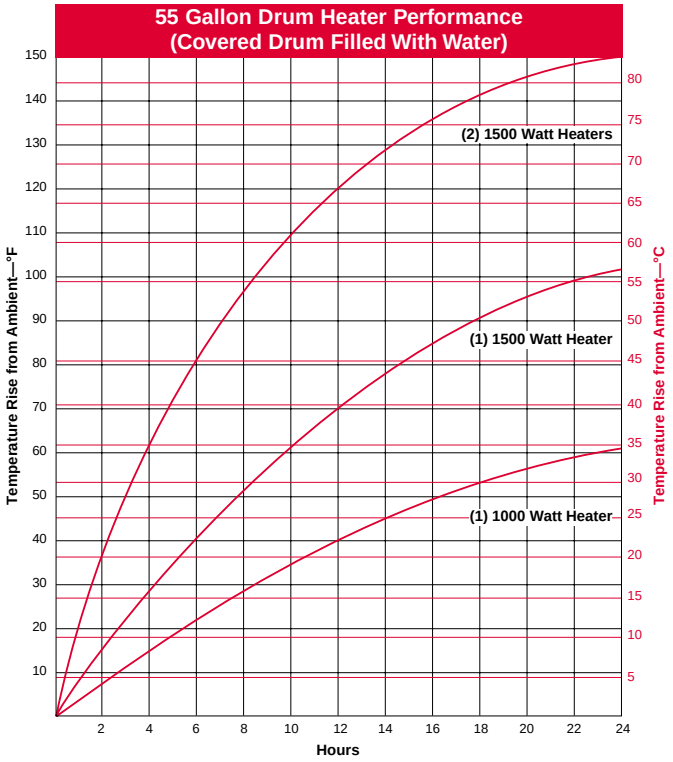

Determining Temperature Rise From Ambient

The total wattage (number of heaters and the material being heated) must be considered when estimating the actual temperature the contents of the drum will reach. The graph above shows the temperature rise from ambient conditions, not drum content temperature.

For more information on thermostats, turn to pages 167 to 168.

Flexible Heaters

F.O.B.: Columbia, Missouri

Silicone Rubber

Stock Product Offering

Drum Heaters

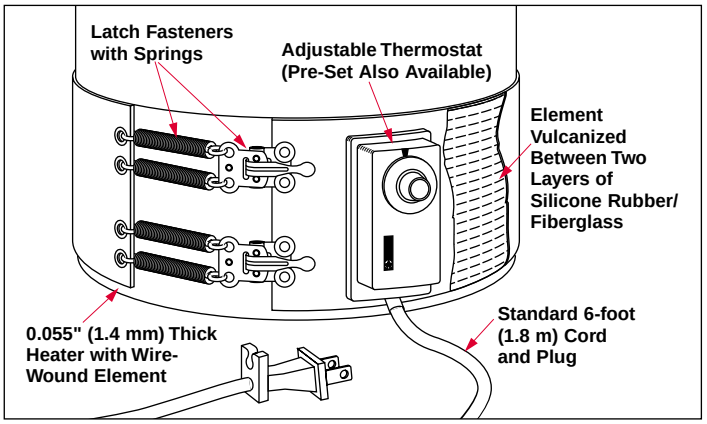

Drum Size	Volts	Watts	Width inches (mm)	Thermostat	Availability	Code No.
5 gal. (20 L) 11 ½ in. (290 mm) nom. diameter	120	650	4 (100)	(no thermostat)	Stock	**04031500A**
				150°F (66°C)	Modified Stock	**04031500BT**
				100°F (38°C)	Modified Stock	**04031500CT**
				40°F (4°C)	Modified Stock	**04031500DT**
				60°F (16°C)	Modified Stock	**04031500HT**
				Adj. 25°-330°F (-5°-165°C)	Stock	**04031510**
30 gal. (115 L) 18 ½ in. (470 mm) nom. diameter	120	750	2 11/16 (70)	(no thermostat)	Stock	**02655080A**
				150°F (66°C)	Modified Stock	**02655080BT**
				100°F (38°C)	Modified Stock	**02655080CT**
				40°F (4°C)	Modified Stock	**02655080DT**
				60°F (16°C)	Modified Stock	**02655080ET**
55 gal. (210 L) 22 ½ in. (570 mm) nom. diameter	120	1000	2 11/16 (70)	(no thermostat)	Stock	**02667700A**
				150°F (66°C)	Modified Stock	**02667700BT**
				100°F (38°C)	Modified Stock	**02667700CT**
				40°F (4°C)	Modified Stock	**02667700DT**
				60°F (16°C)	Modified Stock	**02667700ET**
55 gal. (210 L) 22 ½ in. (570 mm) nom. diameter	120	1500	4 (100)	(no thermostat)	Stock	**04067700A**
				150°F (66°C)	Modified Stock	**04067700BT**
				100°F (38°C)	Modified Stock	**04067700CT**
				40°F (4°C)	Modified Stock	**04067700DT**
				60°F (16°C)	Modified Stock	**04067700GT**
				Adj.25°-330°F (-5°-165°C)	Stock	**04067710**
55 gal. (210 L) 22 ½ in. (570 mm) nom. diameter	①240	1500	4 (100)	(no thermostat)	Stock	**04067701A**
				150°F (66°C)	Modified Stock	**04067701BT**
				100°F (38°C)	Modified Stock	**04067701CT**
				40°F (4°C)	Modified Stock	**04067701DT**
				60°F (16°C)	Modified Stock	**04067701ET**
				Adj.25°-330°F (-5°-165°C)	Stock	**04067711**

① Supplied with 6-foot (1.8 m) cord—no plug.

How to Order

After determining the drum size, volts, watts and temperature sensing requirements, specify the corresponding Watlow code number and quantity desired.

Availability

Stock: Drum heaters without thermostats and those with adjustable thermostats are available for same day shipment if order is received by 11:00 a.m. CST.

Modified Stock: Drum heaters with pre-set thermostats require two to three days lead time before being shipped.

Made-to-Order: Consult factory

Flexible Heaters

Silicone Rubber

Stock Product Offering

PVC Wirewound Conduit Heaters

Watlow's conduit heater simplifies bending PVC plastic conduit to the desired shape right on the job site. Just plug it in and within four to 18 minutes—depending upon heater size—the conduit is ready to be formed by hand into the shape or radius you need.

This lightweight silicone rubber heater is easily wrapped around the conduit because of its flexible, self-conforming construction.

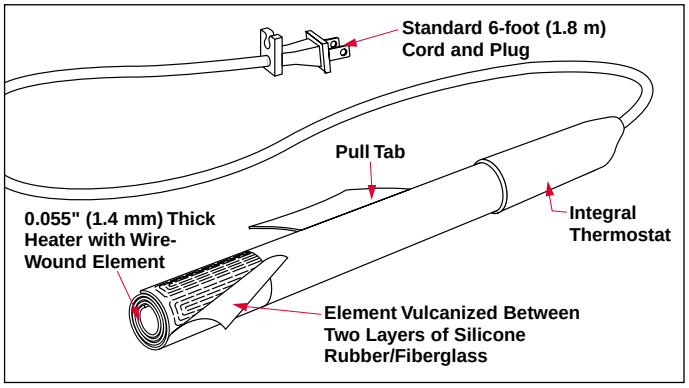

Performance Capabilities

- Operating temperatures to 250°F (121°C)
- Handles plastic conduits as large as four inches (100 mm) in diameter

Features and Benefits

- **Self-conforming** to cylindrical shapes for a snug fit around the conduit.
- **Portable design** for easy use in the field.
- **Thermostat provided** to protect from overheating.
- **Pull tab** allows easy removal or positioning when the heater is hot.
- **Available for immediate delivery** from stock.

F.O.B.: Columbia, Missouri

Conduit Diameter in. (mm)	Length in. (mm)	Watts	Volts	Temp. Limit °F (°C)	Warm-up Time	Code No.
½ to 1 ½ (15-40)	12 (300)	180	120	250 (121)	4-10 minutes	**05712082**
2 to 4 (50-100)	25 (635)	950	120	250 (121)	7-18 minutes	**14825081**

How To Order

Choose between the two sizes available. Specify the Watlow code number and quantity desired.

Availability

Stock: Both sizes are available for immediate delivery from stock.

Made-to-Order: Consult factory

Flexible Heaters

F.O.B.: Anaheim, California

Silicone Rubber

Stock Product Offering

Composite Flexible Stock Heaters

The composite bonding industry is a large field that is expanding into a variety of areas. One of the primary fields that utilize flexible heaters for curing is the aerospace industry. Watlow offers a stock list of heaters commonly used for composite bonding and curing. The design includes equal length circuits and a no-heat tab for temperature uniformity. Also, the contact surface is made of a smooth silicone to prevent composite surface imperfections. The heaters are fiberglass reinforced to provide lasting field service durability and life.

Features and Benefits

- Standard 5 W/in^2
- 120V~(ac) (standard)/ 240V~(ac) (option) single phase
- Customized leads
- Field service ease
- Equal length circuits— minimum 2 inch x 2 inch tab w/radius
- Smooth contact surface
- UL® recognized

Applications

- Aerospace industry
  - Repair
  - Fabrication
- Composite bonding processes

Heat Mapping Certification

Heat mapping certification is available on customer request at an additional charge.

- ±10°F conformity
- Serialized and records maintained five years minimum

Availability

- **Stock**: 24 hours
- **Heat mapping**: One week
- **Made-to-Order:** Two weeks — a net set-up charge will be applied

UL® is a registered trademark of Underwriter's Laboratories, Inc.

Size in.	Size (mm)	Code Number
6 x 6	(180)	**L060080509S**
6 x 10	(300)	**L060120510S**
8 x 8	(320)	**L080100505S**
8 x 12	(480)	**L080140501S**
10 x 10	(500)	**L100120506S**
10 x 12	(600)	**L100140501S**
10 x 18	(900)	**L100200503S**

Size in.	Size (mm)	Code Number
12 x 12	(700)	**L120140510S**
12 x 18	(1080)	**L120200506S**
12 x 24	(1440)	**L120260504S**
16 x 16	(1280)	**L160180502S**
18 x 18	(1620)	**L180200502S**
20 x 20	(2000)	**L200220501S**

Flexible Heaters

NEW PRODUCT

Silicone Rubber

Modular Gas Line Heaters

Gas Delivery

TEOS, BCl_3, $AlCl_3$, ClF_3 and DCS are gases that condense or liquefy due to a phase shift at low temperatures. The condensation occurs in the gas line and puddles in the shower head before being injected into the vacuum chamber. A substantial number of wafer defects will occur if liquefied gases are injected into the vacuum chamber. Uniform heating of the lines will prevent condensation. TEOS lines are typically heated above 194°F (90°C) and BCl_3 above 86°F (30°C), depending on pressure and flow rate. The optimum line temperature will vary depending on the process parameters.

Specifications

- Watt density: 2.5 W/in^2 (0.39 W/cm^2) on gas line O.D.
- UL® recognized for U.S. and Canadian safety standards
- Heaters and insulators meet UL94-HB flammability requirements
- Insulated straight fillers for 100 percent line coverage—elbows and tees are trim-to-fit to proper length
- I.D. available: ¼, ⅜, ½, ¾ inch (6, 10, 13, 19 mm)
- 120V standard, other voltages available

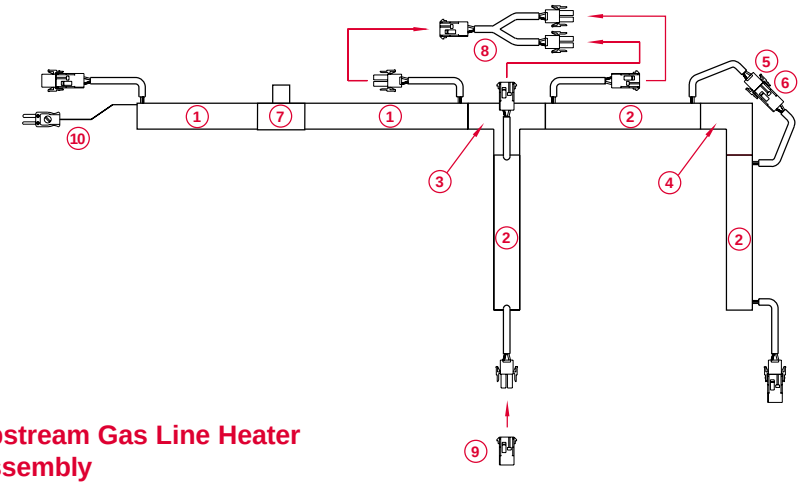

Upstream Gas Line Heater Assembly

1. 9 inch (229 mm) heater with thermocouple. Heater leads have male plug on one end and a female cap on the other end. Heater materials UL® rated to 392°F (200°C).
2. 6 inch (152 mm) heater. Heater leads, see 1.
3. Union tee insulator.
4. 90° union elbow insulator.
5. Male plug, amp p/n 1-480698-0 w/ sockets amp p/n 350689-1.
6. Female cap, amp p/n 1-480699-0 w/ pins amp p/n 350690-1.
7. Valve or regulator.
8. Y Connector: one female cap on one end; two male plugs on the other end.
9. Dead plug (sealed).
10. Type J thermocouple w/ male mini-plug (optional).
11. High-temp plastic snaps 212°F (100°C).
12. ⅜ inch (10 mm) wall, silicone rubber, closed cell sponge.

Flexible Heaters

Silicone Rubber

Modular Gas Line Heaters

Standard Gas Line Diameter

¼ Inch (6 mm) O.D. Tubing (Stock)

¼ Inch (6 mm) Heater I.D. x Length inches	(mm)	Description	Volts	Watts	Amps	Watlow Code Number without T/C	Watlow Code Number with Type J T/C
6	(152)	Heated straight	120	12	0.10	**008060C1**	**008060C1A**
9	(229)	Heated straight	120	18	0.15	**008090C1**	**008090C1A**
12	(305)	Heated straight	120	24	0.20	**008120C1**	**008120C1A**
18	(457)	Heated straight	120	36	0.30	**008180C1**	**008180C1A**
24	(610)	Heated straight	120	48	0.40	**008240C1**	**008240C1A**
36	(914)	Heated straight	120	72	0.60	**008360C1**	**008360C1A**
18	(457)	Straight insulator	N/A	Trim-to-fit	Insulator	**008180C0**	
* Elbow		90° Union Elbow insulator	N/A	Trim-to-fit	Insulator	**008020C0**	
* T		Union Tee insulator	N/A	Trim-to-fit	Insulator	**008030C0**	

⅜ Inch (10 mm) O.D. Tubing

⅜ Inch (6 mm) Heater I.D. x Length inches	(mm)	Description	Volts	Watts	Amps	Watlow Code Number without T/C	Watlow Code Number with Type J T/C
6	(152)	Heated straight	120	18	0.15	**012060C1**	**012060C1A**
9	(229)	Heated straight	120	27	0.23	**012090C1**	**012090C1A**
12	(305)	Heated straight	120	36	0.30	**012120C1**	**012120C1A**
18	(457)	Heated straight	120	54	0.45	**012180C1**	**012180C1A**
24	(610)	Heated straight	120	71	0.60	**012240C1**	**012240C1A**
36	(914)	Heated straight	120	107	0.90	**012360C1**	**012360C1A**
18	(457)	Straight insulator	N/A	Trim-to-fit	Insulator	**012180C0**	
* Elbow		90° Union Elbow insulator	N/A	Trim-to-fit	Insulator	**012020C0**	
* T		Union Tee insulator	N/A	Trim-to-fit	Insulator	**012030C0**	

½ Inch (13 mm) O.D. Tubing (Stock)

½ Inch (6 mm) Heater I.D. x Length inches	(mm)	Description	Volts	Watts	Amps	Watlow Code Number without T/C	Watlow Code Number with Type J T/C
6	(152)	Heated straight	120	24	0.20	**016060C1**	**016060C1A**
9	(229)	Heated straight	120	36	0.30	**016090C1**	**016090C1A**
12	(305)	Heated straight	120	48	0.40	**016120C1**	**016120C1A**
18	(457)	Heated straight	120	72	0.60	**016180C1**	**016180C1A**
24	(610)	Heated straight	120	96	0.80	**016240C1**	**016240C1A**
36	(914)	Heated straight	120	144	1.20	**016360C1**	**016360C1A**
18	(457)	Straight insulator	N/A	Trim-to-fit	Insulator	**016180C0**	
* Elbow		90° Union Elbow insulator	N/A	Trim-to-fit	Insulator	**016020C0**	
* T		Union Tee insulator	N/A	Trim-to-fit	Insulator	**016030C0**	

* For use on Micro-Fit® weld fittings.
Micro-Fit® is a registered trademark of CAJON Company, A SWAGELOK® Company.

Flexible Heaters

Silicone Rubber

Modular Gas Line Heaters

Standard Gas Line Diameter
¾ Inch (19 mm) O.D. Tubing

¾ Inch (19 mm) Heater I.D. x Length inches	(mm)	Description	Volts	Watts	Amps	Watlow Code Number without T/C	Watlow Code Number with Type J T/C
6	(152)	Heated straight	120	36	0.30	**024060C1**	**024060C1A**
9	(229)	Heated straight	120	54	0.45	**024090C1**	**024090C1A**
12	(305)	Heated straight	120	71	0.60	**024120C1**	**024120C1A**
18	(457)	Heated straight	120	107	0.90	**024180C1**	**024180C1A**
24	(610)	Heated straight	120	142	1.19	**024240C1**	**024240C1A**
36	(914)	Heated straight	120	213	1.78	**024360C1**	**024360C1A**
18	(457)	Straight insulator	N/A	Trim-to-fit	Insulator	**024180C0**	
* Elbow		90° Union Elbow insulator	N/A	Trim-to-fit	Insulator	**024020C0**	
* T		Union Tee insulator	N/A	Trim-to-fit	Insulator	**024030C0**	

Standard Designs
VCR Union Heaters/Insulators

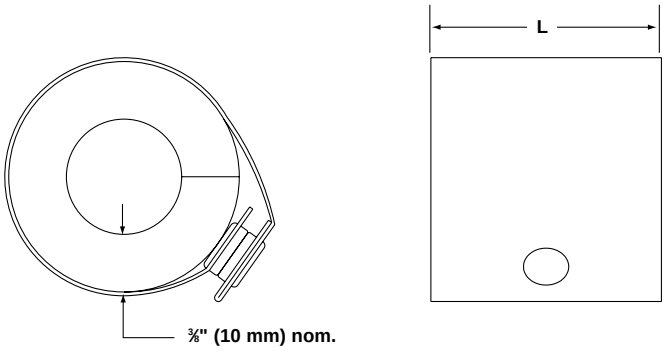

I.D. x Length inches	(mm)	Description	Volts	Watts	Amps	Watlow Code Number without T/C	Watlow Code Number with Type J T/C
⅞ x 1¾	(22 x 44)	¼" (6 mm) VCR Union heater	120	10	0.09	**01702783**	**01702783A**
¾ x 1½	(19 x 38)	¼" (6 mm) VCR Union insulator	N/A	N/A	N/A	**02401580**	N/A
1¼ x 1½	(32 x 38)	½" (13 mm) VCR Union heater	120	12	0.10	**03901581**	**0301581A**
1¼ x 1½	(32 x 38)	½" (13 mm) VCR Union insulator	N/A	N/A	N/A	**03901580**	N/A

Flexible Heaters

Silicone Rubber

Modular Gas Line Heaters

VCR Valve Heaters

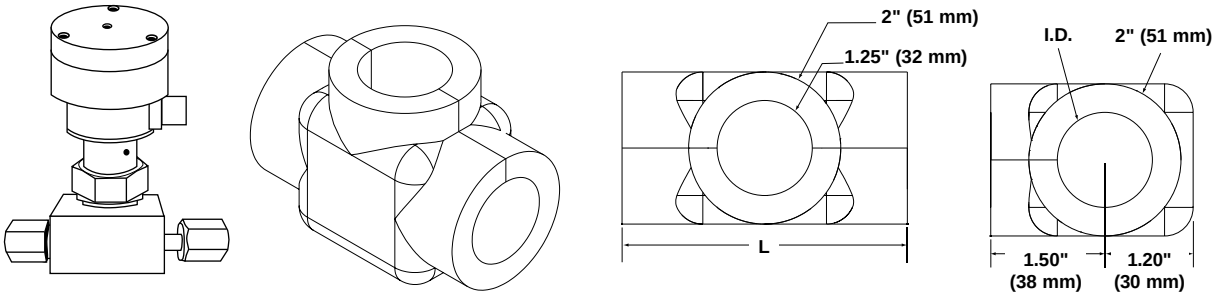

Tube Diameter inch	(mm)	I.D. inch	(mm)	Fitting Type	Length inches	(mm)	Watts	Amps @ 120V	Watlow Code Number
¼	(6)	⅞	(22)	Male VCR Valve heater	3.00	(76)	18	0.15	**03104786**
¼	(6)	⅞	(22)	Female VCR Valve heater	4.75	(121)	28	0.24	**04704893**
½	(13)	1 ¼	(32)	Male VCR Valve heater	3.75	(95)	27	0.23	**03804782**
½	(13)	1 ¼	(32)	Female VCR Valve heater	6.51	(165)	47	0.39	**04706690**

Note: Heaters fit Nupro® BN and BK series valves.

Accessories

Part	Description	Watlow Code Number
Y Connector*	Power splitter: 1 female, 2 male	**Z5303-2**
Female Dead Plug*	Insulating plug for last connector in chain	**Z5309-2**
Type J Thermocouple	12 inch (305 mm) 24 ga Type J Teflon® w/mini plug	**Z5786**
Type K Thermocouple	12 inch (305 mm) 24 ga Type K Teflon® w/mini plug	**Z5639**
Male Dead Plugs*	Insulating plug for last connector in chain	**Z6332**
Y Connector*	Power splitter: 2 female, 1 male	**Z6333**
Adaptor*	Female to male	**Z6334**
Adaptor*	Male to female	**Z6335**
Extender*	6 inch (152 mm)	**Z6374**

*All connectors use AMP Mate-N-Lok® connectors.

Y-adaptors and dead plugs

Sensor Pocket thermocouple: 12 in (305 mm) long, Type J or K, Teflon® insulated, #24 AWG, 2-prong mini-plug connector

Interconnects with Watlow temperature control consoles

Flexible Heaters

NEW PRODUCT

Silicone Rubber

Modular Pump Line Heaters

The tight contact fit of Watlow's pump line heaters provide superior, uniform heating of transfer lines.

Agency Certification, Recognition Compliance, and Approvals
(Contact factory for specific application and approvals)

- Complies with SEMI S2-93 standards
- UL® recognized for U.S. and Canadian safety standards
- CE, VDE
- NEC (National Electrical Code), Article #427-23
- UL® Listed available

General Specifications
- Heater and jacket material: reinforced silicone rubber fabric
- Color:
  Insulation and outer jacket: gray
  Heater: red-orange

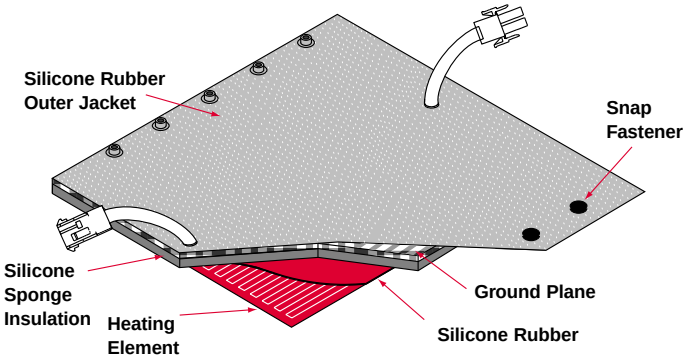

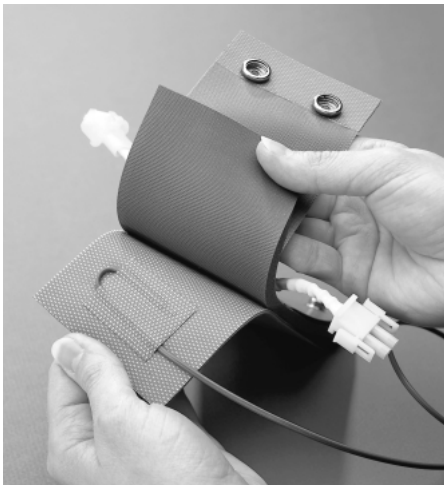

Sensor Pocket™ built-in to all straight length heaters 3 inches (76 mm) long and greater; one per heater.

- Snap type fasteners: ½ inch (13 mm) nominal diameter metal construction with nylon cover; maximum operating temperature 392°F (200°C)
- Velcro® fasteners available
- 120 and 208V~(ac) standard. Consult factory for other voltages.
- Power lead wires: 4 inch (102 mm) #18 AWG UL® 1180/CSA Teflon® insulated, rated 10A, leadwire pair encapsulated in reinforced silicone rubber sleeving
- Heaters interconnectable up to a 10A circuit
- **New low watt density:**
  1.5-2 inch diameter,
  1.5 W/in^2 (0.23 W/cm^2)
  3-4 inch diameter,
  1.25 W/in^2 (0.19 W/cm^2)

Quick Ship • *Same day shipment on stock units with orders received by 11:00 a.m. CST.*

Flexible Heaters

Kapton® Material

A thin, lightweight organic polymer film, Kapton® provides excellent tensile strength, tear resistance and dimensional stability. This heater is ideal for applications requiring low outgassing in a vacuum, or resistance to radiation, fungus and chemicals. Kapton® is also very resistant to solvents.

Performance Capabilities

- For operating environments as low as -319°F (-195°C), heater temperature as high as 392°F (200°C)
- Watt densities to 50 W/in^2 (7.75 W/cm^2)①

Features and Benefits

- **Excellent physical and electrical properties** result in thermal stability over a wide temperature range.
- **Transparent Kapton® material** allows inspection of internal details.
- **Resists radiation and fungus,** allowing its use in a wide range of applications.
- **UR® and cUR®** available on many custom designs.

Applications

- Military/aerospace, where low outgassing properties are required
- Medical, where thorough cleaning or sterilization is needed
- Laboratory research
- Photographic equipment
- Optical equipment
- LCD displays
- Computer equipment

Standard Specifications

Thickness: 0.007 inch (0.2 mm)

Flexibility (min. radius): 1/32 inch (0.8 mm)

Weight: 1.5 oz./ft^2 (0.05 g/cm^2)

Operating temperature: ②
Maximum: 392°F (200°C)
Minimum: -319°F (-195°C)

Kapton® and Teflon® are registered trademarks of E.I. du Pont de Nemours & Company.

UR® and cUR® are registered trademarks of Underwriter's Laboratories, Inc.

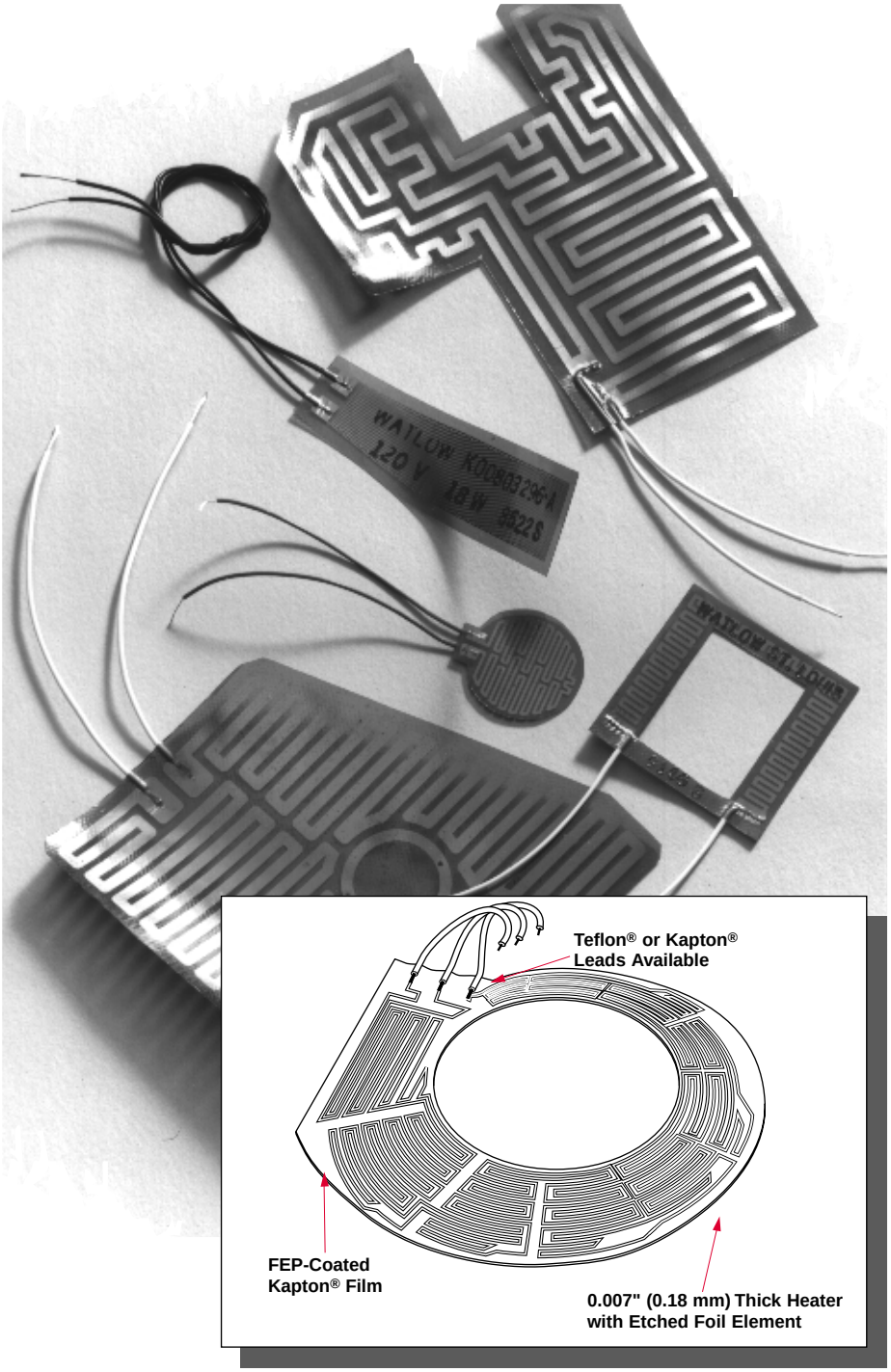

Maximum operating watt density:
At 77°F (25°C) in open air:
7 W/in^2 (1 W/cm^2)
At 300°F (150°C): 10 W/in^2

Watt density rating on stock units: 5 W/in^2 (0.8 W/cm^2)

Dielectric strength:
Minimum V~(ac): 1000

Flammability rating:
Self-extinguishing

Heater size limitations: 20 x 26 inches (510 mm x 660 mm)

Weight loss (outgassing):
0.51 percent

Standard lead length: 12 inches (305 mm) Teflon® E

① Watt density limits are application dependent (operating temperatures, bonding method and heat sink).
② We recommend maximum **part** temperature at 300°F (150°C). For more information, ask for technical letter #4, Kapton® heaters.

Flexible Heaters

F.O.B.: Columbia, Missouri

Kapton Material

Options

Stock

- Pressure Sensitive Adhesive Surface (PSAS) (see **page 165** for more information)

Made-to-Order

- PSAS
- Factory bonding
- Holes, cutouts, notches
- Special leads

Width in.	Width (mm)	Length in.	Length (mm)	Volts	Watts	Availability	Code Number 28V	Code Number 120V~(ac)
0.5	(13)	2	(50)	28	5	Stock	**K005020C5**	
1	(25)	1	(25)	28	5	Stock	**K010010C5**	
1	(25)	3	(75)	28	15	Stock	**K010030C5**	
1	(25)	5	(125)	120	25	Stock		**K010050C3**
1	(25)	15	(380)	120	75	Stock		**K010150C3**
2	(50)	10	(255)	120	100	Stock		**K020100C3**
3	(75)	5	(125)	120	75	Stock		**K030050C3**
4	(100)	4	(100)	120	80	Stock		**K040040C3**
5	(125)	5	(125)	120	125	Stock		**K050050C3**

Approx. net weight: 1.5 ounces/ft^2 (0.05 g/cm^2)

How to Order

Determine width, length, volts and watts. Specify the code number and quantity if the heater is listed in the stock list above. To specify PSAS add **A** to code number. For **made-to-order** heaters, please provide the following:

- Quantity
- Size (dimensions)
- Voltage
- Wattage/watt density
- Operating temperature
- Options, such as holes, PSAS.
- Will heater be subject to flexing?

Availability

Stock: Same day shipment of orders received by 11:00 a.m. CST.

Made-to-Order: Consult factory

Special Product Offering

Kapton® Handy Heater Kit—For Quick Heating Solutions

Watlow offers a convenient way to use Kapton® heaters. The Handy Heater Kit consists of 16 Kapton® heaters—13 rectangular and three circular—in different sizes and resistances. So when you need a small flexible heater in a hurry, you can pick the one that fits your application.

Circuit	Resistance (ohms)	Size (inches)
A	40	½ x 2 ⅛
B	90	1 x 2 ⅛
C	145	1 ½ x 2 ⅛
D	205	2 x 2 ⅛
E	80	½ x 3 ⅝
F	165	1 x 3 ⅝
G	275	1 ½ x 3 ⅝
H	375	2 x 3 ⅝
I	130	½ x 5 ¾
J	255	1 x 5 ¾
K	28	1 x 1 ⅛
L	13	½ x 1 ⅛
M	32	1 O.D.
N	180	2 O.D.
O	185	4 O.D.
P	45	1 x 1 ⅜

F.O.B.: Columbia, Missouri

Kapton® Kit		
Description	**Availability**	**Code Number**
Heater Kit Only	Stock	**K05711980**
Kit with PSAS	Stock	**K05711980A**
Kit with 3 Lead Pairs	Stock	**K05711980L**
Kit with PSAS and Leads	Stock	**K05711980AL**

Individual heaters are K05711980-circuit letter.

Other Features

- The heater sheet can be ordered with or without pressure sensitive adhesive (PSAS), depending on your needs. To specify PSAS add **A** to code number.
- The kit comes with instructions for wiring, lead attachment and selection and installation. Pre-tinned solder pads are provided for easy lead connections.
- The instructions also show you how to dial in your desired wattage using a variable voltage transformer.
- The heaters can be wired individually, in series, or parallel for hundreds of variations to satisfy your special application.

Availability

Stock: Same day shipment of orders received by 11:00 a.m. CST.

Flexible Heaters

Neoprene

Watlow's neoprene heater provides an economical method of supplying heat up to 250°F (120°C) where the higher temperature and watt density capabilities of the silicone rubber heater are not required. Like silicone rubber, neoprene is thin, strong, lightweight and convenient to apply.

Performance Capabilities

- Operating temperatures up to 250°F (120°C)
- Watt densities up to 10 W/in^2 ①

Features and Benefits

- **Resists weathering, abrasion and many chemicals** for longer life and greater versatility.
- **Custom shaped** to fit your part.
- **Lightweight construction** allows use in applications where weight is critical.
- **Responds quickly** to controls because of heater's low thermal-mass.

Applications

- Foodservice tables
- Battery heating (freeze protection)
- Photographic chemical tanks

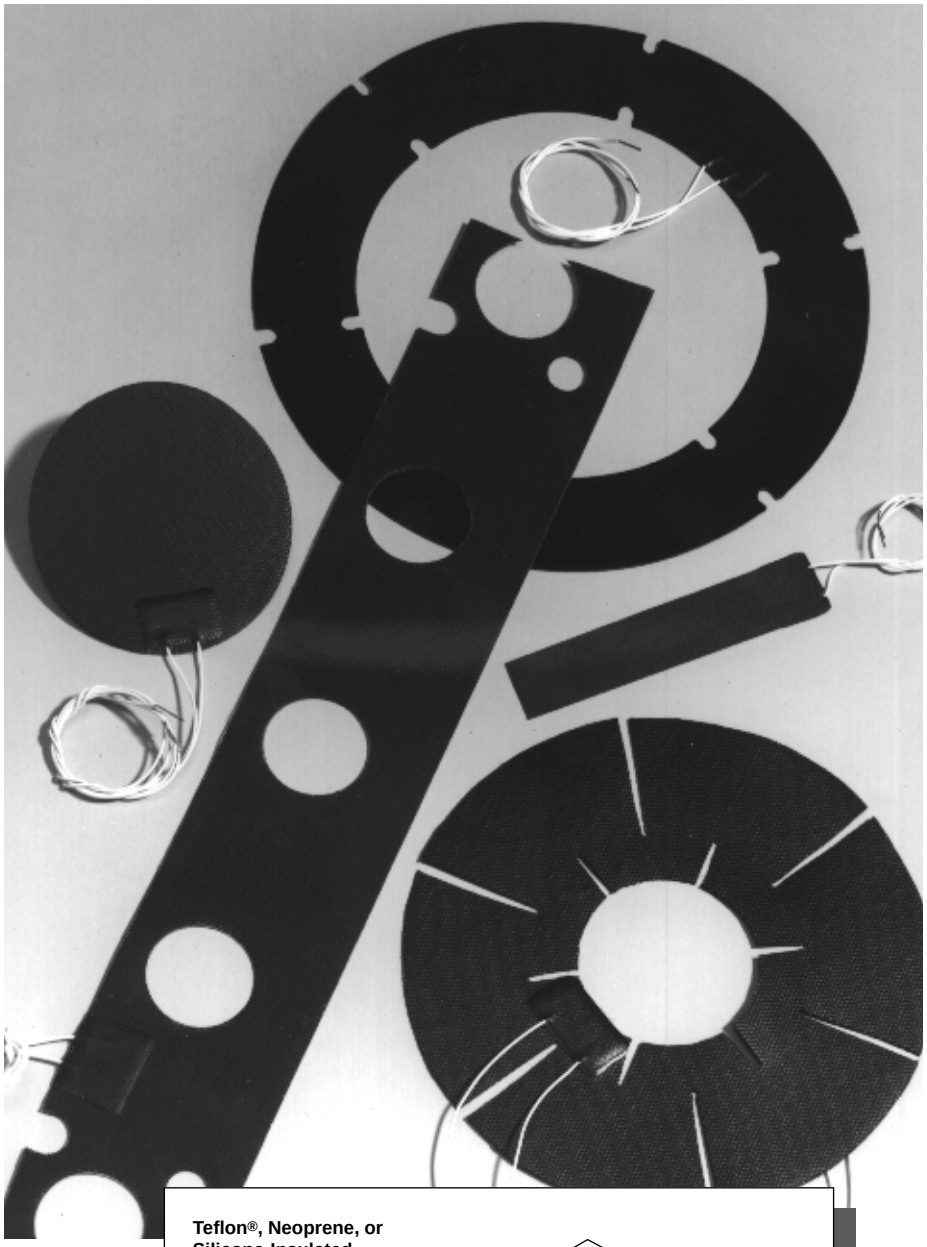

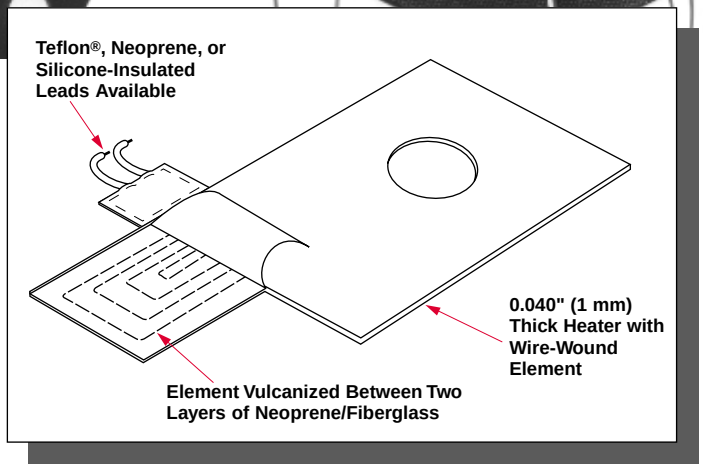

Teflon® is a registered trademark of E.I. du Pont de Nemours & Company.

① Watt density limits are application dependent (operating temperatures, bonding method and heat sink).

Neoprene

Applications and Technical Data

Determining Maximum Allowable Watt Density

This graph illustrates the maximum recommended heater watt density at various metal part or ambient air temperatures. The graph is based on wire-wound elements, cemented with RTV, with no backside insulation and using an on-off controller. See the graph explanation on **page 170** in the **Silicone Rubber** section for further clarification.

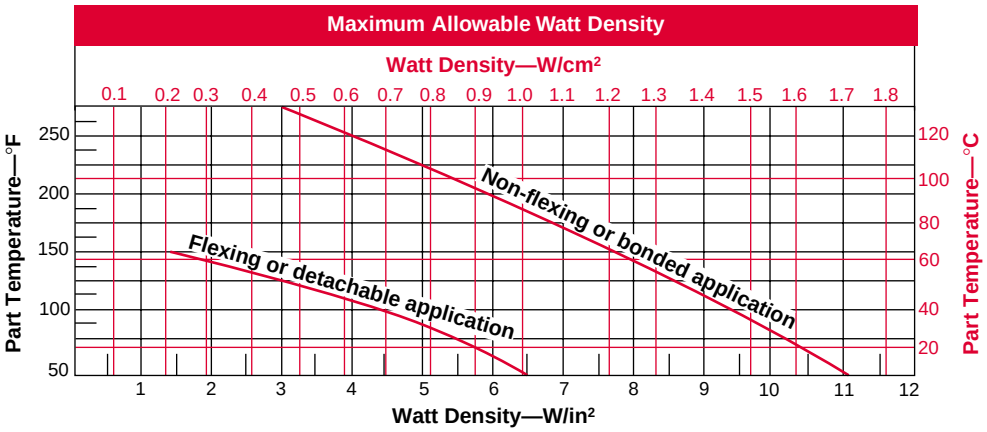

Options

Neoprene heaters can be designed to include the following options:

- Attachment techniques: PSAS, RTV, factory vulcanizing, mechanical fasteners
- Special leads
- Holes, cutouts and notches
- Thermostats

Detailed information on each of these options can be found on **pages 165 to 168** in the **Flexible Shapes and Geometries** section.

F.O.B.: Columbia, Missouri

How to Order

All neoprene heaters from Watlow are **made-to-order.** Please provide the following application information to place an order or request a quote:

- Size (dimensions)
- Voltage
- Wattage/watt density
- Operating temperature
- Options (leads, thermostats, attachment techniques, etc.)
- Quantity

Availability

Consult factory for these **made-to-order** units.

Flexible Heaters

HT Foil

This high temperature etched foil heater from Watlow is designed for demanding applications requiring operating temperatures up to 1100°F (595°C). The heater, only 0.030 inch (0.76 mm) thick, is insulated with a mica sheet. The heater is fairly rigid and must be securely and uniformly clamped from both sides for support and good heat transfer during operation.

Performance Capabilities

- Operating temperatures to 1100°F (595°C)
- Watt densities to 110 W/in^2 (17 W/cm^2) when operating at 500°F (260°C). Watt density should decrease as temperature increases.

Features and Benefits

- **High temperatures and watt** densities for more demanding applications.
- **Fast heat-up** due to thin construction and low mass design.
- **Easy to design** in circular or complex two-dimensional shapes.
- **More uniform part temperatures** are possible with etched foil zoned heating.

Applications

- Semiconductor industry: wafer processing equipment
- High temperature platens for laminating presses

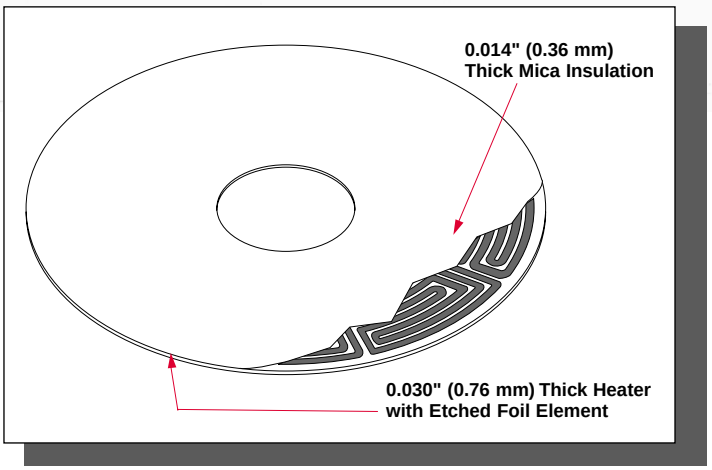

HT Foil

Applications and Technical Data

Installation and Mounting

The HT Foil heater is designed to be permanently clamped. If the lead connection points are within the clamped area, a relief in one of the clamped surfaces is required to allow adequate clamping of the active heater area.

For further details on mounting methods, see **Watlow technical letter #6**, flexible heaters.

General Specifications

Although Watlow doesn't stock HT Foil heaters, there are several specifications common to most of the custom designs. They include:

- **Thickness over heated area:**
  0.030 inch (0.76 mm)
- **Thickness over lead connection area:**
  0.200 inch (5 mm)
- **Dielectric strength—volts ac, minimum:**
  1000V~(ac)
- **Maximum operating temperature:**
  1100°F (593°C)
- **Maximum allowable watt density at various temperatures:**

1000°F (540°C)	20 W/in^2 (3.1 W/cm^2)
900°F (480°C)	40 W/in^2 (6.2 W/cm^2)
800°F (425°C)	60 W/in^2 (9.3 W/cm^2)
700°F (370°C)	75 W/in^2 (11.6 W/cm^2)
600°F (315°C)	90 W/in^2 (14 W/cm^2)
500°F (260°C)	110 W/in^2 (17 W/cm^2)

- **Lead wire—Type MGT 600 volt with Nickel clad Cu conductor:**
  840°F (450°C)

Options

The following options are possible with HT Foil heaters from Watlow:

- Holes, cutouts, and notches
- Zoned wattage

Detailed information on holes, cutouts and notches can be found on page 166 in the Flexible Shapes and Geometries section.

F.O.B.: Columbia, Missouri

How to Order

All HT Foil heaters from Watlow are **made-to-order.** Please provide the following application information to place an order or request a quote:

- Size (dimensions)
- Voltage
- Wattage/watt density
- Operating temperature
- Options (holes, zoned wattage)
- Quantity

Availability

Consult factory

Multicell Heaters

Multicell Heaters

The advanced design of the multicell insertion heater from Watlow offers three major advantages: extreme process temperature capability, independent zone control for precise temperature uniformity, and loose fit design for easy insertion and removal.

Performance Capabilities

- Has been engineered to achieve process temperatures above 2200°F (1204°C)
- Up to eight independently controllable zones

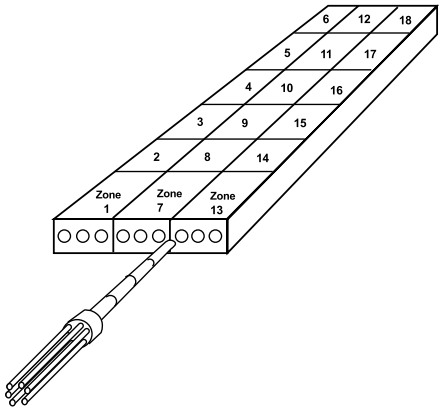

Features and Benefits

- **Multiple, independently controllable zones** allow process temperature uniformity not possible with any other single sheathed heater.
- **The heater's radiant design allows for loose insertion** in boiling holes, and piping holes. Since it will not bind or seize in the hole, the heater is easily removed and replaced with minimal down time.
- **The oxidized sheath** provides high emissivity and improves the heater's performance as oxidation increases.
- **Individually metal-sheathed coils** are swaged into a larger, high temperature alloy outer sheath for maximum protection against element burnout through the outer sheath.

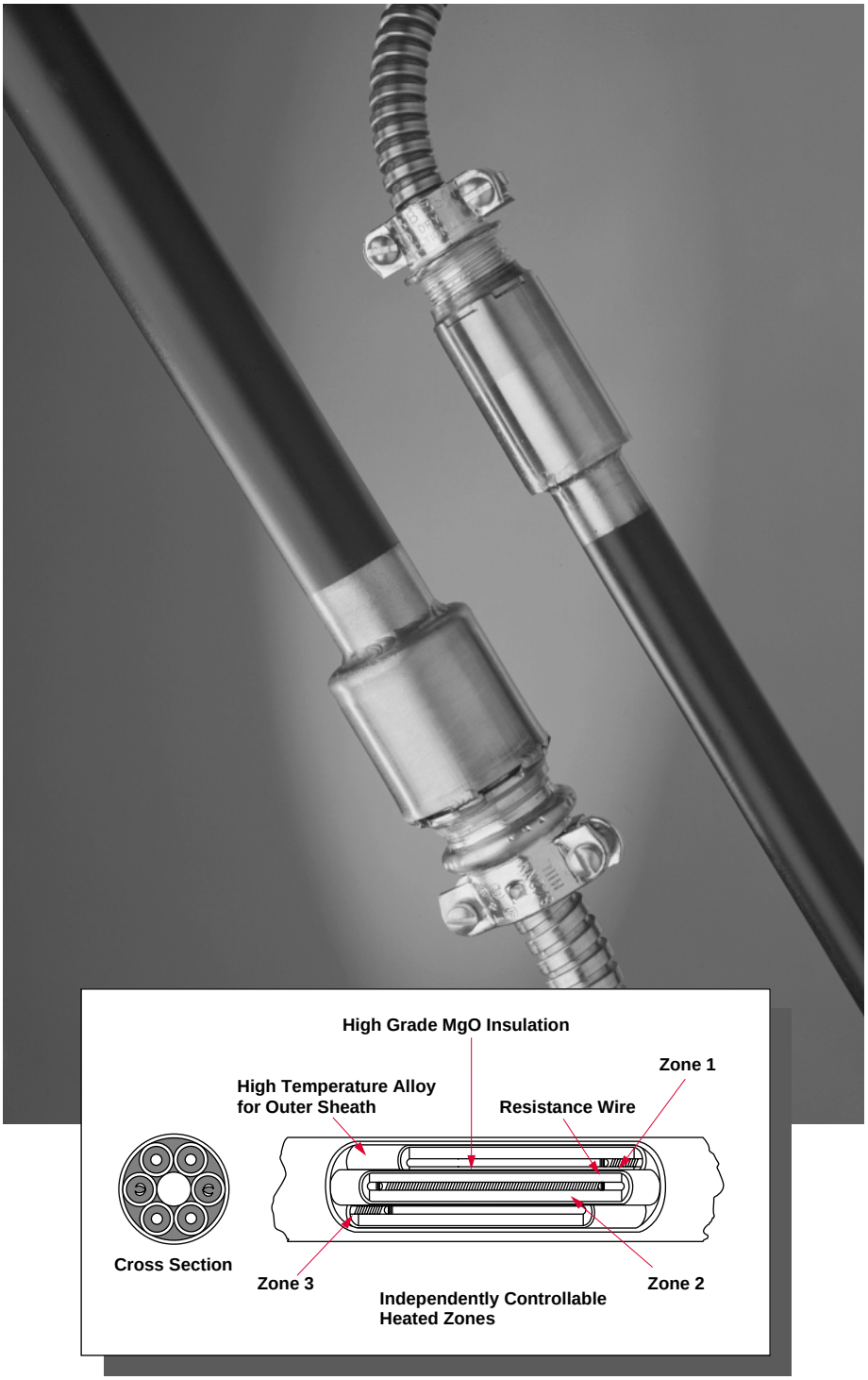

- **Satisfies long heater needs** (40 foot plus) providing reduced wiring.
- **Quick disconnect plug and jack** permit fast replacement of individual elements while the press stays at operating temperature.
- **Special bending capabilities** solve unusual machinery needs and keep leads away from heated zones.
- **Flexible leads up to 986°F (530°C)**.

Multicell Heaters

Applications

- Hot gas generators
- Hot isothermal forming
- Radiant heating processes
- Glass tempering
- Soil remediation
- Hot forging dies
- Long heater needs (40 foot plus)
- Heated platens
- Aluminum processing
- Fluidized bed processes
- Glass bending, forming, treating
- Hazardous waste treatment systems
- Super plastic forming
- Heated platens (single and multiple zones)
- Heat treating processes
- Super plastic forming with diffusion bonding

Applications and Technical Data

Definition of Terms

Cold Toe: A physical minimum requirement of 1.6 ± 5/16

Independent Zone: Up to three, separately controlled zones which can be of varying lengths and wattages

Heated Length: The combined sum of all independent zones

Wattage: Ratings are the combined sum of all independent zones

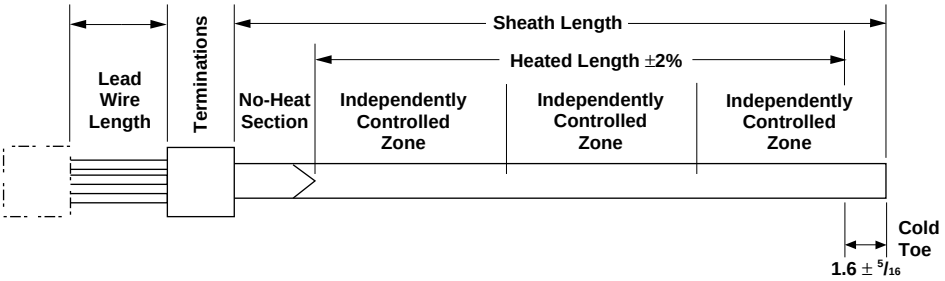

Note: For heated toe see **page 201**.

Note: Shaded area is standard, Non-shaded area consult factory.

A = 0.935 inch diameter, 240V~(ac), 3-phase
B = 0.685 inch diameter, 240V~(ac), 3-phase
C = 0.935 inch diameter, 480V~(ac), 3-phase
D = 0.685 inch diameter, 480V~(ac), 3-phase

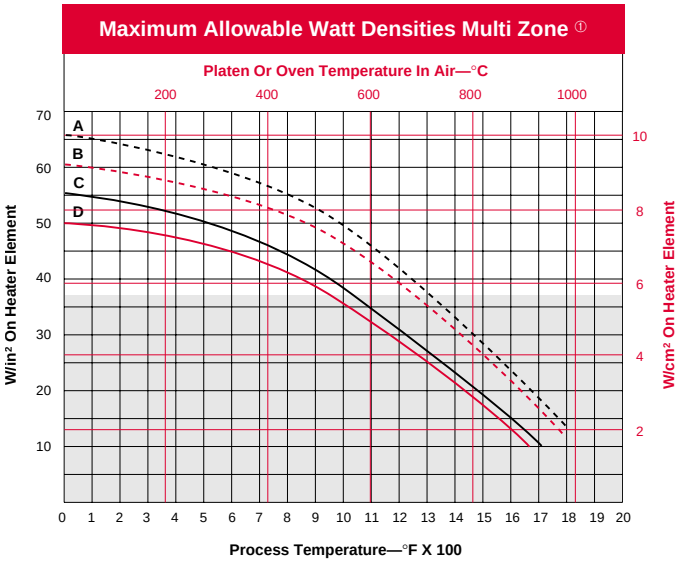

Note: Shaded area is standard, Non-shaded area consult factory.

A = 0.935 inch diameter, 240V~(ac), 3-phase
B = 0.685 inch diameter, 240V~(ac), 3-phase
C = 0.935 inch diameter, 480V~(ac), 3-phase
D = 0.685 inch diameter, 480V~(ac), 3-phase

Multicell Heaters

Applications and Technical Data

Continued

Physical Design Parameters

All bending of a multicell heater is restricted to the cold area of the heater. All bend radii points must be one inch (25 mm) from the hot/cold junction.

"L"

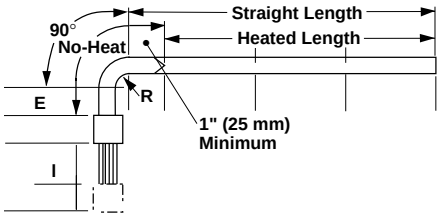

Angle

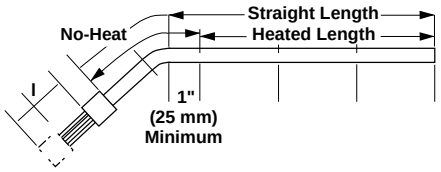

Droop

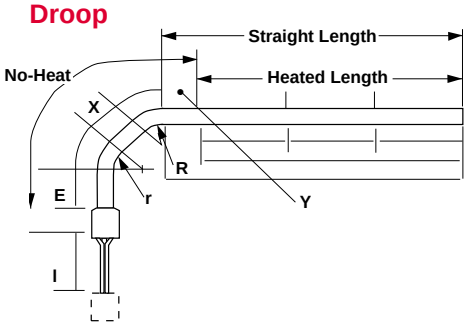

Crank

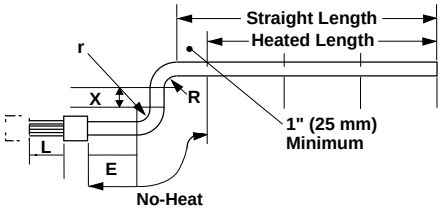

Straight

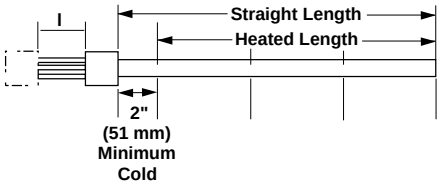

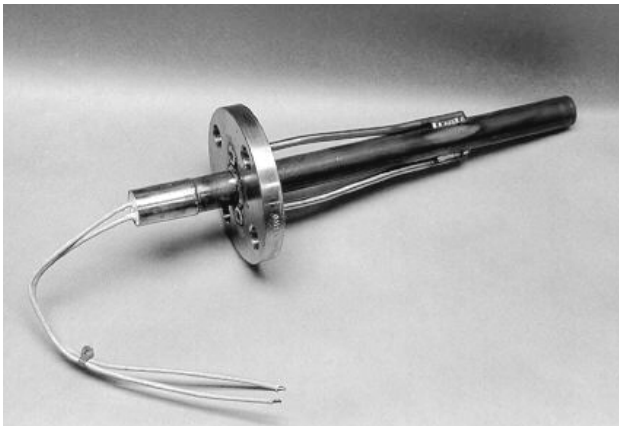

Special high-temperature R&D project with replaceable external thermocouple capability.

Multicell Heaters

Applications and Technical Data

Physical Design Parameters

Continued

Diameter inches	Bending Style	Sheath Length Min./Max. inches (mm)	Minimum No-Heat Length inches (mm)	Total Heated Length Min./Max. inches (mm)
0.935	Straight	8 (203) 180 (4572)	2 (51)	6 (152) 160 (4064)
0.935	Angle	13 ½ (343) 180 (4572)	7 ½ (191)	6 (152) 172 ½ (4382)
0.935	L	15 ¾ (400) 180 (4572)	9 ¾ (248)	6 (152) 170 ¼ (4324)
0.935	Crank	23 (584) 180 (4572)	17 (432)	6 (152) 163 (4140)
0.935	Droop	18 (457) 180 (4572)	12 (305)	6 (152) 168 (4267)
0.935 HOT-TOE	Straight	12 (305) 66 (1676)	2 (51)	10 (254) 64 (1626)

Symbol	E	r	X	R	Y	I
Min. Length inches (mm)	4 (102)	2 ½ (38)	1 ½ (38)	2 ½ (38)	1 (25)	12 (305)

Zones	1	2	3
Min. Heated inches (mm)	6 (152)	6 (152)	6 (152)

Weldments to the Multicell Heater Element

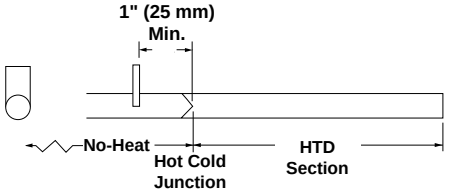

Tabs, rings and brackets are used to hold the heater in place and keep it from creeping.

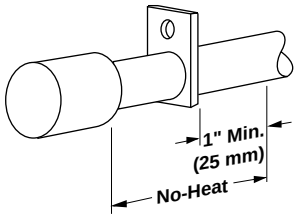

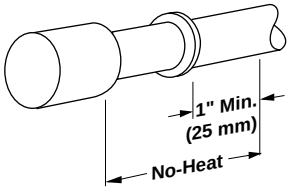

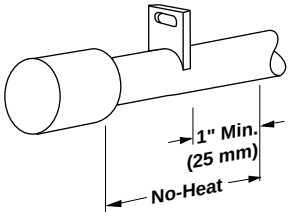

Diameter inches	Bending Style	Sheath Length Min./Max. inches (mm)	Minimum No-Heat Length inches (mm)	Total Heated Length Min./Max. inches (mm)
0.685	Straight	8 (203) 180 (4572)	2 (51)	6 (152) 178 (4521)
0.685	Angle	12 ½ (318) 180 (4572)	6 ½ (165)	6 (152) 173 ½ (4407)
0.685	L	14 (356) 180 (4572)	8 (203)	6 (152) 172 (4369)
0.685	Crank	18 (457) 180 (4572)	12 (305)	6 (152) 168 (4267)
0.685	Droop	15 ½ (394) 180 (4572)	9 ½ (241)	6 (152) 170 ½ (4331)

Symbol	E	r	X	R	Y	I
Min. Length inches (mm)	4 (102)	2 ½ (38)	1 ½ (38)	2 ½ (38)	1 (25)	12 (305)

Zones	1	2	3
Min. Heated inches (mm)	6 (152)	6 (152)	6 (152)

Multicell Heaters

Multicell Heaters

Termination Standards

Potting Sleeves

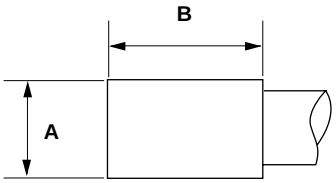

Heater O.D. inches	Dimension A inches (mm)	Dimension B inches (mm)	Zone	Phase	Type No.
0.685	¾ (19)	1 ½ (38)	1	1	61L
0.935	1 (25)	1 ½ (38)	1	1	91L
0.935	1 (25)	1 ½ (38)	1	3 ①	91L

① 3 wire only

Potting Cups

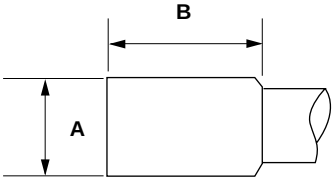

Heater O.D. inches	Dimension A inches (mm)	Dimension B inches (mm)	Zone	Phase	Type No.
0.685	1 ⅜ (35)	1 ⅜ (35)	2	1	62L
0.685	1 ⅜ (35)	1 ⅜ (35)	3	1	62L
0.685	1 ⅜ (35)	1 ⅜ (35)	1	3	62L
0.685	1 ⅜ (35)	1 ⅜ (35)	2	3	62L
0.935	1 ⅜ (35)	1 ⅜ (35)	2	1	92L
0.935	1 ⅜ (35)	1 ⅜ (35)	3	1	92L
0.935	1 ⅜ (35)	1 ⅜ (35)	1	3	92L
0.935	1 ⅜ (35)	1 ⅜ (35)	2	3	92L

Ceramic Wedge with 10-32 Threaded Terminals

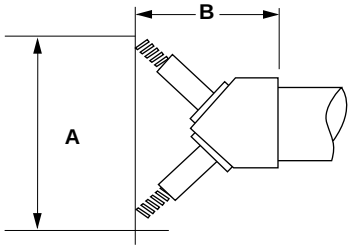

Heater O.D. inches	Dimension A inches (mm)	Dimension B inches (mm)	Zone	Phase	Type No.
0.685	1 ¼ (32)	1 ¼ (32)	1	1	61T
0.935	1 ⅝ (41)	1 ⅝ (41)	1	1	91T

Potting Cup with 10-32 Threaded Terminals

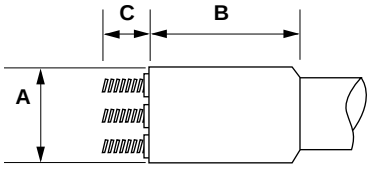

Heater O.D. inches	Dimension A inches (mm)	Dimension B inches (mm)	Dimension C inches (mm)	Zone	Phase	Type No.
0.685	1 ⅜ (35)	1 ⅜ (35)	⅝ (16)	1	3	62T
0.935	1 ⅜ (35)	1 ⅜ (35)	⅝ (16)	1	3	92T

Note: All threaded terminals are supplied with mating nuts and washers.

Potting Cup for Right Angle Exit

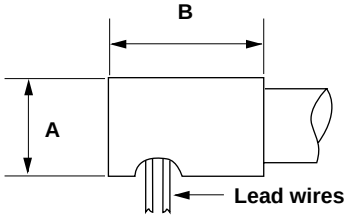

Heater O.D. inches	Dimension A inches (mm)	Dimension B inches (mm)	Zone	Phase	Type No.
0.685	¾ (19)	1 ½ (38)	1	1 or 3	RAE1
0.935	1 (25)	1 ½ (38)	1	1 or 3	RAE2

Multicell Heaters

Termination Assemblies

All termination assemblies are available with potting sleeves or cups, with or without armorflex lead wire protection. Please specify **potting vessel** and **lead cover option** when ordering.

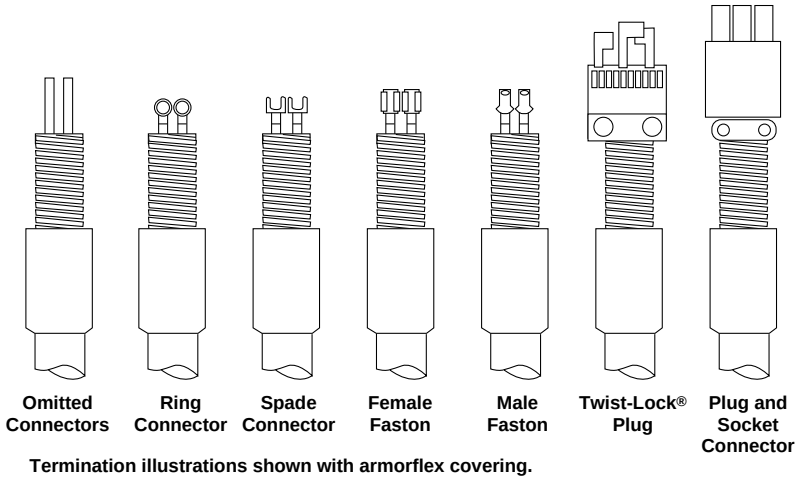

Termination illustrations shown with armorflex covering.

Options

Plug and Socket and Twist-Lock® Plug Variations

Two zone heaters requiring a quick disconnect plug will typically be supplied with a four contact plug and socket while three zone heaters will be supplied with a six contact plug and socket. Twist-Lock® plug variations are typically supplied with single zone multicell heaters. When ordering a Twist-Lock® plug, please specify the **NEMA type** as shown below.

For any other plug variations, please contact the factory.

Note: Mating connectors are also available for plug terminations listed. Contact factory.

Male Plug	Zones	Type	Voltage	Amperage	Blade Type
P404-CCT	2	4 Wire	600	30	Straight
P406-CCT	3	6 Wire	600	30	Straight
4570C	1	3 Wire	250	15	Twist-Lock®
4720C	1	3 Wire	125	15	Twist-Lock®
5266C	1	3 Wire	125	15	Straight
5666C	1	3 Wire	250	15	Straight
7102C	1	2 Wire	250	20	Twist-Lock®
7545C	1	2 Wire	250	15	Twist-Lock®
7567C	1	3 Wire	125	10	Twist-Lock®

Plug and Socket

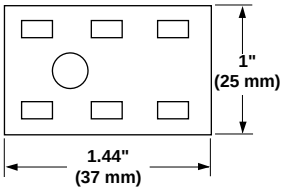

6 Contacts

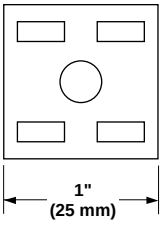

4 Contacts

Twist-Lock®

4720C

4570C

7567C

7102C

7545C

Straight

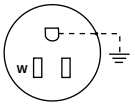

5266C

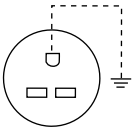

5666C

Twist-Lock® is a registered trademark of Hubbell Incorporated.

F.O.B.: Hannibal, Missouri

How to Order

To order multicell insertion heaters, please specify:

- Sheath diameter
- Heater length
- Configuration
- Potting vessel
- Connector
- Lead cover
- Flexleads
- Watts
- Volts
- Lead wire length (12-inch standard)
- NEMA type for Twist-Lock®/straight plugs, if required
- Process temperature
- Control system
- Ground voltage

Availability

Made-to-Order: Consult Watlow

Multicell Heaters

Multicell Heaters

HOT-TOE Multicell Heaters

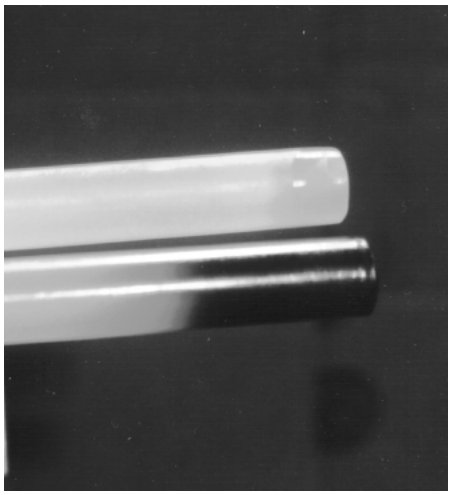

Watlow's new HOT-TOE multicell heater eliminates the unheated section typically found at the end of standard multicell constructions. Benefits of the HOT-TOE multicell are threefold:

- heat to the full length of the assembly
- optimum heat distribution for extended heater life
- double wall ground fault isolation

Multicell heaters have always offered many advantages including extreme process temperature capabilities, independent zone control and a loose fit design for easy insertion and removal. Now Watlow's multicell heater line includes another valuable heater characteristic with the addition of the HOT-TOE multicell.

This HOT-TOE feature allows for optimum heat distribution with a lowered watt density for shorter length designs. By heating the full section of the unit, temperatures for internal wires are lower, therefore improving heater life. Due to the design of the HOT-TOE multicell, ground fault isolation over the heated portion can also provide improved heater safety.

Watlow's HOT-TOE multicell heaters can be engineered to achieve process temperatures to 1900°F (1037°C) and can satisfy 240 volt, single-phase power requirements for the process industry.

Designed to handle applications that demand high voltages and wattages, these multicell heaters have a rugged construction that permits the heaters to survive in conditions that would normally be lethal to many other heater types.

U.S. Patent Pending

Performance Capabilities

- Sheath temperatures to 1900°F (1038°C)
- Heated toe section

Features and Benefits

- **Inconel® 600, Incoloy® 800 or equivalent sheath material and a special internal construction** assures high temperature performance and corrosion protection in static air applications.
- **Available in 0.935 inch (23.7 mm) diameter** it is configurable to existing tubular designs that may be experiencing short life.
- **Single-phase, single zone, 240 volts** individual metal-sheathed coils swaged into high-temperature outer sheath and solves unusual machinery requirements.
- **Single-ended termination lead wires** can be installed into flanges and screw plugs similar to standard product configurations.
- **Bendable in standard multicell configurations** makes it easy to apply in a wide variety of applications.

Applications

- SPF single zone platens
- Radiant heating
- Drying
- Environmental—VOC abatement
- Process air heating: duct heaters, circulation heaters
- Vacuum
- Flue gas cleaning (desulfurization)
- Fluidized beds
- Light metals extrusion

Inconel® and Incoloy® are registered trademarks of Special Metals Corporation.

Multicell Heaters

HOT-TOE Multicell Heaters

Single Zone HOT-TOE Heater*

This chart should be used to verify the correct watt density for a platen or oven application assuming no air flow. To use this chart, select platen or oven temperature from X axis. Find the intersection with curve A. Determine maximum watt density by reading left or right to the intersection with Y axis.

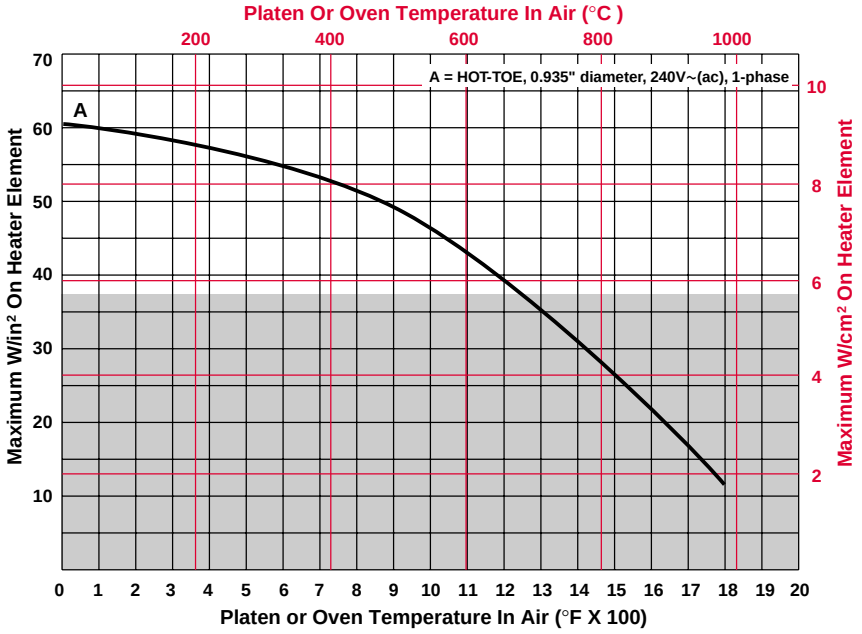

Note: Shaded area is standard. Non-shaded area, consult factory.

* Other designs and voltages with higher temperature capabilities are available. Consult factory.

Sheath Temperature Comparisons

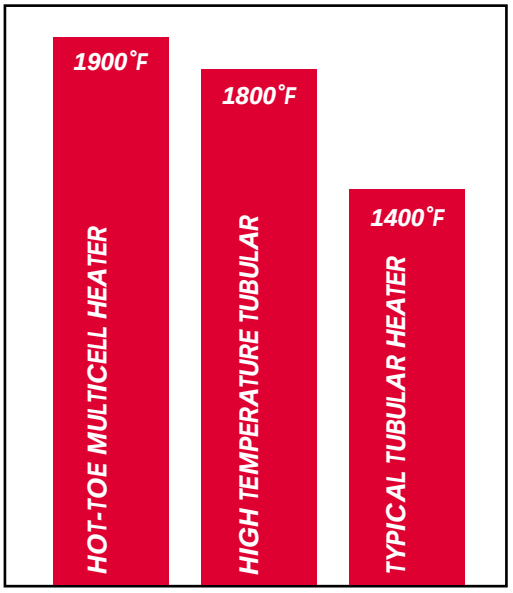

*Assuming normal design practices.

F.O.B.: Hannibal, Missouri

How to Order

To order, please specify:

- Volts
- Watts
- Heater sheath material
- Lead wire temperature rating
- Heated length
- No-heat length—lead end only
- Overall sheath length
- Formation—if desired
- Mounting option, stop bracket, etc.
- Process temperature

Availability

Made-to-Order: Five to six weeks

For Multicell Radiant Heater Specification Data Sheet see FAX REPLY sheet 1470.

Radiant Heaters

The RAYMAX® Family

Watlow's diverse RAYMAX® heater line allows you to solve virtually any application that requires radiant heat. Our capabilities cover a wide range of needs, from contamination-resistant surfaces, to fast responding high temperature panels, to replaceable tubular elements.

Applying radiant heaters can be complicated. Watlow's engineering staff has the level of training and expertise required to help meet your application requirements, providing a high degree of technical support such as conducting testing for your application at our facility, calculating your watt density and temperature requirements, and recommending system components such as sensors and controllers. With our experience in a wide range of industries, chances are Watlow has already helped someone handle a radiant heating application like yours.

Features and Benefits

- **The full RAYMAX line** offers a variety of styles and capabilities to match the ideal temperature and watt density requirements of your application.
- **Engineering and application support** from Watlow makes your projects run more smoothly.
- **Custom designs** can be quickly adapted for particular needs such as special wattage zoning.
- **Watlow sensors and controllers** are completely compatible with RAYMAX heaters for a single source thermal system that is reliable and designed just for your application.

Applications

- Thermoforming
- Food warming
- Paint and epoxy curing
- Heat treating
- High temperature furnaces
- Tempering and annealing processes

Caution: *Fire Hazard*

Radiant heaters must not be operated in the presence of flammable vapors, gases or combustible materials without proper ventilation and safety precautions. Radiant heaters must be properly wired and controlled to comply with all applicable electrical codes.

The RAYMAX Family

Panel Variations

Low Profile

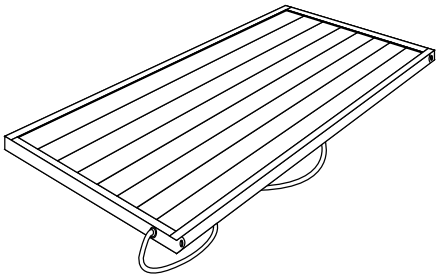

This design may be required where mounting space is limited, for example, when converting existing equipment or designs to radiant panels.

Available options may vary from the standard units when you specify a low profile design. Consult Watlow for further information.

Available with RAYMAX 1010, 1120, 1220, 1330, and 2030.

Zoning

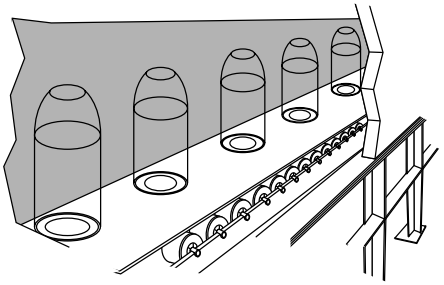

Watt densities can be varied across the entire width of RAYMAX heaters. If desired, each zone can have an individually controlled power supply.

Zoning can be very valuable when part of the product requires more heat, or when you must compensate for heat losses at the edges. By separately turning off part of the heated width, you can adjust for various widths of material.

Available with RAYMAX 1010, 1120, 1220, 1330, and 2030.

Radiant Heaters

The RAYMAX Family

Mounting Accessories

Application note: Allow for some thermal expansion of the heater case during operation. An expansion of up to one percent can occur when the case reaches its normal maximum limit of 1100°F (595°C). If your equipment has mounting screws to connect to the slots in the mounting legs, allow for a small amount of extra length. If you are using mounting holes to interface with the mounting studs on the back of the RAYMAX case, make sure your holes are oversized. Also, use washers and avoid overtightening.

Mounting Studs

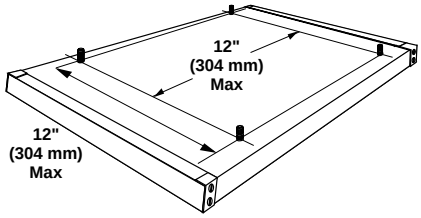

Standard ¼ X 20 X 1 ½ inch (M6 X 40) steel studs are welded to the case. For best support, studs should be approximately located on 12 inch centers. Consult Watlow for exact locations on specific heaters.

Available with RAYMAX 1010, 1120, 1220, 1330, and 2030.

Mounting Legs

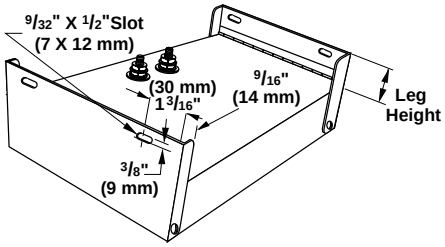

Mounting legs are extensions of the steel end caps with mounting slots for bolting directly to field support members. There is no extra charge for legs; they can be supplied in half inch increment from 0.5 inch (12.5 mm) to three inches (76 mm). No slots are provided in legs less than one inch (25 mm) long.

For panels over 24 inches (610 mm) long, mounting studs are recommended for the best panel support.

Available with RAYMAX 1120, 1220, and 2030.

Terminal Accessories

Special Terminal Locations

If the standard terminal locations shown will not meet your needs special locations can be designed.

Available with RAYMAX 1010, 1120, 1220, 1330, and 2030.

Terminal Box

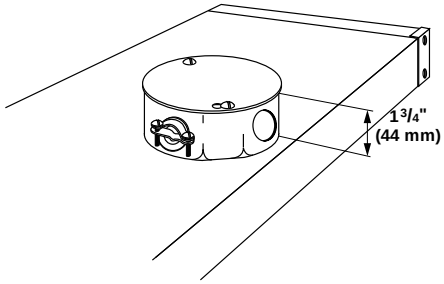

To protect electrical connections, a standard NEMA terminal box is available. The standard size is 4 X 4 X 1 ⅝ inches (102 X 102 X 41 mm) with knockouts for ½ inch (12.5 mm) conduit. Other NEMA sizes are also available.

Care should be taken to use lead wire capable of withstanding the ambient temperatures.

Available with RAYMAX 1010, 1120, 1220, 1330, and 2030.

Wiring Raceway

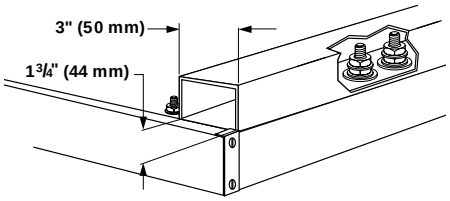

Custom designed to your specific requirements, a steel raceway provides electrical and physical protection for all terminal connections. This can be particularly useful for multi-zone panels.

Available with RAYMAX 1010, 1120, 1220, 1330, and 2030.

The RAYMAX Family

Temperature Control

Thermowells

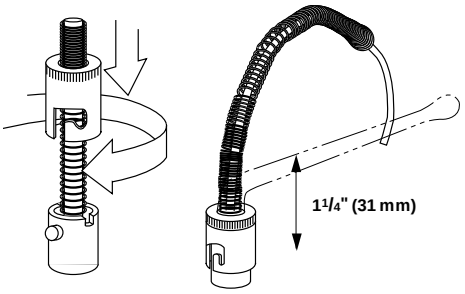

A thermowell allows you to use a thermocouple with a bayonet fitting to monitor heater temperature. The thermowell is located on the back of the panel to allow easy access for thermocouple replacement. Spring tension holds the tip of the thermocouple in contact for close control of the heater temperature. Thermocouple not included.

Available with RAYMAX 1010, 1120, and 1330.

Thermocouple Clamps

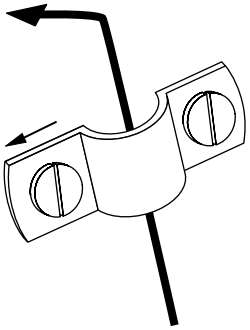

A thermocouple mounting clamp can be provided on the end of the heater case. The clamp is suitable for use with ⅛ inch (3.175 mm) and ¼ inch (6.35 mm) O.D. sheath thermocouples, which should be bent 90° so that the sensing tip is just above and lightly touching the hot face at an element location.

Available with RAYMAX 1220 and 2030.

Welded Thermocouple

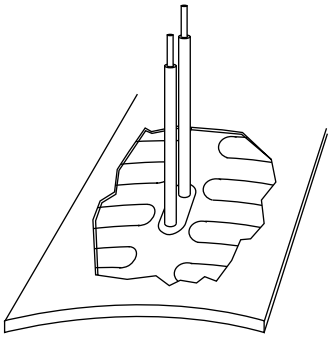

A thermocouple junction is welded to the emitting surface to provide optimum temperature sensing accuracy and responsiveness. This option permits the actual radiating face temperature to be precisely monitored and controlled.

Available with RAYMAX 1010, 1120, and 1330.

Thermocouple Pocket

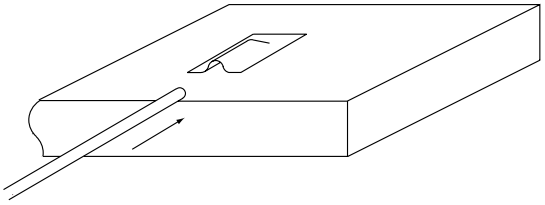

A thermocouple pocket is welded to the emitting surface. The pocket accepts a 0.063 inch (1.6 mm) diameter thermocouple (not included). This option provides accurate temperature sensing and easy thermocouple replacement.

Available with RAYMAX 1010, 1120, and 1330.

Radiant Heaters

RAYMAX® 1010

Designed to resist contamination, the RAYMAX® 1010 is ideal for use in screen printing, food warming and other low heat applications. The heater's "sealed face" keeps contaminants away from the heating element, and this metal surface can be easily wiped or brushed clean whenever needed.

The rugged all-metal construction results in a shock-proof, shatter-proof heater that is durable and long lasting. No fragile glass, ceramic or fiber is used.

Performance Capabilities

- Face temperature: 1000°F (540°C) max.
- Watt densities: 10 W/in^2 (1.5 W/cm^2) max.
- 50 amps maximum

Features and Benefits

- **Uniform full surface heat** source provides better, more even heat.
- **No reflectors** to clean or replace.
- **Accurate, repeatable temperature** sensing options.
- **Convenient ready-to-use package** makes installation easier.
- **One inch thick** backside insulation reduces losses.
- **UL® component recognized** versions are available.
- **Totally sealed version available** suitable for hose down applications.

Applications

- Drying screen-printed textiles
- Curing process coatings on circuit boards
- Food warming/cooking
- Epoxy curing
- Thermoforming

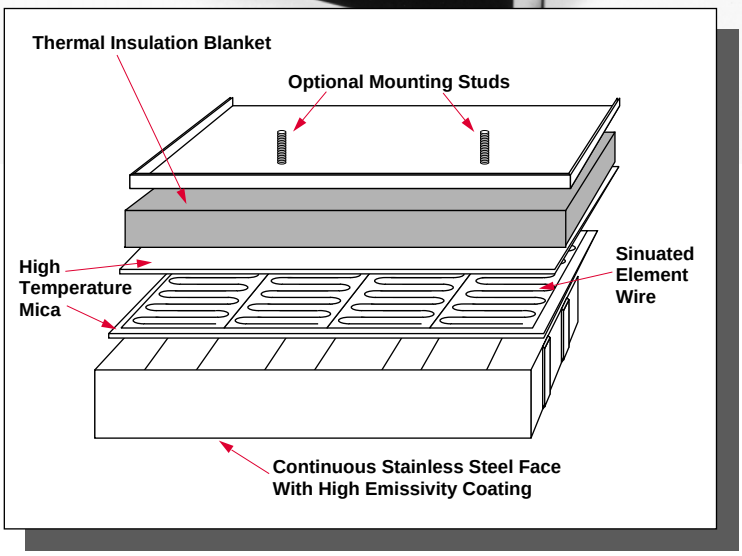

UL® is a registered trademark of Underwriter's Laboratories, Inc.

RAYMAX 1010

Applications and Technical Data

Sizes and Ratings

Thickness: 1.87 inch (47.4 mm)

Volts: 120, 240, 480V~(ac), 1-phase. 3-phase available on unit widths divisible by 6.

Watt density: Up to 10 W/in^2 (1.5 W/cm^2), 50 amps max.

Face temperature: Up to 1000°F (540°C)

Typical peak energy wavelength: 3.5-4 microns

Specifications

Heater Dimensions	Min.	Max.	Increments
Width: inches (mm)	4 (101.6)	20 (508)	2 (50.8)
Length: inches (mm)	10 (254)	68 (1727.2)	any
Area: in^2 (cm^2)		864 (5574)	any

Note: Less than maximum length X width may exceed maximum area.

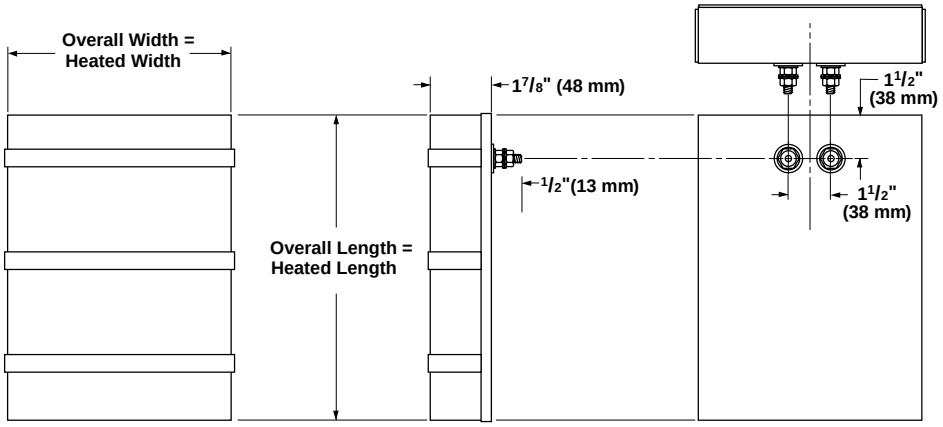

F.O.B.: St. Louis, Missouri

Options

- Terminal box
- Thermowell (VAT style thermocouple required)
- Thermocouple pocket (thermocouple required)
- Thermocouple welded to hot face
- Mounting studs
- Totally sealed construction
- Food-safe surface treatment

How to Order

All units are **made-to-order**. Please specify the following information when placing an order:

- Width and length
- Total wattage
- Voltage and phase
- Mounting studs, if desired
- Terminal location, if non-standard
- Terminal box, if desired
- Internally welded thermocouple or thermowell, if desired

Availability

Please consult Watlow for lead time required.

Quick Ship • *Next day shipment on all stock units.*

Radiant Heaters

RAYMAX® 1120

The RAYMAX® 1120 is a lightweight, yet sturdy and durable radiant heater panel. The emitter sheath is stainless steel with a black coating that makes it a highly efficient radiating surface. In addition, the heater's low mass allows rapid start-up and fast response to controls.

The patented RAYMAX heater features one inch (25 mm) wide emitter strips that are individually replaceable for lower maintenance costs. Weighing only 5.5 lbs/ft^2 (26.8 kg/m^2), the heater is easy to mount.

Performance Capabilities

- Face temperature: 1100°F (595°C) max.
- Watt density: 20 W/in^2 (3 W/cm^2) max.

Features and Benefits

- **Replaceable emitters** reduce your costs.
- **High temperature mica** electrically insulates nickel chromium resistance wire, permitting longer heater life.
- **High emissivity coating** on emitter strips improves radiant heating efficiency.
- **Thermal insulation,** one inch thick, backs the emitter strips to reduce backside losses.
- **Uniform full surface heat source** provides better, more even heat.
- **Special requirements** are easily met with custom sizes and ratings.
- **Next day shipment** is available on stock sizes.

Applications

- Thermoforming
- Textile drying
- Paint curing
- Powder coating fusing
- Shrink wrapping
- Circuit board soldering

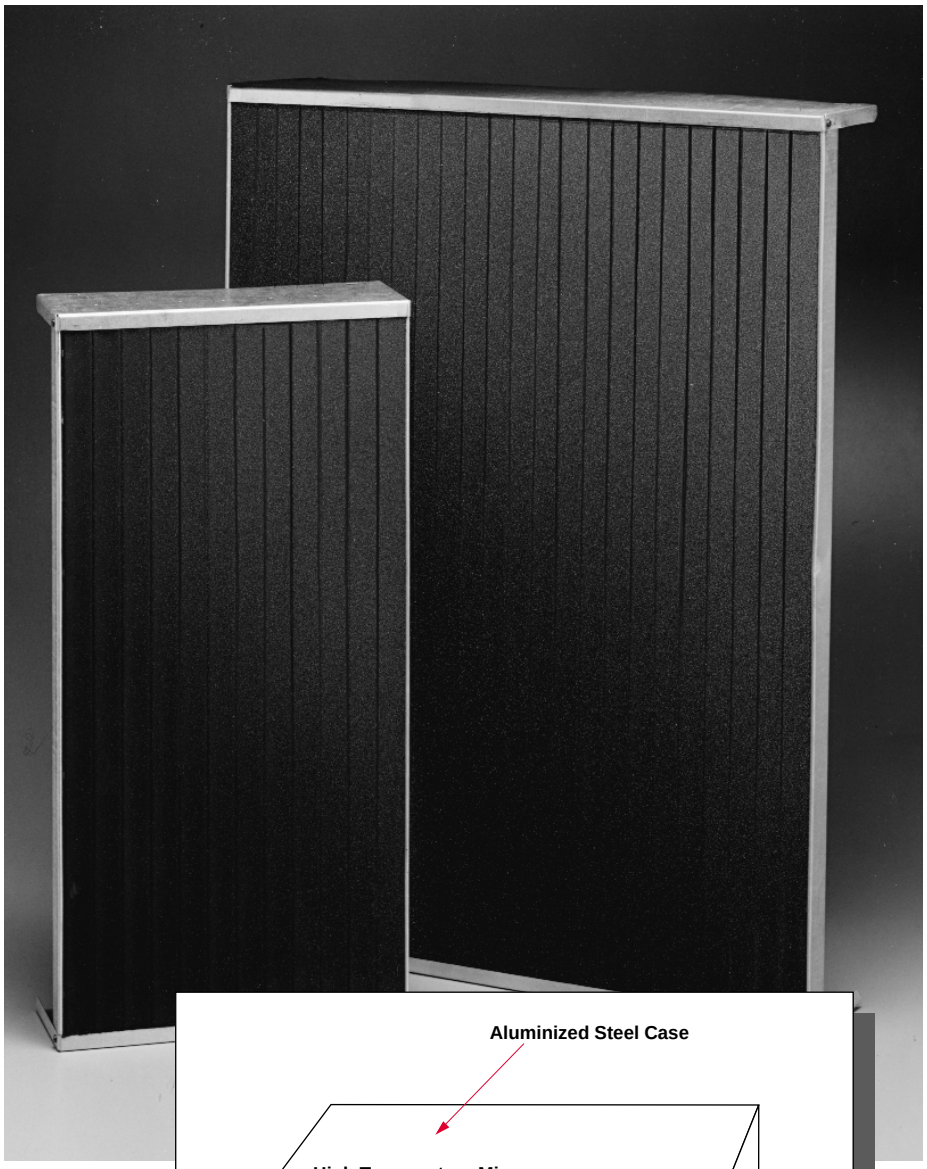

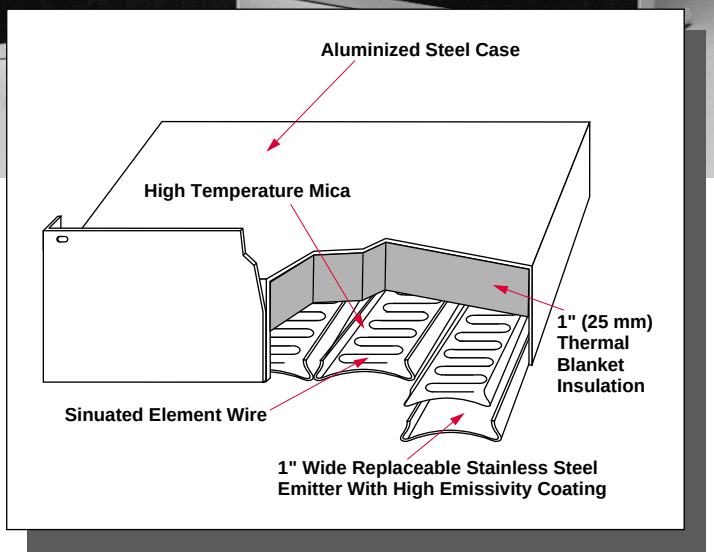

Radiant Heaters

RAYMAX 1120

Applications and Technical Data

Face Temperature: 1100°F maximum (595°C)

Wattage: Watt densities up to 20 W/in² (3 W/cm²)

Standard Voltage: 120, 240, 480V~(ac), 1-phase. Balanced 3-phase available on unit widths divisible by three. Other voltages are available.

Terminals: Non-standard locations are available. Please specify.

Standard Dimensions: ±1/16 inch (0.0625 mm)

Typical Peak Energy Wavelength: 3-3.5 microns

Specifications

Heater Dimensions	Min.	Max.	Increments
Width: inches (mm)	1 (25.4)	36 (914.4)	1 (25.4)
Length: inches (mm)	6 (152.4)	70 (1778)	any
Area: in² (cm²)	6 (38.7)	864 (5574.2)	any

Note: Less than maximum length X width may exceed maximum area.

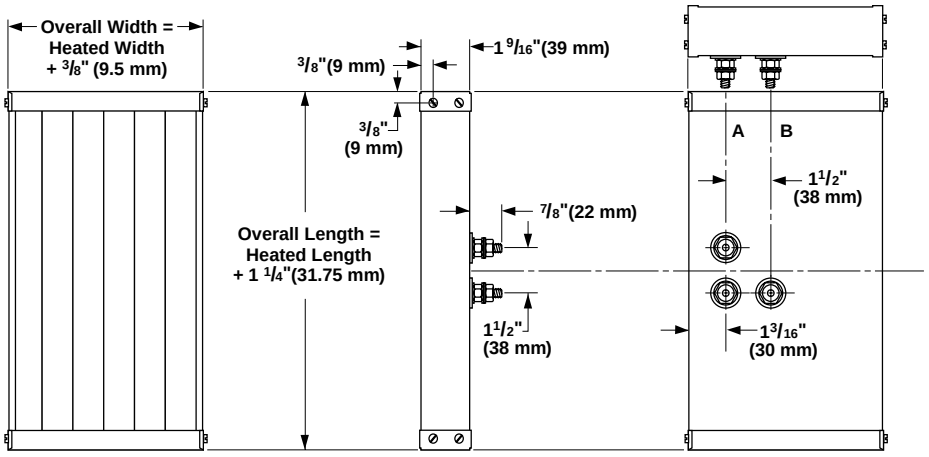

F.O.B.: St. Louis, Missouri

Panel Overall Size in (mm)		Panel Heated Size in (mm)				Watt Density		Approx. Net Wt.		Code
Width	Length	Width	Length	Volts	Watts	W/in²	(W/cm²)	lbs (kg)	Availability	No.
6 3/8 (161.93)	25 1/4 (641.35)	6 (152.4)	24 (609.6)	240	2880	20	(3.1)	6 (2.7)	Stock	**P0624AX050**
12 3/8 (314.33)	13 1/4 (336.55)	12 (304.8)	12 (304.8)	240	2880	20	(3.1)	6 (2.7)	Stock	**P1212AX030**
12 3/8 (314.33)	25 1/4 (641.35)	12 (304.8)	24 (609.6)	240	5760	20	(3.1)	12 (5.4)	Stock	**P1224AX062**
12 3/8 (314.33)	49 1/4 (1250.95)	12 (304.8)	48 (1219.2)	480 3-phase	11520	20	(3.1)	24 (10.8)	Stock	**P1248AX073**

Note:
- Panels are equipped with terminal box, thermocouple well with bayonet adaptor and mounting studs.
- Watlow stock radiant panels must be properly applied for safe operation.
- Please consult Watlow with your application before ordering.

How to Order

To order your stock RAYMAX heater, specify:

- RAYMAX 1120
- Quantity
- Watlow code number

If our stock units do not meet your application needs, Watlow can manufacture RAYMAX heaters to your special requirements. For **made-to-order** heaters, specify the following:

- Heated width and length. Three-phase panels must have width divisible by three.
- Total wattage of each panel.
- Exact voltage and phase. A five percent variation in voltage at the oven will cause a 10 percent variation in power.
- Zoning. Indicate dimensions and wattage of each zone.
- Mounting legs or mounting studs, if desired. For studs, give number and location or indicate standard location.
- Terminal location if non-standard.
- Terminal box or wire raceway, if required.

Supplying a drawing with an order or request for quotation can be very helpful in clarifying design information.

Availability

Stock: Next day shipment

Made-to-Order: Consult Watlow

Radiant Heaters

RAYMAX® 1220 and 2030

Easy to install and capable of high surface temperatures, the RAYMAX® 1220 and 2030 are ideal for many process heating applications requiring “hot face” temperatures above 1000°F (540°C).

Each unit consists of a ceramic fiber heater mounted in a 2.5 inch (64 mm) deep sheet metal case that provides thermal insulation. The case includes post terminals for electrical connections and provides a mounting system that can be used with virtually any flat ceramic fiber unit, whether it is a stock, standard or custom size. Since any of the flat unit heating element configurations can be used—exposed sinuated, embedded coil or foil elements—watt density and temperature capabilities can be tailored to meet a specific radiant application.

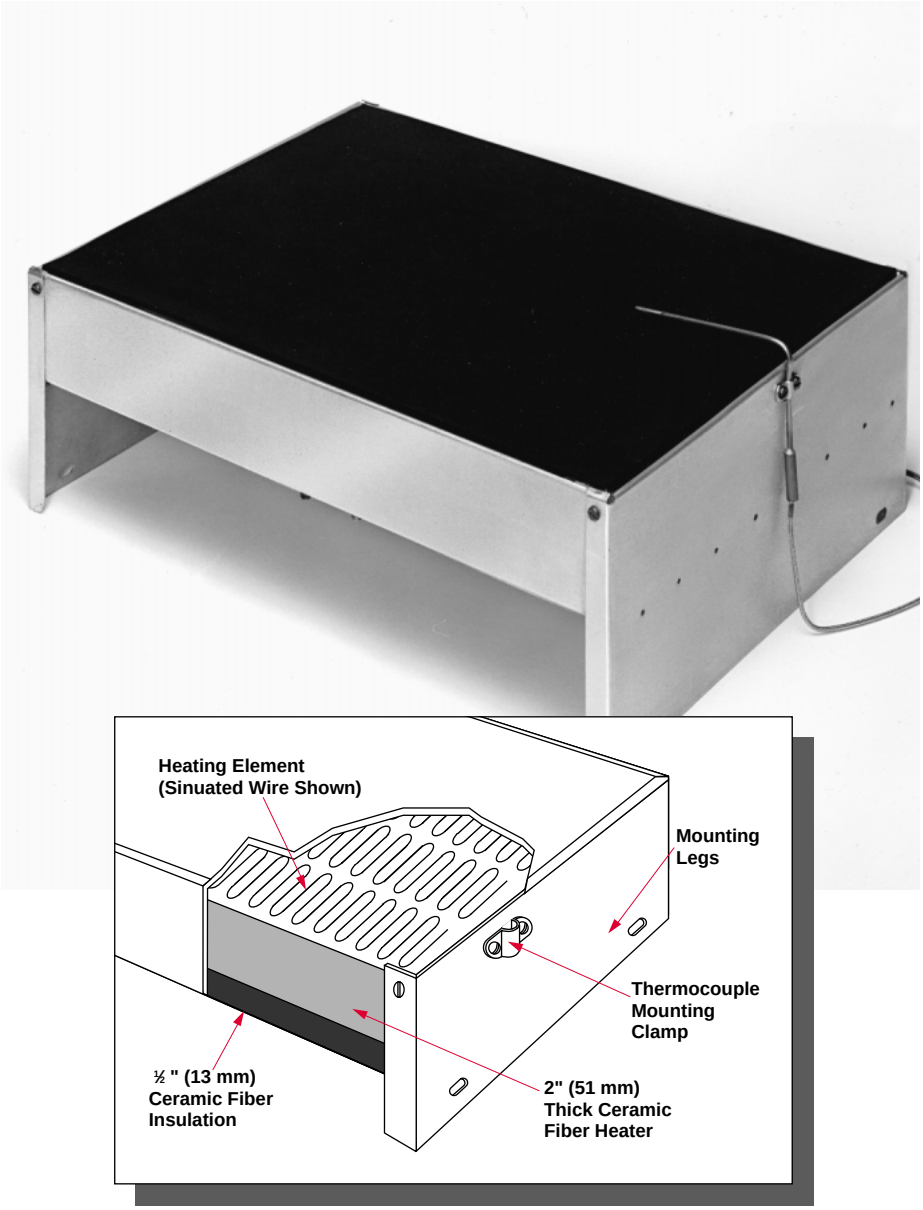

Performance Capabilities

- RAYMAX 2030 (uses sinuated or coil elements): temperatures up to 2000°F (1095°C); watt densities up to 30 W/in^2 (4.7 W/cm^2)
- RAYMAX 1220 (uses an etched foil element): temperatures up to 1200°F (650°C); watt densities up to 20 W/in^2 (3 W/cm^2)

Features and Benefits

- **Lightweight, low mass design** allows fast response to controls.
- **High efficiency** results from high degree of self insulation with 2.5 inch (64 mm) thick mounting case.
- **Adaptable** with any stock or standard sized flat ceramic fiber units.
- **Thermocouple mounting clamp** makes process system control easier.
- **Aluminized steel case** can handle temperatures up to 1100°F (595°C). Other case materials are available, depending on the expected exposure of the case to other operating conditions.
- **Special hot face** heating patterns can be designed specifically for an application using an etched foil RAYMAX 1220.

Applications

- Conveyor furnaces
- High temperature vessel heating
- Tempering and annealing processes for glass, wire, ceramics and metals
- Coating, curing and drying of inks, paints, plastics and films

RAYMAX 1220 and 2030

Applications and Technical Data

Specifications

Weight: Under 6.5 lbs/ft^2 (31.75 kg/m^2)

Voltage and Wattage: Ratings are based on the ceramic fiber heater module which is mounted in the case. Up to 600V~(ac) is possible.

Terminals: Terminals are ¼-20 threaded studs. Two terminals plus ground for single-phase, and three terminals plus ground for three-phase, are standard. These will be located on the center line of the length unless otherwise specified. Terminals can be located anywhere along lines A and B (see illustration to the right), but not closer than two inches (51 mm) to the case ends.

Mounting Legs: One inch (25 mm) standard; three inches (76 mm) optional from stock. For made-to-order units, mounting legs can be supplied in any incremental length **L** from ½ inch (13 mm) to three inches (76 mm). No slots are provided in legs less than one inch long.

Heater Dimensions	Min.	Max.	Increments
Width: inches (mm)	2 (51)	30 (760)	Any
Length: inches (mm)	6 (152)	52 (1320)	Any

Note: Units will be ¼ inch (6 mm) wider than the nominal size of the ceramic fiber heater. Overall length is equal to heater length, but thermocouple clamp not included in length.

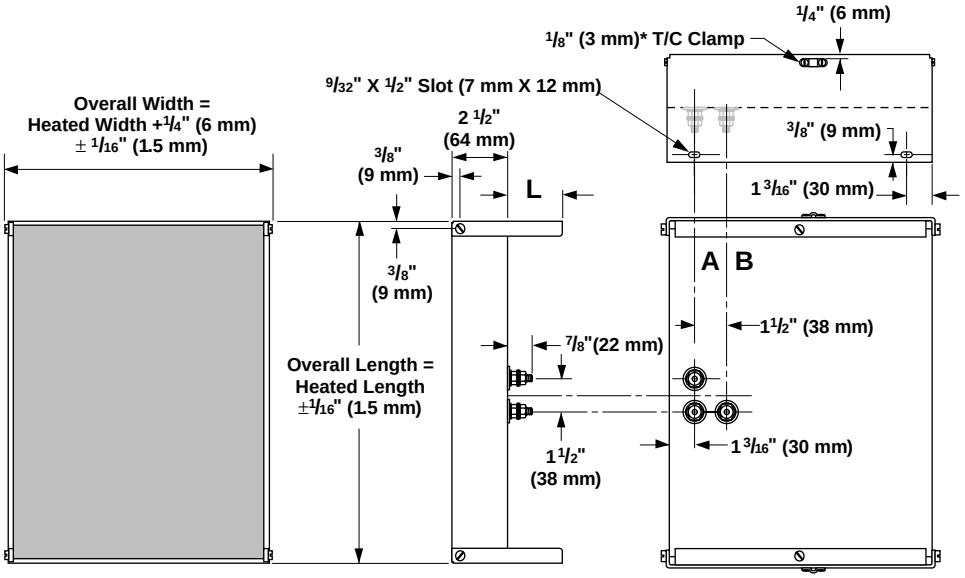

Application Hints

A thermocouple mounting clamp will be provided on one end of the case, with holes on both ends for alternate locations. The standard clamp can be used with ⅛ inch (3 mm) O.D. sheath thermocouples. The standard clamp is 3/16 inch (4.8 mm) high, but can be removed for flush mounting*.

The maximum recommended surface temperature of the heater is based on the rating of the ceramic fiber heater module. This can vary from 2000°F (1095°C) at lower watt densities, to higher watt densities at reduced surface temperatures. Note that maximum wattages cannot be achieved at the maximum temperatures simultaneously.

* ⅛ inch (3 mm) is standard. 3/16 inch (4.8 mm) and ¼ inch (6 mm) are available upon request.

Options

Several options are available with RAYMAX 1220 and 2030 models. From the following list, the first four are illustrated on **pages 204 to 205**. Consult Watlow for more information on any of the options.

- Single-phase non-standard location power terminals
- Terminal box
- Zoning
- Mounting studs and legs
- Three-phase construction
- Thermocouple mounting tubes
- Alternate case materials

See ceramic fiber heaters, pages 155 and 158, for a complete listing of all the flat panel sizes available.

Radiant Heaters

F.O.B.: Columbia, Missouri

RAYMAX 1220

Ceramic Fiber, with Foil Element

Panel Overall Size ± 1/16 in (1.5mm)		Panel Nominal Heated Size in (mm)		Volts	Watts	Watt Density		Approx. Net Wt.		Availability	Code No.
Width	Length ①	Width	Length			W/in²	(W/cm²)	lbs	(kg)		
4 ¼ (110)	12 (305)	4 (102)	12 (305)	120	950	19.8	(3.1)	2.8	(1.3)	Stock	**VP504A12F**
4 ¼ (110)	24 (610)	4 (102)	24 (610)	240	1900	19.8	(3.1)	4.8	(2.2)	Stock	**VP504A24F**
8 ¼ (210)	12 (305)	8 (200)	12 (305)	240	1900	19.8	(3.1)	4.5	(2.1)	Stock	**VP508A12F**
8 ¼ (210)	24 (610)	8 (200)	24 (610)	240	3800	19.8	(3.1)	7.7	(3.5)	Standard	**VP508A24F**

All units in this table are suitable for use up to 1200°F (650°C) maximum surface temperature.

① Thermocouple clasp is not included in the length.

RAYMAX 2030

Ceramic Fiber, with Sinuated Element

Nominal Heated Width		Nominal Heated Length		Volts	Watts	Watt Density		Approx Net Wt.		Availability	Code No.
in	(mm)	in	(mm)			W/in²	(W/cm²)	lbs	(kg)		
4	(102)	6	(152)	60	500	20.8	(3.2)	1.9	(0.9)	Standard	**VP504A06T**
		12	(305)	120	1050	21.9	(3.4)	3.1	(1.4)	Stock	**VP504A12T**
		18	(460)	120	1500	20.8	(3.2)	4.1	(1.9)	Standard	**VP504A18T**
		24	(610)	240	2100	21.9	(3.4)	5.2	(2.4)	Stock	**VP504A24T**
		30	(760)	240	2500	20.8	(3.2)	6.3	(2.9)	Standard	**VP504A30T**
		36	(915)	240	3000	20.8	(3.2)	7.4	(3.3)	Standard	**VP504A36T**
6	(152)	6	(152)	60	650	18.1	(2.8)	2.4	(1.1)	Standard	**VP506A06T**
		12	(305)	120	1250	17.4	(2.7)	4.1	(1.9)	Standard	**VP506A12T**
		18	(460)	240	2000	18.5	(2.9)	5.8	(2.6)	Standard	**VP506A18T**
		24	(610)	120② or 240②	2500	17.4	(2.7)	7.4	(3.3)	Assy. Stock②	**VP506A24T②**
		30	(760)	240	3400	18.9	(2.9)	9.0	(4.1)	Standard	**VP506A30T**
		36	(915)	240	4000	18.5	(2.9)	10.6	(4.8)	Standard	**VP506A36T**
8	(205)	12	(305)	120	1800	18.8	(2.9)	4.7	(2.4)	Stock	**VP508A12T**
		18	(460)	240	3000	20.8	(3.2)	7.4	(3.3)	Stock	**VP508A18U**
		24	(610)	240	3600	18.8	(2.9)	9.5	(4.3)	Stock	**VP508A24T**
		30	(760)	240	5000	20.8	(3.2)	11.7	(5.3)	Stock	**VP508A30T**
		36	(915)	240	6000	20.8	(3.2)	13.9	(6.3)	Standard	**VP508A36T**

CONTINUED

All units in this table are suitable for use up to 1800°F (982°C) maximum surface temperature.

② Stocked ceramic fiber heaters can be used to make this RAYMAX 2030 heater panel. These are **assembly stock** units. For those units rated at 120V~(ac) (code numbers ending in ...T), an alternate 240V~(ac) unit (code numbers ending in ...U) is available as a standard design. Flat heaters on **page 158** can be used in these RAYMAX cases.

Radiant Heaters

F.O.B: Columbia, Missouri

RAYMAX 2030

Nominal Heated Width in	(mm)	Nominal Heated Length in	(mm)	Volts	Watts	Watt Density W/in²	(W/cm²)	Approx Net Wt. lbs	(kg)	Availability	Code No.
10	(255)	12	(305)	120	2000	16.7	(2.6)	6.3	(2.9)	Standard	**VP510A12T**
		18	(460)	240	3600	20.0	(3.1)	9.0	(4.1)	Standard	**VP510A18T**
		24	(610)	240②	4500	17.9	(2.8)	11.7	(5.3)	Assy. Stock②	**VP510A24T②**
		30	(760)	240	6000	20.0	(3.1)	14.4	(6.5)	Standard	**VP510A30T**
		36	(915)	240	7000	19.4	(3.0)	17.1	(7.8)	Standard	**VP510A36T**
12	(305)	12	(305)	120② or 240②	2500	17.4	(2.7)	7.4	(3.3)	Assy. Stock②	**VP512A12T②**
		18	(460)	240	4000	18.5	(2.9)	10.6	(4.8)	Standard	**VP512A18T**
		24	(610)	240②	6000	20.8	(3.2)	13.9	(6.3)	Assy. Stock②	**VP512A24T②**
		30	(760)	240	7200	20.0	(3.1)	17.1	(7.8)	Standard	**VP512A30T**
		36	(915)	240	8400	19.4	(3.0)	20.3	(9.2)	Standard	**VP512A36T**
14	(355)	12	(305)	240	3500	20.8	(3.2)	8.5	(3.8)	Stock	**VP514A12T**
		18	(460)	240	4900	19.4	(3.0)	12.2	(5.5)	Standard	**VP514A18T**
		24	(610)	240	7000	20.8	(3.2)	16.0	(7.3)	Standard	**VP514A24T**
		30	(760)	240	8400	20.0	(3.1)	19.8	(9.0)	Standard	**VP514A30T**
		36	(915)	240/240③	9800	19.4	(3.0)	23.6	(10.7)	Standard	**VP514A36T**
16	(405)	12	(305)	240	3600	18.8	(2.9)	9.5	(4.3)	Standard	**VP516A12T**
		18	(460)	240	5700	19.8	(3.1)	13.9	(6.3)	Standard	**VP516A18T**
		24	(610)	240	7100	18.5	(2.9)	18.2	(8.2)	Standard	**VP516A24T**
		30	(760)	240/240③	9600	20.0	(3.1)	22.5	(10.2)	Standard	**VP516A30T**
		36	(915)	240/240③	11500	20.0	(3.1)	26.8	(12.2)	Standard	**VP516A36T**

All units in this table are suitable for use up to 1800°F (982°C) maximum surface temperature.

② Stocked ceramic fiber heaters can be used to make this RAYMAX 2030 heater panel. These are **assembly stock** units. For those units rated at 120V~(ac) (code numbers ending in ...T), an alternate 240V~(ac) (code numbers ending in ...U) unit is available as a standard design.

③ Dual element unit. Four power terminals provided.

How to Order

To order a **stock, assembly stock,** or **standard** heater, specify:

- RAYMAX 1220 or 2030
- Quantity
- Watlow code number
- Mounting studs, if desired

Note: One-inch mounting legs are provided. Three-inch legs are available from stock upon request.

If stock or standard units do not meet application needs, Watlow can manufacture radiant heaters to fit special requirements.

For **made-to-order** units, please specify, in addition to previous information:

- Heated width and length, and overall size
- Total wattage
- Voltage, and phases or zones required
- Load temperature expectations
- Mounting studs, if desired
- Mounting legs and leg height, if desired (one inch is provided unless otherwise specified)
- Location of terminals
- Terminal box, if desired
- Thermowell (specify size and location if standard end clamp is not sufficient)

Availability

Stock: Shipment in one to two days

Assembly Stock: Shipment in two weeks

Standard: Shipment in three to four weeks

Made-to-Order: Consult Watlow

Radiant Heaters

RAYMAX® 1330

The RAYMAX® 1330 is the only radiant heater that features specially insulated heater emitter strips for higher performance. Watlow developed a unique compacted mineral insulation to electrically insulate the element wire, with a result of superior heat transfer and higher operating capabilities.

Because of its rugged stainless steel construction, the RAYMAX 1330 will last longer. And this heater features a high emissivity black coating and a uniform, full surface heat source for better efficiency.

Performance Capabilities

- Maximum face temperature: 1300°F (700°C)
- Maximum watt density: 30 W/in^2 (4.7 W/cm^2)
- Typical peak energy wavelength: 3-3.6 microns

Features and Benefits

- **Field replaceable emitter strips** allow you to avoid the cost of buying a whole new radiant heater later on.
- **Rugged metal construction** protects heater from contaminants.
- **Accurate, responsive** face temperature sensing options are available.
- **No reflectors** to be cleaned or replaced.
- **No fragile glass** or ceramic elements to worry about.
- **Backside insulation** is one inch (25 mm) thick, resulting in better heating efficiency.

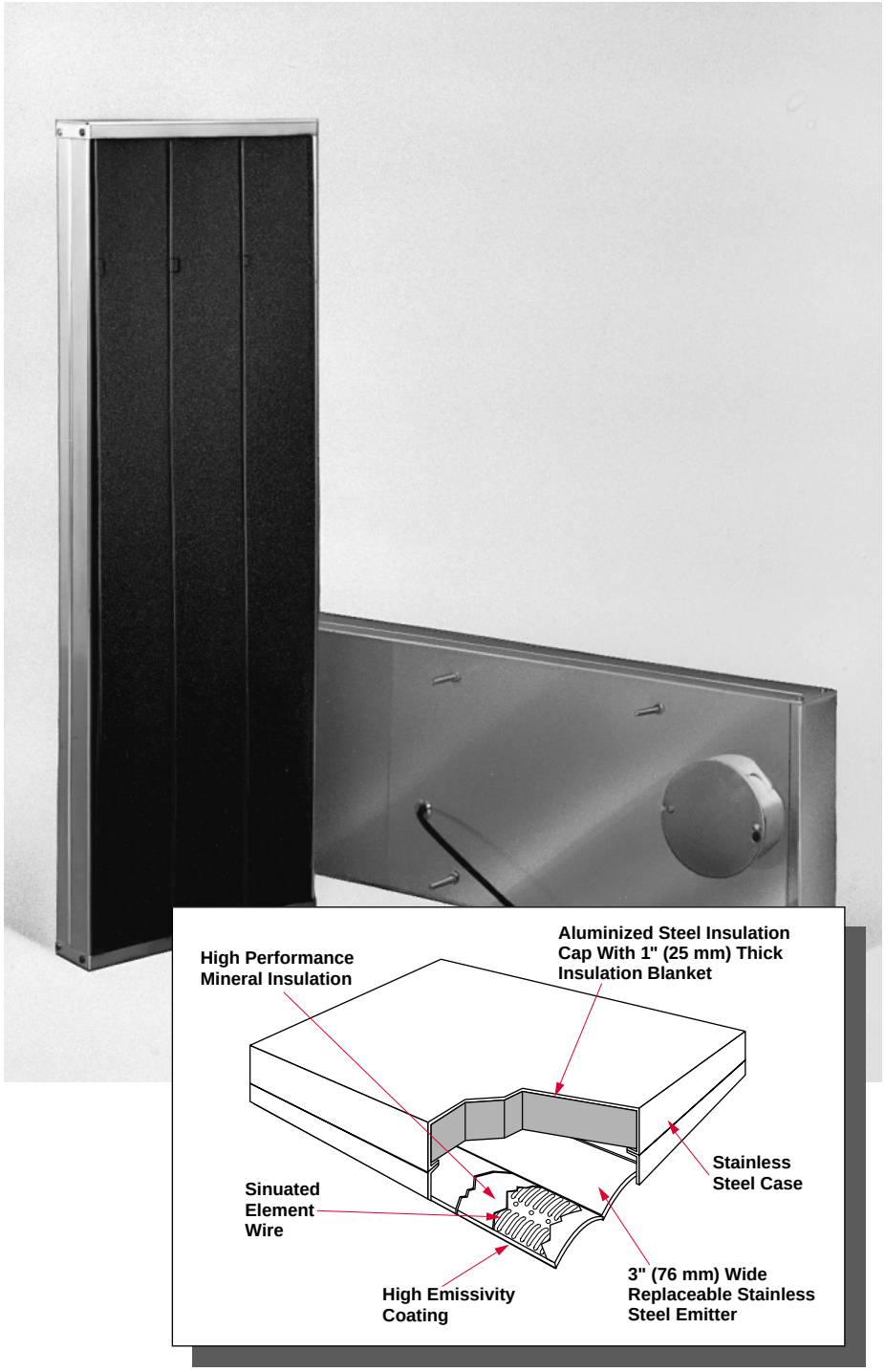

Applications

- Thermoforming plastics and composites
- Circuit board soldering
- Heat shrinking of plastic

- Terminal box
- Thermowell
- Thermocouple welded to hot face
- Mounting studs

RAYMAX 1330

Applications and Technical Data

Sizes and Ratings

Thickness: 2.562 inches (65 mm)

Volts: 120, 240, 480V~(ac), 1-phase. 3-phase available on units with thee or six emitters.

Maximum Watt Density: 30 W/in^2 (4.7 W/cm^2)

Maximum Face Temperature: 1300°F (700°C)

Typical Peak Energy Wavelength: 3 microns

Heater Dimensions	Minimum	Maximum	Increments
Heated width:	3.187 in (81 mm)	19.125 in (485.77 mm)	3.187 in (81 mm)
Length:	12 in (305 mm)	30.5 in (775 mm)	any

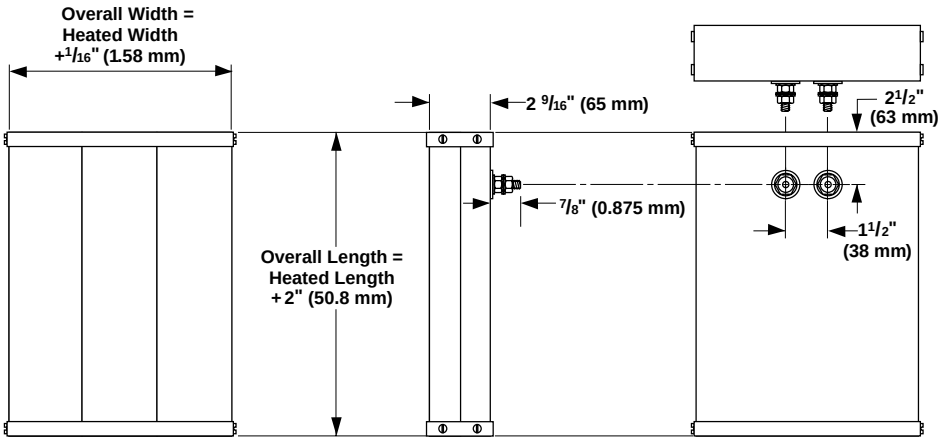

F.O.B.: St. Louis, Missouri

How to Order

The RAYMAX 1330 and radiant band/strip emitters are available **made-to-order** only. It is helpful to have the following information available:

- Heated width and length (or diameter for band emitters)
- Total wattage
- Voltage and phase
- Mounting studs, if desired
- Mounting legs and leg height, if desired
- Terminal location
- Terminal box, if desired
- Thermocouple or thermowell, if desired

Availability

Made-to-Order: Consult Watlow

Radiant Heaters

RAYMAX® 1525

Watlow's RAYMAX® 1525 is a rugged radiant heater with a unique design that allows quick removal and replacement of the element and reflectors. Instead of dismantling the heater, the parts are simply removed from the front. Replacing dirty reflectors often can improve heating efficiency by up to 30 percent.

The RAYMAX 1525 is available with either a fast responding quartz element or an Incoloy®-sheathed WATROD tubular element. Both are supported by stainless steel hardware in an extruded aluminum housing.

All stock units come with 1⅝ inch long, ⅜ inch-16 thread mounting bolts that slide along the heater's length to accommodate mounting considerations.

Performance Capabilities

- Element temperatures to 1600°F (870°C)
- Watt densities measured across the reflector area up to 25 W/in^2 (3.9 W/cm^2)

Features and Benefits

- **Fast and easy replacement** of the tubular element and reflectors for quick servicing.
- **Variety of element styles:** single or dual element, hairpin, liquid tight housing and quartz element.
- **Assembly stock availability** provides quick three-day shipment from order receipt.
- **Optional single end wiring**, available on most units, simplifies installation.
- **Polished aluminum reflector** efficiently directs heat to the work.

Applications

- Drying bulk materials
- Freeze protection
- Space heating
- Process heating
- Warming equipment

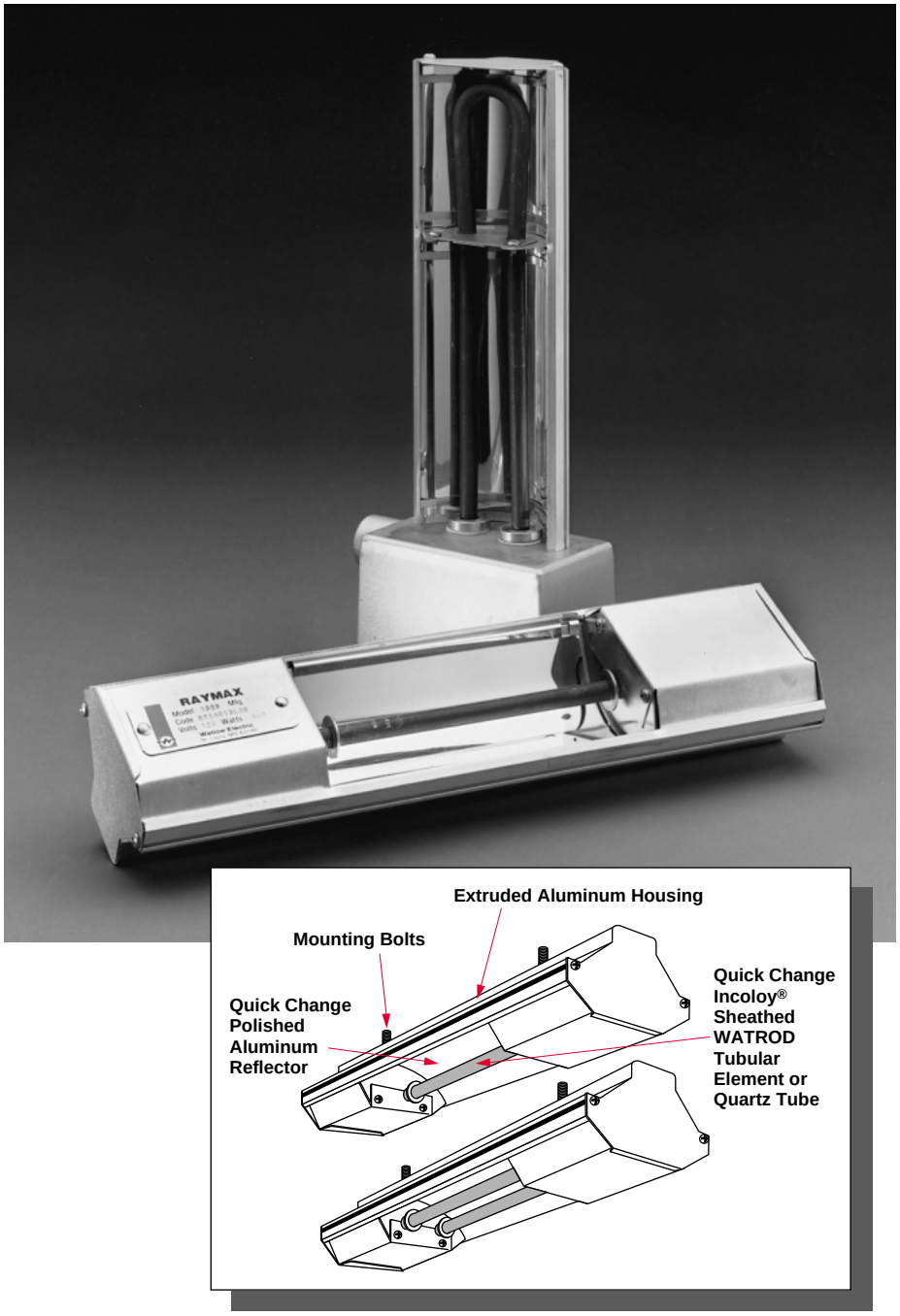

Options

Single End Wiring

Single end wiring permits power leads to be brought into only one end of the unit. Standard units with straight elements must be wired at both ends.

Power Leads

Appropriate power leads come attached to the heating element(s). To order, simply specify **length** and **flexible conduit**, if required.

Protective Grille

A stainless steel grille section that snaps in to reduce the possibility of personnel or product coming in contact with the heating elements.

Incoloy® is a registered trademark of Special Metals Incorporated.

RAYMAX 1525

Options

Continued

Element Styles

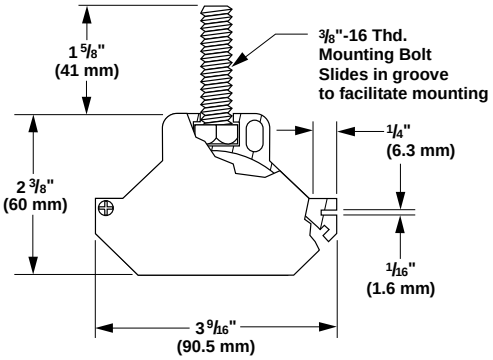

Protective Grille

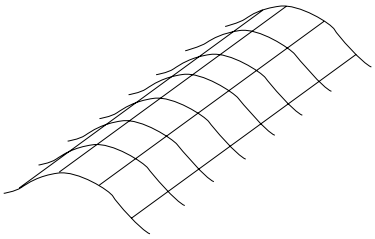

Single and Dual Elements

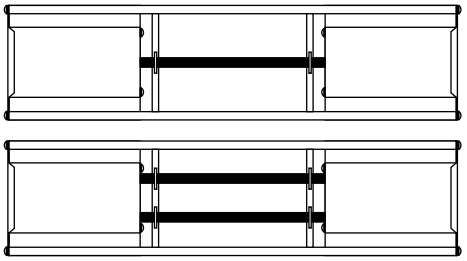

Straight length WATROD tubular elements come in single or dual styles. The dual style produces twice the wattage of the same length single element. Dual elements can also be jumpered to permit single end wiring and operating at twice the rated voltage up to 480V~(ac).

Hairpin Element

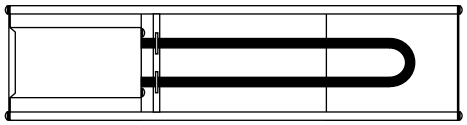

A WATROD hairpin-shaped tubular element provides the convenience of single end wiring and a reduced no-heat area on the non-terminal end.

Liquid Tight Housing

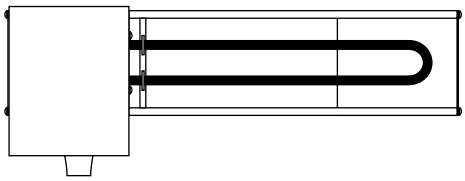

On this style, the hairpin element terminates in a liquid tight housing to permit operation in a hose-down area or exposure to weather. The cast aluminum housing has a ½ inch NPT conduit fitting. The box is 2 13/16 inches x 3⅜ inches x 5¼ inches including conduit hub.

Quartz Tube Element

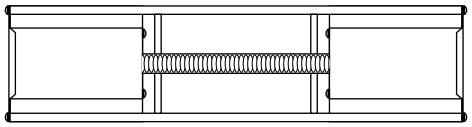

Watlow quartz elements provide the advantage of faster heat-up and cool-down—important when encountering frequent line stoppages. A standard ½ inch (13 mm) diameter quartz tube provides strength and long resistance wire life.

F.O.B.: St. Louis, Missouri

How to Order

To order, specify:

- Watlow code number
- Watts/volts
- Options
- Quantity

If our stock units do not meet your application needs, Watlow can manufacture to meet your special requirements. For **made-to-order** units, please specify:

- Overall or heated length
- Element style
- Volts/watts
- Options
- Quantity

Availability

Assembly Stock: Three working days

Made-to-Order: Consult Watlow

Radiant Heaters

F.O.B.: St. Louis, Missouri

RAYMAX 1525

Single Element

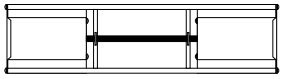

Overall Length in	(mm)	Heated Length in	(mm)	Volts	kW	Approx Net Wt. lbs	(kg)	Availability	Code No.	Replacement Element Code No.	Replacement Reflector Code No.
13 5/8	(345)	7 1/4	(185)	120	0.40	1.9	(0.88)	Assy. Stock	**RT1A013L00**	**RDN10E1**	**RR1013L00**
20 5/8	(510)	13 5/8	(345)	120	0.65	2.7	(1.3)	Assy. Stock	**RT1A020A00**	**RDN16L1**	**RR1020A00**
24 3/8	(620)	16 13/16	(425)	120	0.80	3.2	(1.5)	Assy. Stock	**RT1A024G00**	**RDN21B1**	**RR1024G00**
24 3/8	(620)	16 13/16	(425)	240	0.80	3.2	(1.5)	Assy. Stock	**RT1G024G00**	**RDN21B10**	**RR1024G00**
30 5/8	(780)	22 7/8	(580)	120	1.10	4.0	(1.8)	Assy. Stock	**RT1A030L00**	**RDN27C1**	**RR1030L00**
30 5/8	(780)	22 7/8	(580)	240	1.10	4.0	(1.8)	Assy. Stock	**RT1G030L00**	**RDN27C10**	**RR1030L00**
35 7/8	(910)	27 7/8	(710)	240	1.30	4.7	(2.2)	Assy. Stock	**RT1G035R00**	**RDN32C10**	**RR1035R00**
35 7/8	(910)	27 7/8	(710)	480	1.30	4.7	(2.2)	Assy. Stock	**RT1P035R00**	**RDN32C11**	**RR1035R00**
46 5/8	(1185)	38 5/8	(980)	240	1.80	5.8	(2.7)	Assy. Stock	**RT1G046L00**	**RDN42R10**	**RR1046L00**
46 5/8	(1185)	38 5/8	(980)	480	1.80	5.8	(2.7)	Assy. Stock	**RT1P046L00**	**RDN42R11**	**RR1046L00**
61 3/8	(1560)	53 1/4	(1350)	240	2.50	7.5	(3.4)	Assy. Stock	**RT1G061G00**	**RDN57J10**	**RR1061G00**
61 3/8	(1560)	53 1/4	(1350)	480	2.50	7.5	(3.4)	Assy. Stock	**RT1P061G00**	**RDN57J11**	**RR1061G00**
73 3/4	(1875)	65 5/8	(1650)	240	3.00	9.0	(4.1)	Assy. Stock	**RT1G073N00**	**RDN69E10**	**RR1073N00**
73 3/4	(1875)	65 5/8	(1650)	480	3.00	9.0	(4.1)	Assy. Stock	**RT1P073N00**	**RDN69E11**	**RR1073N00**
85 3/4	(2180)	77 5/8	(1955)	240	3.60	10.2	(4.7)	Assy. Stock	**RT1G085N00**	**RDN81E10**	**RR1085N00**
85 3/4	(2180)	77 5/8	(1955)	480	3.60	10.2	(4.7)	Assy. Stock	**RT1P085N00**	**RDN81E11**	**RR1085N00**

Dual Element

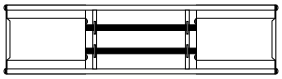

13 5/8	(345)	7 1/4	(185)	120	0.80	2.2	(1.0)	Assy. Stock	**RT2A013L00**	**RDN10E1**	**RR2013L00**
20 5/8	(510)	13 5/8	(345)	120	1.30	2.9	(1.3)	Assy. Stock	**RT2A020A00**	**RDN16L1**	**RR2020A00**
24 3/8	(620)	16 13/16	(425)	120	1.60	3.4	(1.5)	Assy. Stock	**RT2A024G00**	**RDN21B1**	**RR2024G00**
24 3/8	(620)	16 13/16	(425)	240	1.60	3.4	(1.5)	Assy. Stock	**RT2G024G00**	**RDN21B10**	**RR2024G00**
30 5/8	(780)	22 7/8	(580)	120	2.20	4.1	(1.9)	Assy. Stock	**RT2A030L00**	**RDN27C1**	**RR2030L00**
30 5/8	(780)	22 7/8	(580)	240	2.20	4.1	(1.9)	Assy. Stock	**RT2G030L00**	**RDN27C10**	**RR2030L00**
35 7/8	(910)	27 7/8	(710)	240	2.60	4.7	(2.1)	Assy. Stock	**RT2G035R00**	**RDN32C10**	**RR2035R00**
35 7/8	(910)	27 7/8	(710)	480	2.60	4.7	(2.1)	Assy. Stock	**RT2P035R00**	**RDN32C11**	**RR2035R00**
46 5/8	(1185)	38 5/8	(980)	240	3.60	6.0	(2.7)	Assy. Stock	**RT2G046L00**	**RDN42R10**	**RR2046L00**
46 5/8	(1185)	38 5/8	(980)	480	3.60	6.0	(2.7)	Assy. Stock	**RT2P046L00**	**RDN42R11**	**RR2046L00**
61 3/8	(1560)	53 1/4	(1350)	240	5.00	7.7	(3.5)	Assy. Stock	**RT2G061G00**	**RDN57J10**	**RR2061G00**
61 3/8	(1560)	53 1/4	(1350)	480	5.00	7.7	(3.5)	Assy. Stock	**RT2P061G00**	**RDN57J11**	**RR2061G00**
73 3/4	(1875)	65 5/8	(1650)	240	6.00	9.1	(4.1)	Assy. Stock	**RT2G073N00**	**RDN69E10**	**RR2073N00**
73 3/4	(1875)	65 5/8	(1650)	480	6.00	9.1	(4.1)	Assy. Stock	**RT2P073N00**	**RDN69E11**	**RR2073N00**
85 3/4	(2180)	77 5/8	(1955)	240	7.20	10.5	(4.8)	Assy. Stock	**RT2G085N00**	**RDN81E10**	**RR2085N00**
85 3/4	(2180)	77 5/8	(1955)	480	7.20	10.5	(4.8)	Assy. Stock	**RT2P085N00**	**RDN81E11**	**RR2085N00**

Hairpin Element

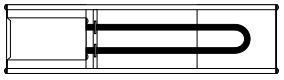

12 3/4	(325)	8 3/8	(210)	120	0.80	2.1	(0.95)	Assy. Stock	**RU1A012N00**	**RDN21B1UAAB**	**RR3012N00**
12 3/4	(325)	8 3/8	(210)	240	0.80	2.1	(0.95)	Assy. Stock	**RU1G012N00**	**RDN21B10UAAA**	**RR3012N00**
15 7/8	(405)	11 7/16	(290)	120	1.10	2.4	(1.1)	Assy. Stock	**RU1A015R00**	**RDN27C1UAAA**	**RR3015R00**
15 7/8	(405)	11 7/16	(290)	240	1.10	2.4	(1.1)	Assy. Stock	**RU1G015R00**	**RDN27C10UAAC**	**RR3015R00**
23 3/4	(605)	19 3/16	(490)	240	1.80	3.3	(1.5)	Assy. Stock	**RU1G023N00**	**RDN42R10UAAC**	**RR3023N00**
23 3/4	(605)	19 3/16	(490)	480	1.80	3.3	(1.5)	Assy. Stock	**RU1P023N00**	**RDN42R11UAAB**	**RR3023N00**
31 1/4	(795)	26 9/16	(675)	240	2.50	4.2	(1.9)	Assy. Stock	**RU1G031E00**	**RDN57J10UAAJ**	**RR3031E00**
31 1/4	(795)	26 9/16	(675)	480	2.50	4.2	(1.9)	Assy. Stock	**RU1P031E00**	**RDN57J11UAAB**	**RR3031E00**
37 1/4	(945)	32 7/16	(825)	240	3.00	4.9	(2.2)	Assy. Stock	**RU1G037E00**	**RDN69E10UAAB**	**RR3037E00**
37 1/4	(945)	32 7/16	(825)	480	3.00	4.9	(2.2)	Assy. Stock	**RU1P037E00**	**RDN69E11UAAB**	**RR3037E00**
43 3/8	(1150)	38 7/16	(975)	240	3.60	5.6	(2.5)	Assy. Stock	**RU1G043G00**	**RDN81E10UAAB**	**RR3043G00**
43 3/8	(1150)	38 7/16	(975)	480	3.60	5.6	(2.5)	Assy. Stock	**RU1P043G00**	**RDN81E11UAAB**	**RR3043G00**

Radiant Heaters

F.O.B.: St. Louis, Missouri

RAYMAX 1525

Hairpin Element with Liquid Tight Housing

Overall Length in	Overall Length (mm)	Heated Length in	Heated Length (mm)	Volts	kW	Approx Net Wt. lbs	Approx Net Wt. (kg)	Availability	Code No.	Replacement Element Code No.	Replacement Reflector Code No.
12 ¾	(325)	8 ⅜	(210)	120	0.80	2.5	(1.1)	Assy. Stock	**RS1A012N00**	**RDN21B1BAAB**	**RR4012N00**
12 ¾	(325)	8 ⅜	(210)	240	0.80	2.5	(1.1)	Assy. Stock	**RS1G012N00**	**RDN21B10BAAA**	**RR4012N00**
15 ⅞	(405)	11 7/16	(290)	120	1.10	2.9	(1.3)	Assy. Stock	**RS1A015R00**	**RDN27C1BAAB**	**RR4015R00**
15 ⅞	(405)	11 7/16	(290)	240	1.10	2.9	(1.3)	Assy. Stock	**RS1G015R00**	**RDN27C10BAAA**	**RR4015R00**
23 ¾	(605)	19 3/16	(490)	240	1.80	3.8	(1.7)	Assy. Stock	**RS1G023N00**	**RDN42R10BAAD**	**RR4023N00**
23 ¾	(605)	19 3/16	(490)	480	1.80	3.8	(1.7)	Assy. Stock	**RS1P023N00**	**RDN42R11BAAD**	**RR4023N00**
31 ¼	(795)	26 9/16	(675)	240	2.50	4.8	(2.2)	Assy. Stock	**RS1G031E00**	**RDN57J10BAAB**	**RR4031E00**
31 ¼	(795)	26 9/16	(675)	480	2.50	4.8	(2.2)	Assy. Stock	**RS1P031E00**	**RDN57J11BAAA**	**RR4031E00**
37 ¼	(945)	32 7/16	(825)	240	3.00	5.5	(2.5)	Assy. Stock	**RS1G037E00**	**RDN69E10BAAD**	**RR4037E00**
37 ¼	(945)	32 7/16	(825)	480	3.00	5.5	(2.5)	Assy. Stock	**RS1P037E00**	**RDN69E11BAAD**	**RR4037E00**
43 ⅜	(1150)	38 7/16	(975)	240	3.60	6.2	(2.8)	Assy. Stock	**RS1G043G00**	**RDN81E10BAAB**	**RR4043G00**
43 ⅜	(1150)	38 7/16	(975)	480	3.60	6.2	(2.8)	Assy. Stock	**RS1P043G00**	**RDN81E11BAAA**	**RR4043G00**

Note: Quartz tube elements must be operated in a horizontal position.

Quartz Tube Element

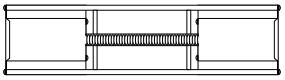

18 1/16	(460)	10	(255)	120	0.50	2.4	(1.1)	Assy. Stock	**RG1A018B00**	**RQB12FA05001B**	**RR5018B00**
26 1/16	(660)	18	(455)	120	0.90	3.2	(1.4)	Assy. Stock	**RG1A026B00**	**RQB20EA09001B**	**RR5026B00**
26 1/16	(660)	18	(455)	240	0.90	3.2	(1.4)	Assy. Stock	**RG1G026B00**	**RQB20EG09001B**	**RR5026B00**
33 1/16	(840)	25	(635)	120	1.25	3.9	(1.7)	Assy. Stock	**RG1A033B00**	**RQB27GA12001B**	**RR5033B00**
33 1/16	(840)	25	(635)	240	1.25	3.9	(1.7)	Assy. Stock	**RG1G033B00**	**RQB27GG12001B**	**RR5033B00**
45 ⅞	(1165)	38	(965)	240	1.90	5.1	(2.3)	Assy. Stock	**RG1G045S00**	**RQB40DG19001B**	**RR5045S00**
45 ⅞	(1165)	38	(965)	480	1.90	5.1	(2.3)	Assy. Stock	**RG1P045S00**	**RQB40DP19001B**	**RR5045S00**
60 ⅞	(1550)	53	(1345)	240	2.65	6.6	(3.0)	Assy. Stock	**RG1G060S00**	**RQB55HG26001B**	**RR5060S00**
60 ⅞	(1550)	53	(1345)	480	2.65	6.6	(3.0)	Assy. Stock	**RG1P060S00**	**RQB55HP26001B**	**RR5060S00**

F.O.B.: Hannibal, Missouri

Tubular Replacement Elements for Reflector Style Radiant Heaters

The following tubular radiant heating elements are available for replacing popular non-Watlow radiant elements.

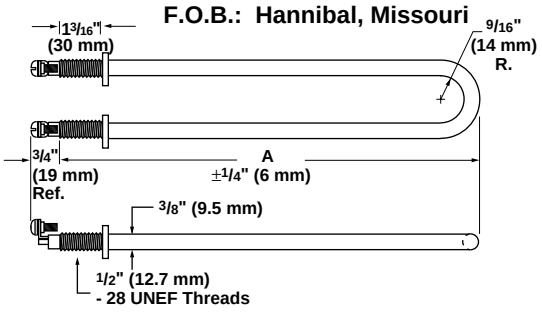

Hairpin (U-Shaped) Element With Liquid Tight Bulkheads Stock Chart

Hairpin A Dimension in	Hairpin A Dimension (mm)	Volts	Watts	Approx. Net Wt. oz	Approx. Net Wt. (g)	Availability	Chromalox® PCN	Chromalox® Catalog No.	Watlow Code No.
10 5/16	(266)	120	800	6	(170)	Assy. Stock	106673	UTU-2LT	**RDN21B1B**
10 5/16	(266)	240	800	6	(170)	Assy. Stock	106681	UTU-2LT	**RDN21B10B**
13 5/16	(344)	120	1100	8	(225)	Assy. Stock	106690	UTU-3LT	**RDN27C1B**
13 5/16	(344)	240	1100	8	(225)	Assy. Stock	106702	UTU-3LT	**RDN27C10B**
21 3/16	(541)	240	1800	13	(370)	Assy. Stock	106710	UTU-4LT	**RDN42R10B**
21 3/16	(541)	480	1800	13	(370)	Assy. Stock	106729	UTU-4LT	**RDN42R11B**
28 ½	(728)	240	2500	16	(455)	Assy. Stock	106737	UTU-5LT	**RDN57J10B**
28 ½	(728)	480	2500	16	(455)	Assy. Stock	106745	UTU-5LT	**RDN57J11B**
34 ⅜	(878)	240	3000	19	(540)	Assy. Stock	106753	UTU-6LT	**RDN69E10B**
34 ⅜	(878)	480	3000	19	(540)	Assy. Stock	106761	UTU-6LT	**RDN69E11B**
40 ⅜	(1030)	240	3600	22	(625)	Assy. Stock	106770	UTU-7LT	**RDN81E10B**
40 ⅜	(1030)	480	3600	22	(625)	Assy. Stock	106788	UTU-7LT	**RDN81E11B**

Radiant Heaters

F.O.B.: Hannibal, Missouri

RAYMAX 1525

Tubular Replacement Elements for Reflector Style Radiant Heaters

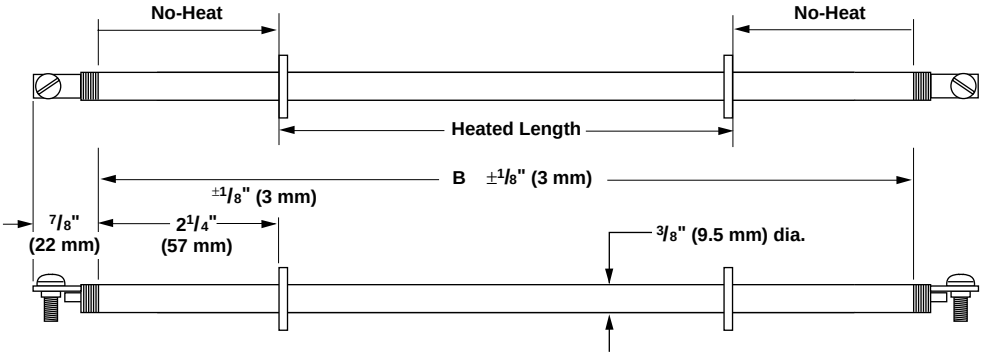

Straight Element Stock Chart

Sheath B Dimension inch	(mm)	Heated Length inch	(mm)	No-Heat Length inch	(mm)	Volts	Watts	Approx. Net wt. oz.	(g)	Availability	Chromalox PCN	Chromalox Catalog No.	Watlow Code No.
10 1/4	(260)	7 1/4	(184)	1 1/2	(38)	120	400	3	(85)	Assy. Stock	147766	RTU-2063AX35	**RDN10E1**
16 5/8	(422)	13 5/8	(346)	1 1/2	(38)	120	650	5	(140)	Assy. Stock	147774	RTU-2063AX29	**RDN16L1**
21 1/16	(535)	16 13/16	(409)	2 1/8	(54)	120	800	6	(170)	Assy. Stock	106112	RTU-2083A	**RDN21B1**
21 1/16	(535)	16 13/16	(409)	2 1/8	(54)	208	800	6	(170)	Standard	106120	RTU-2083AV	**RDN21B2**
21 1/16	(535)	16 13/16	(409)	2 1/8	(54)	240	800	6	(170)	Assy. Stock	106139	RTU-2083A	**RDN21B10**
21 1/16	(535)	16 13/16	(409)	2 1/8	(54)	277	800	6	(170)	Standard	106147	RTU-2083AV	**RDN21B4**
27 1/8	(688)	22 7/8	(580)	2 1/8	(54)	120	1100	8	(225)	Assy. Stock	106155	RTU-3113A	**RDN27C1**
27 1/8	(688)	22 7/8	(580)	2 1/8	(54)	208	1100	8	(225)	Standard	106163	RTU-3113AV	**RDN27C2**
27 1/8	(688)	22 7/8	(580)	2 1/8	(54)	240	1100	8	(225)	Assy. Stock	106171	RTU-3113A	**RDN27C10**
27 1/8	(688)	22 7/8	(580)	2 1/8	(54)	277	1100	8	(225)	Standard	106180	RTU-3113AV	**RDN27C4**
32 1/8	(816)	27 7/8	(580)	2 1/8	(54)	240	1300	9	(255)	Assy. Stock	108409	RTU-3133A	**RDN32C10**
32 1/8	(816)	27 7/8	(580)	2 1/8	(54)	480	1300	9	(255)	Assy. Stock	108396	RTU-3133A	**RDN32C11**
42 7/8	(1090)	38 5/8	(905)	2 1/8	(54)	208	1800	13	(370)	Standard	106198	RTU-4183AV	**RDN42R2**
42 7/8	(1090)	38 5/8	(905)	2 1/8	(54)	240	1800	13	(370)	Assy. Stock	106200	RTU-4183A	**RDN42R10**
42 7/8	(1090)	38 5/8	(905)	2 1/8	(54)	277	1800	13	(370)	Standard	106219	RTU-3133AV	**RDN42R4**
42 7/8	(1090)	38 5/8	(905)	2 1/8	(54)	480	1800	13	(370)	Assy. Stock	106227	RTU-3133A	**RDN42R11**
57 1/2	(1460)	53 1/4	(1350)	2 1/8	(54)	208	2500	16	(455)	Standard	106235	RTU-5253AV	**RDN57J2**
57 1/2	(1460)	53 1/4	(1350)	2 1/8	(54)	240	2500	16	(455)	Assy. Stock	106243	RTU-5253A	**RDN57J10**
57 1/2	(1460)	53 1/4	(1350)	2 1/8	(54)	277	2500	16	(455)	Standard	106251	RTU-5253AV	**RDN57J4**
57 1/2	(1460)	53 1/4	(1350)	2 1/8	(54)	480	2500	16	(455)	Assy. Stock	106260	RTU-5253A	**RDN57J11**
69 1/4	(1760)	65	(1650)	2 1/8	(54)	208	3000	19	(540)	Standard	106278	RTU-6303AV	**RDN69E2**
69 1/4	(1760)	65	(1650)	2 1/8	(54)	240	3000	19	(540)	Assy. Stock	106286	RTU-6303A	**RDN69E10**
69 1/4	(1760)	65	(1650)	2 1/8	(54)	277	3000	19	(540)	Standard	106294	RTU-6303AV	**RDN69E4**
69 1/4	(1760)	65	(1650)	2 1/8	(54)	480	3000	19	(540)	Assy. Stock	106307	RTU-6303A	**RDN69E11**
81 1/4	(2065)	77	(1955)	2 1/8	(54)	208	3600	22	(625)	Standard	106315	RTU-7363AV	**RDN81E2**
81 1/4	(2065)	77	(1955)	2 1/8	(54)	240	3600	22	(625)	Assy. Stock	106323	RTU-7363A	**RDN81E10**
81 1/4	(2065)	77	(1955)	2 1/8	(54)	277	3600	22	(625)	Standard	106331	RTU-7363AV	**RDN81E4**
81 1/4	(2065)	77	(1955)	2 1/8	(54)	480	3600	22	(625)	Assy. Stock	106340	RTU-7363A	**RDN81E11**
109 1/4	(2775)①	105	(2665)	2 1/8	(54)	240	4000	32	(905)	Standard	106358	RTU-7303AX10	**RDN109E10**
134 1/2	(3415)①	127 3/4	(3245)	3 3/8	(85)	240	5000	37	(1050)	Standard	106366	RTU-7303AX13	**RDN134J10**
153 3/8	(3895)①	145 7/8	(3700)	4	(101)	240	5500	40	(1135)	Standard	106374	RTU-7303AX9A	**RDN153R10**
179 1/4	(4550)①	171 1/4	(4350)	4	(101)	240	6500	51	(1445)	Standard	106382	RTU-7363AX38	**RDN179E10**

Radiant Heaters

F.O.B.: Hannibal, Missouri

RAYMAX 1525

Tubular Replacement Elements for Reflector Style Radiant Heaters

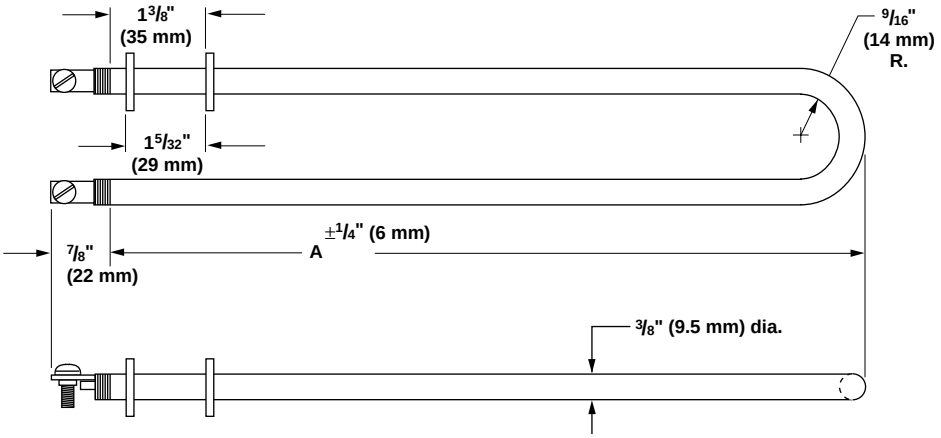

Hairpin (U-Shaped) Element Stock Chart

Hairpin A Dimension in	(mm)	Volts	Watts	Approx. Net Wt. oz	(g)	Availability	Chromalox® PCN	Chromalox® Catalog No.	Watlow Code No.
10 ½	(266)	120	800	6	(170)	Assy. Stock	106438	UTU-2	**RDN21B1U**
10 ½	(266)	240	800	6	(170)	Assy. Stock	106454	UTU-2	**RDN21B10U**
10 ½	(266)	277	800	6	(170)	Standard	106462	UTU-2V	**RDN21B4U**
13 9/16	(344)	120	1100	8	(225)	Assy. Stock	106470	UTU-3	**RDN27C1U**
13 9/16	(344)	240	1100	8	(225)	Assy. Stock	106497	UTU-3	**RDN27C10U**
13 9/16	(344)	277	1100	8	(225)	Standard	106500	UTU-3V	**RDN27C4U**
21 5/16	(541)	208	1800	13	(370)	Standard	106518	UTU-4V	**RDN42R2U**
21 5/16	(541)	240	1800	13	(370)	Assy. Stock	106526	UTU-4	**RDN42R10U**
21 5/16	(541)	480	1800	13	(370)	Assy. Stock	106542	UTU-4	**RDN42R11U**
28 11/16	(728)	208	2500	16	(455)	Standard	106550	UTU-5V	**RDN57J2U**
28 11/16	(728)	240	2500	16	(455)	Assy. Stock	106569	UTU-5	**RDN57J10U**
28 11/16	(728)	277	2500	16	(455)	Standard	106577	UTU-5V	**RDN57J4U**
28 11/16	(728)	480	2500	16	(455)	Assy. Stock	106585	UTU-5	**RDN57J11U**
34 9/16	(878)	240	3000	19	(540)	Assy. Stock	106606	UTU-6	**RDN69E10U**
34 9/16	(878)	480	3000	19	(540)	Assy. Stock	106622	UTU-6	**RDN69E11U**
40 9/16	(1030)	240	3600	22	(625)	Assy. Stock	106649	UTU-7	**RDN81E10U**
40 9/16	(1030)	277	3600	22	(625)	Standard	106657	UTU-7V	**RDN81E4U**
40 9/16	(1030)	480	3600	22	(625)	Assy. Stock	106665	UTU-7	**RDN81E11U**

Chromalox® is a registered trademark of Emerson Electric Co.

How to Order

For units listed in the stock charts, please specify:

- Watlow code number
- Volts/watts
- Style (straight length, hairpin or hairpin with bulkheads)
- Quantity

If our stock elements do not meet your needs, Watlow can provide a **made-to-order** unit.

Details on constructions, materials and options are contained in ***Tubular and Process Assemblies***—WATROD Heating Elements, **pages 273 to 295**. For **made-to-order** units, please specify:

- Volts/watts
- Sheath material and diameter
- Sheath length and no-heat length
- Terminations or terminal pin length
- Bend configuration, if applicable
- Mounting method
- Quantity

Availability

Assembly Stock: Three to five days

Standard: 10 working days

Modified Stock ①: Five to seven working days

Made-to-Order: Four to six weeks

① Assembly Stock with catalog options.

Radiant Heaters

RAYMAX® 1626

Watlow's RAYMAX® 1626 quartz tube panel is a fast responding and very efficient source of radiant thermal energy. With heat-up and cool down capabilities of 40 to 50 seconds, the quartz heater is ideal for use in operations where frequent line stoppages are anticipated or immediate heat-up and cool-down is necessary. Custom sizes are available up to 27 inches wide in three inch increments and 70 inches long.

Performance Capabilities

- Watt densities to 20 W/in^2 (3.1 W/cm^2) measured across the reflector area
- Element temperatures to 1700°F (930°C)

Features and Benefits

- **Quartz tubes and reflectors are easy to replace** from front of heater for less downtime.
- **Polished parabolic aluminum reflectors** direct radiant energy from the back for efficient heating.
- **Little residual heat** to reduce possibility of product damage during line stoppage.
- **Fast heat-up, cool down allows heater turn off during gaps in production** for more energy savings.

Applications

- Heating plastic films
- Ink drying
- Coating curing
- Fusing powder coating
- Activating adhesives

Options

Thermocouple clamp is located on the end cap. The clamp is used to hold a one eighth inch diameter thermocouple (not included) in front of the reflector to intercept the radiated energy to provide a control temperature. The thermocouple should be painted with a high temperature black paint to improve absorption.

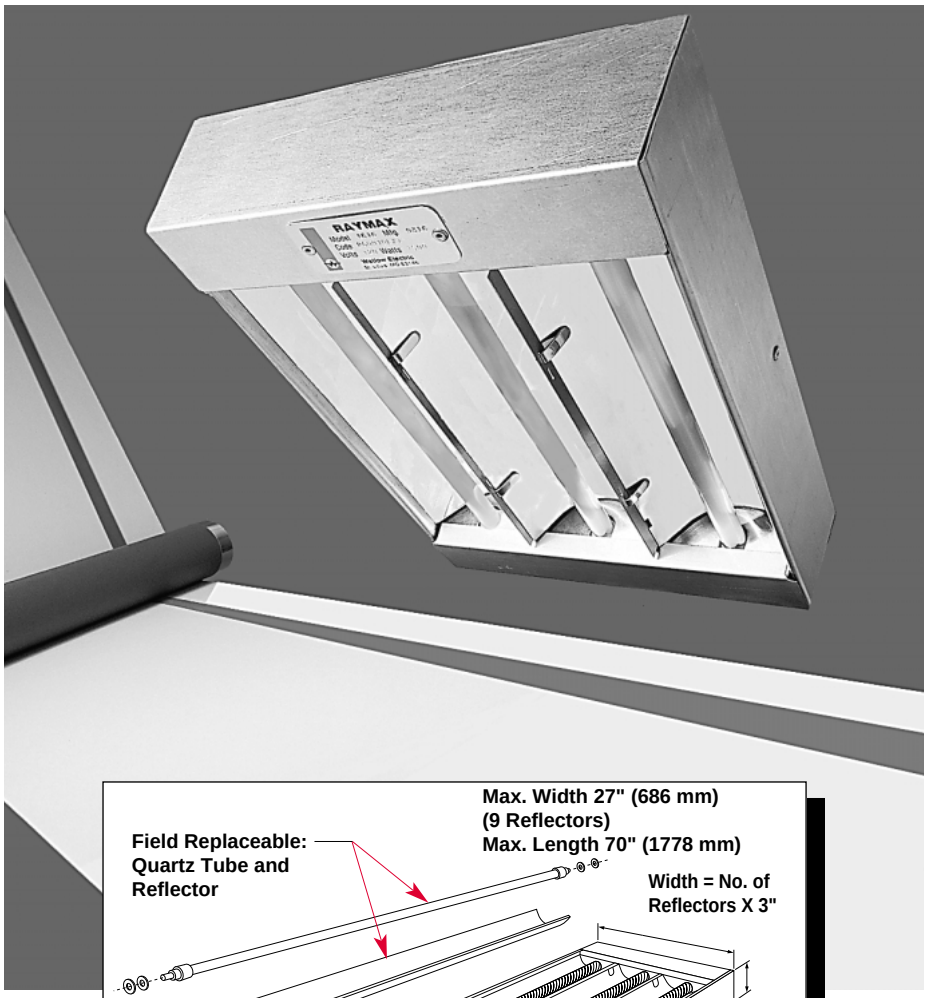

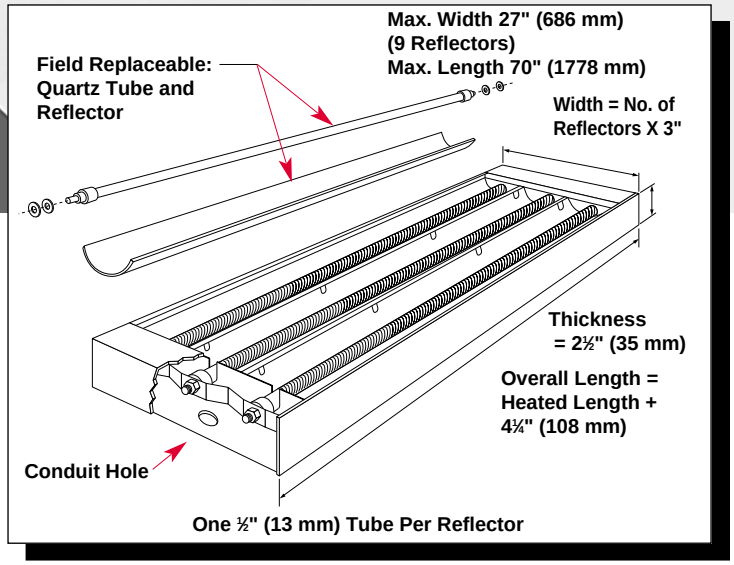

How to Order

The RAYMAX 1626 is **made-to-order** only. It is helpful to have the following information available:

- Heated width (3-inch increments) and length
- Total wattage
- Voltage and phase (balanced 3-phase on three, six and nine tube units only)
- Mounting studs, if desired

Availability

Made-to-Order: Consult Watlow

F.O.B.: St. Louis, Missouri

Radiant Band and Strip Emitters

Constructed using Watlow's exclusive mineral insulation, rugged stainless steel sheath and high emissivity coating, these heaters can operate at temperatures to 1300°F (700°C), and 30 W/in^2 (4.7 W/cm^2).

Sizes

Strip Emitters

Width: 3 in (76.2 mm)

Length: 6 in (152.4 mm) min.
31 in (787.4 mm) max.

Band Emitters

Width: 1 in (25.4 mm),
2 in (50.8 mm),
3 in (76.2 mm) max.

- Segment Length: 6 in (152.4 mm) min. to 42 in (1066.8 mm) max.
- Partial arcs to full 360° coverage: Consult Watlow.
- High emissivity coating on inside standard. For high emissivity coating on outside: Consult Watlow.
- Post terminals standard; high temperature Type H leads available.

Options

- Mounting studs
- Mounting clips for 3 inch wide emitter strips, part #MM6063
- Thermocouple welded to sheath
- Thermocouple pocket welded to sheath
- Bayonet fitting for VAT style thermocouple

Applications

- Heating rotating drums and rollers
- Tube ovens
- Small spot heating
- Heat shrinking and curing wire coatings
- Heat laminating wheels

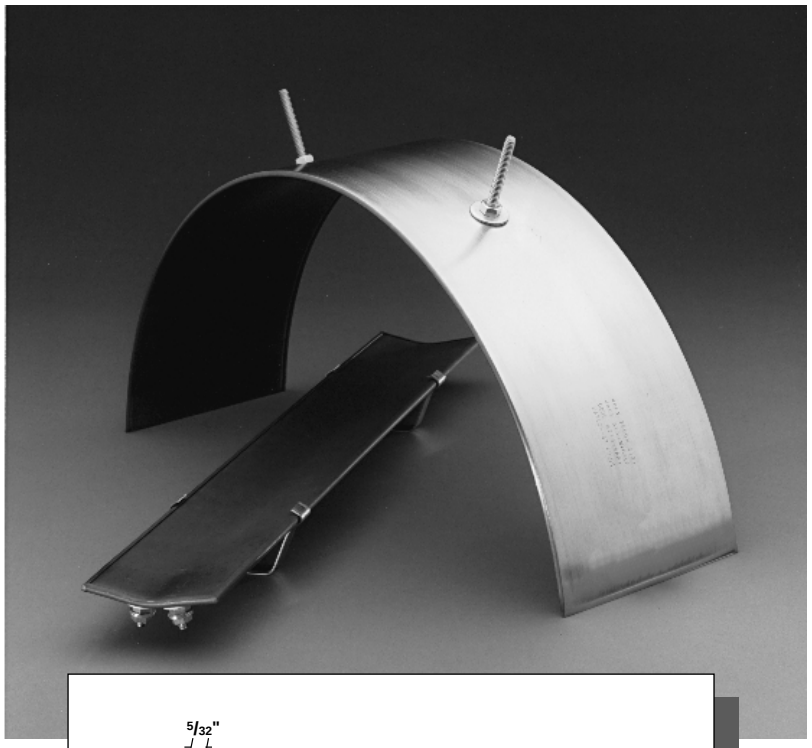

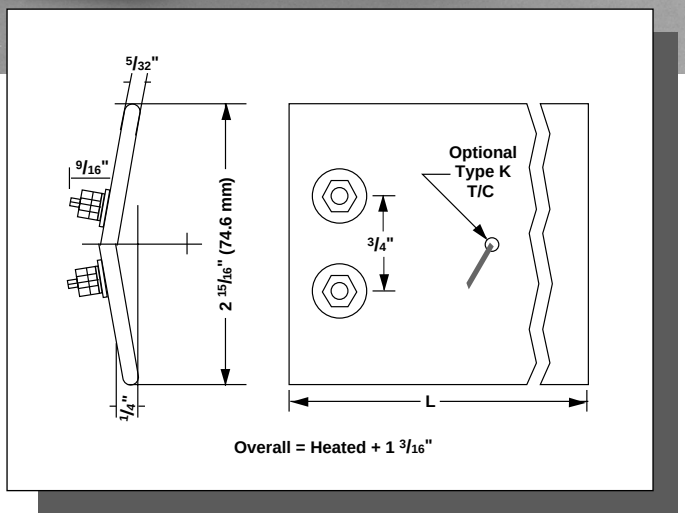

How to Order

The radiant band/strip emitters are available **made-to-order** only. It is helpful to have the following information available:

- Heated width and length (or diameter for band emitters)
- Total wattage
- Voltage, single phase only
- Mounting studs, if desired
- Thermocouple or thermowell or thermocouple pocket, if desired

Availability

Made-to-Order: Consult Watlow

Radiant Heaters

Quartz

The Watlow quartz tube radiant heater provides medium wave infrared energy and fast heat up and cool down. With element temperatures around 1700°F (930°C) the heater produces infrared radiation with a peak energy wavelength of 2.5 microns. Lower operating temperatures produce longer wave lengths. The majority of the energy is transmitted through the translucent quartz tube without being absorbed.

Most designs reach full output in 30 to 60 seconds and typically cool down to 50 percent output in under 15 seconds. The quartz tube heater is ideal for applications where frequent line stoppages are anticipated or quick heat up or cool down is necessary. Heaters can be turned off between production runs to save energy. Unique control schemes are possible that adjust the wattage output of the heaters during the heating cycle.

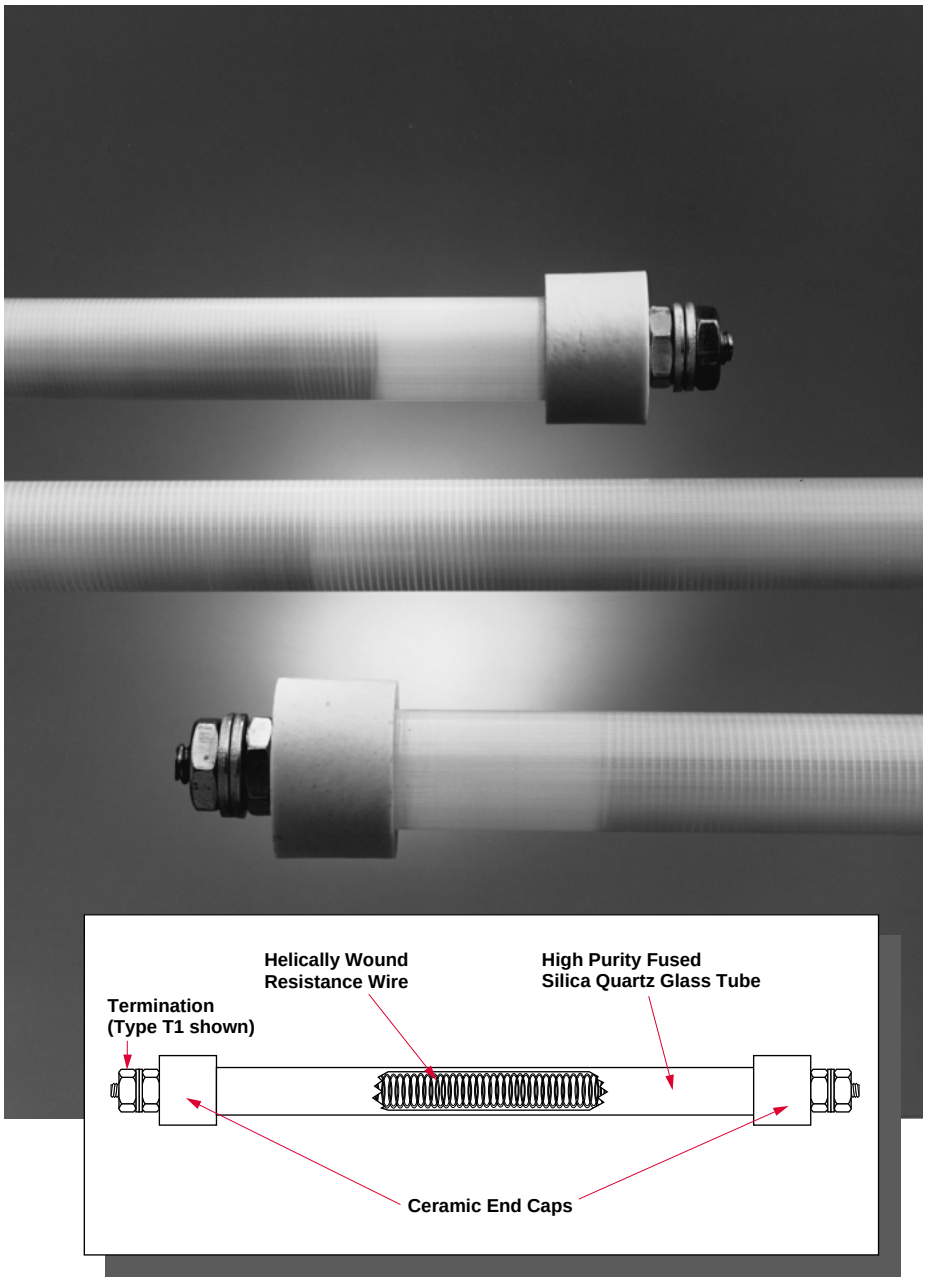

Performance Capabilities

- Element temperatures up to 1700°F (930°C)
- Tube watt densities up to 60 W/in of heated length (23.6 W/cm of heated length)

Features and Benefits

- **Fast delivery** on all standard replacement elements means less downtime waiting for parts.
- **Termination styles** are available for virtually every enclosure on the market.
- **Ceramic end caps**, bonded to the quartz tubing ends, provide a rigid support for terminations. RTV bonding also available.
- **Heaters usually do not need to be retracted** during line stoppages.
- **No objectionable glare** is created due to low emission in the visible spectrum.
- **No process contamination** occurs with this clean thermal energy source.

Applications

- Shrink packaging
- Laminating
- Thermoforming
- Fusing processes
- Vulcanizing and curing rubber
- Sterilizing
- Sealing
- Electrostatic copy equipment
- Drying processes: photos, textiles, coatings and sand core castings

Radiant Heaters

Quartz

Applications and Technical Data

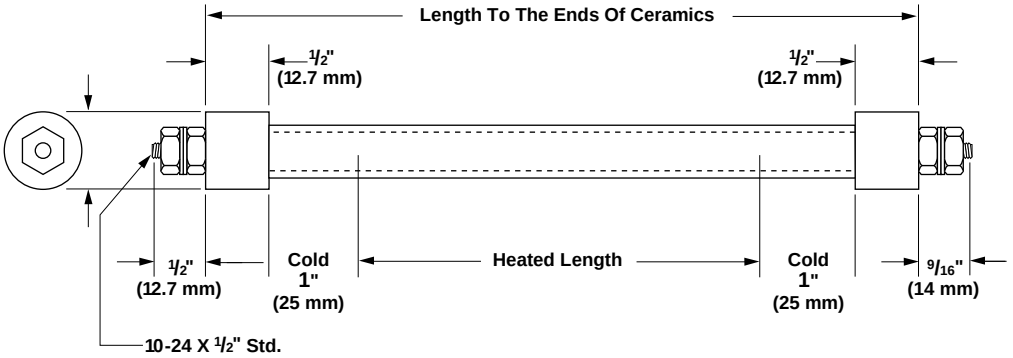

Specifications

Outside diameter (nominal/actual):

⅜ inch/0.394 inch (10 mm)

½ inch/0.512 inch (13 mm)

⅝ inch/0.630 inch (16 mm)

Ceramic end caps:

⅜ inch tube: 11⁄16 inch dia. X ½ inch long (16 X 13 mm)

½ inch tube: ¾ inch dia. X ½ inch long (19 X 13 mm)

⅝ inch tube: 15⁄16 inch dia. X ½ inch long (22 X 13 mm)

Available lengths: 8 inches to 72 inches (200 mm to 1829 mm) ⅜ inch diameter, 60 inch maximum length

Length tolerances:

Sheath: ±⅛ inch (3.2 mm)
Heated length: ±¼ inch (6.3 mm)

No-Heat length: 1 inch (25 mm) standard

Screw terminal: 10-24 thread

Termination: Type T1, T2, T3, T4, T5, T6

Electrical

Resistance tolerance:

NEMA standard +10 percent, -5 percent

Wattage tolerance:

NEMA standard +5 percent, -10 percent

Maximum volts: Consult factory

Maximum amperage: 20A

Maximum watt density:

Consult factory

Standard Terminations

Type T1

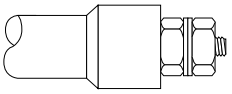

Standard termination: 10-24 stainless steel screw thread terminals.

Type T2

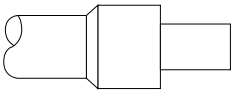

Quick disconnect fuse style: 7⁄16 inch dia. X ½ inch long (9.5 mm X 12.7 mm) terminals.

Type T3

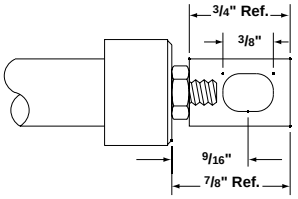

Tabs with slotted holes: SS Tabs ½ inch wide X ¾ inch long (12.7 mm X 19 mm). Slots 9⁄32 inch X ⅜ inch (7.1 mm X 9.5 mm).

Type T4

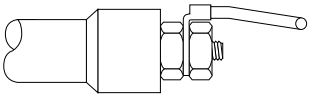

Flexible lead termination: 12-inch flexible leads; if longer leads are required, please specify.

Type T5

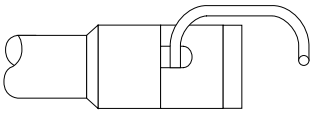

Flexible lead termination: 10-24 SS screw thread terminals insulated with ceramic terminal covers. Terminals are pre-wired with 12-inch flexible lead wire. If longer leads are required, please specify.

Type T6

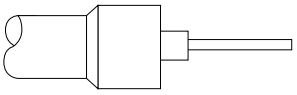

12-inch flexible leads exit the ceramic cap. There are no post terminals. Please specify if longer leads are required.

Mounting Frames for Watlow Quartz Heaters

See Raymax 1626 on **page 223**.

Special Heaters

Advanced Technology Capabilities

When design parameters exceed the performance capabilities of ordinary heaters, or require special configurations or sizes, or need to withstand hostile environments, Watlow's Special Heaters Department is uniquely qualified to service even the most demanding needs.

High wattage requirements: Watlow engineers have designed heaters that require distributed wattage with ratios of five to one in a single unit.

Size requirements: From the 52 foot (15.9 m) long FIREROD® cartridge heater we built for a nuclear test facility, to the 0.055 inch (1.40 mm) diameter heater used in earth core sampling, we won't limit ourselves when it comes to heater size.

Hostile environments: Extreme temperatures, corrosive materials, or contaminating toxins; we can build heaters to withstand almost any environment.

Sensing requirements: We can design heaters that require several built-in sensors. Multiple thermocouple, RTDs or thermistors can be installed inside the heater or in the sheath.

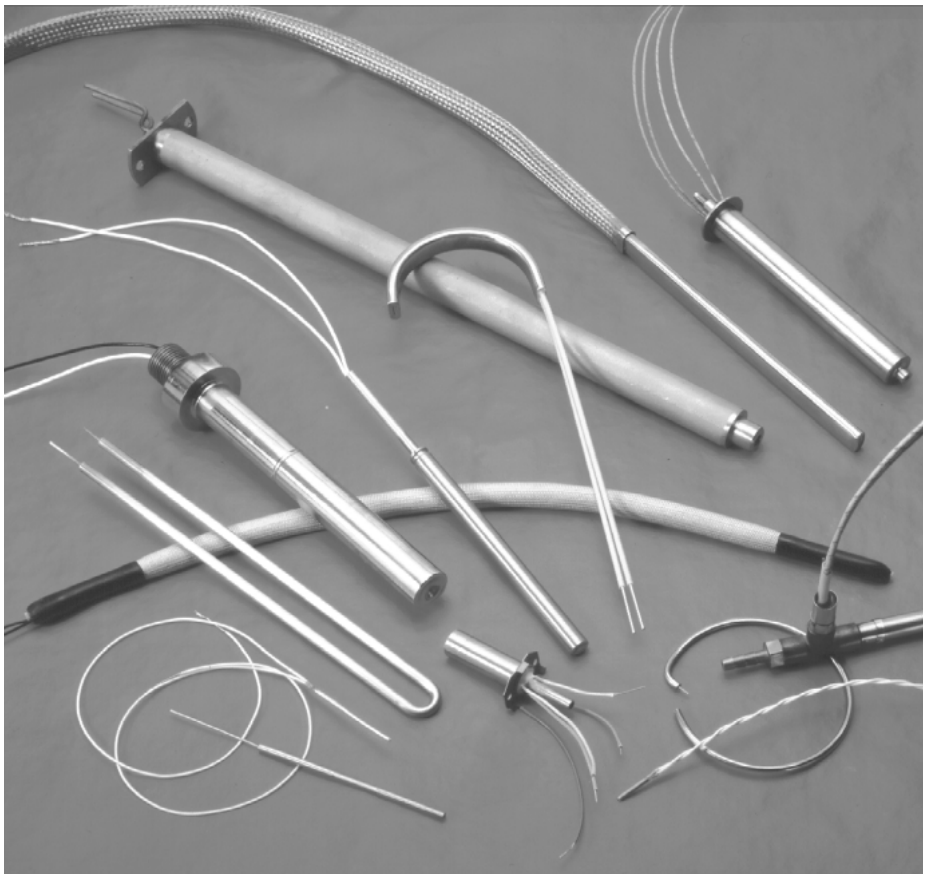

Performance Capabilities

- Operating temperatures to 2000°F (1371°C)
- Watt densities to 2000 W/in^2 (310 W/cm^2) when operating in water

Features and Benefits

- **Complete documentation packages** include drawings, material lists, test and process procedures, traceability records, and other documents required for compliance with your specifications.
- **Special sheath materials,** such as zircaloy, titanium or tantalum, are available for demanding applications.
- **Sizes as small as 0.055** inch (1.40 mm) to 1 ¾ inch (44.5 mm) in diameter or as long as 0.50 inch (12.7 mm) to 52 feet (15.9 mm).
- **Special formulated insulating materials,** as well as aluminum oxide and boron nitride, maximize heater performance.
- **In-house, non-destructive testing capabilities** include liquid penetrant, radiographs, and hydro and helium leak testing to assure customer specifications are met.
- **Built-in multiple thermocouples,** RTDs and thermistors measure internal and external temperatures.
- **Special configurations** are designed to fit your equipment precisely, whether the unit is coiled, flat, straight or angled.

Applications

- Aerospace
- Nuclear power, both land- and sea-based
- Medical research, including DNA, cancer and heart
- Environmental instrumentation
- Defense industry
- Circuit boards
- Refrigeration systems
- Packaging equipment
- Freeze protection
- Semiconductor processing equipment

Advanced Technology Capabilities

Applications

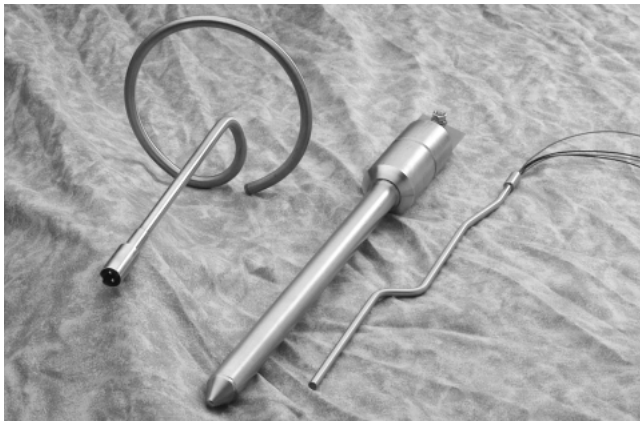

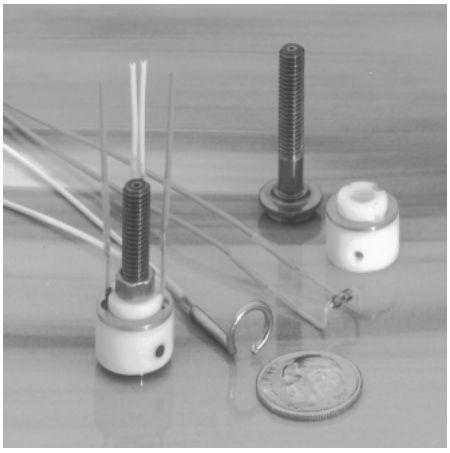

Photo shows the finished assembly and components for the DNA application: heater, thermistor, plus the customer-supplied tantalum heater support and housing.

DNA Heater Designed for Precise Temperature Control

A medical equipment manufacturer was developing a test unit for DNA samples. Specifications included a 30 volt, 40 watt heater with temperature sensing capability, designed to fit within an area 0.375 inch (9.5 mm) diameter by two inches (50.8 mm) in length.

Watlow's Special Heaters Department designed and built the heater assembly, which consisted of a 0.055 inch (1.40 mm) diameter by 1 11/32 inch (34.1 mm) long tubular element formed into a circle. Watlow engineers utilized a resistance wire 0.002 inch (0.05 mm) in diameter and wound it into a 0.020 inch (0.5 mm) diameter coil. The assembly also included a thermistor to closely sense temperature change.

25-Year Old Heaters Finally Replaced

A nuclear reactor required unusually long cartridge heaters to heat the reactor's coolant, keeping the solution warm during off cycle. The heater had to maintain a vessel temperature of 700°F (371°C). The required measurements were ¾ inch (19 mm) in diameter by 30 feet 8 9/16 inches (9.4 mm) in length, +¼ inch (+6.4 mm). The heated section was 18 feet (5.5 m) long, while the cold section was 12 feet (3.7 m).

Watlow's Special Heaters Department designed and manufactured the heaters to the customer's unusual requirement in 1965. After operating for twenty-five years, Watlow replaced those heaters following the same specifications, but making some internal improvements. The new heaters are expected to outlast the reactor.

How to Order

Special heaters are available as **made-to-order** units only. To order, please specify:

- Temperature requirement
- Watt density
- Material requirements
- Dimensional requirements
- Operating voltage
- Environmental conditions
- Lead configuration
- Application requirements

Quick Ship • *Same day shipment on all stock units.*

Strip Heaters

MI Strip

The Watlow MI strip is a thin, responsive heater that sets unmatched standards for performance and durability.
It makes use of the most advanced heater construction techniques, including embedding a nickel chromium element wire in Watlow's exclusive mineral insulation. Only 0.042 inches (1.067 mm) thick, this layer of insulation brings the element wire closer to the heater sheath. The result is heat flows easily from the element wire to the sheath, thus allowing the wire to run cooler than conventional heaters.

Performance Capabilities

- Sheath temperatures to 1400°F (760°C)
- Watt densities to 100 W/in^2 (15.5 W/cm^2)
- Maximum voltage 480V~(ac)

Features and Benefits

- **Higher watt densities** than any other strip heater contribute to faster heat-up.
- **Exclusive mineral insulation** combines high dielectric strength and superior thermal conductivity which transfers heat rapidly to the sheath.
- **304 stainless steel sheath** is welded together at strategic points to maintain the high compaction of mineral insulation and produce a rigid heater.
- **UL® component recognition** is available in 250V~(ac) or less.

Applications

- Solder pots
- Zinc die-casting equipment
- Dies and mold heating
- High temperature resins
- Tank and platen heating
- Ovens
- Packaging equipment

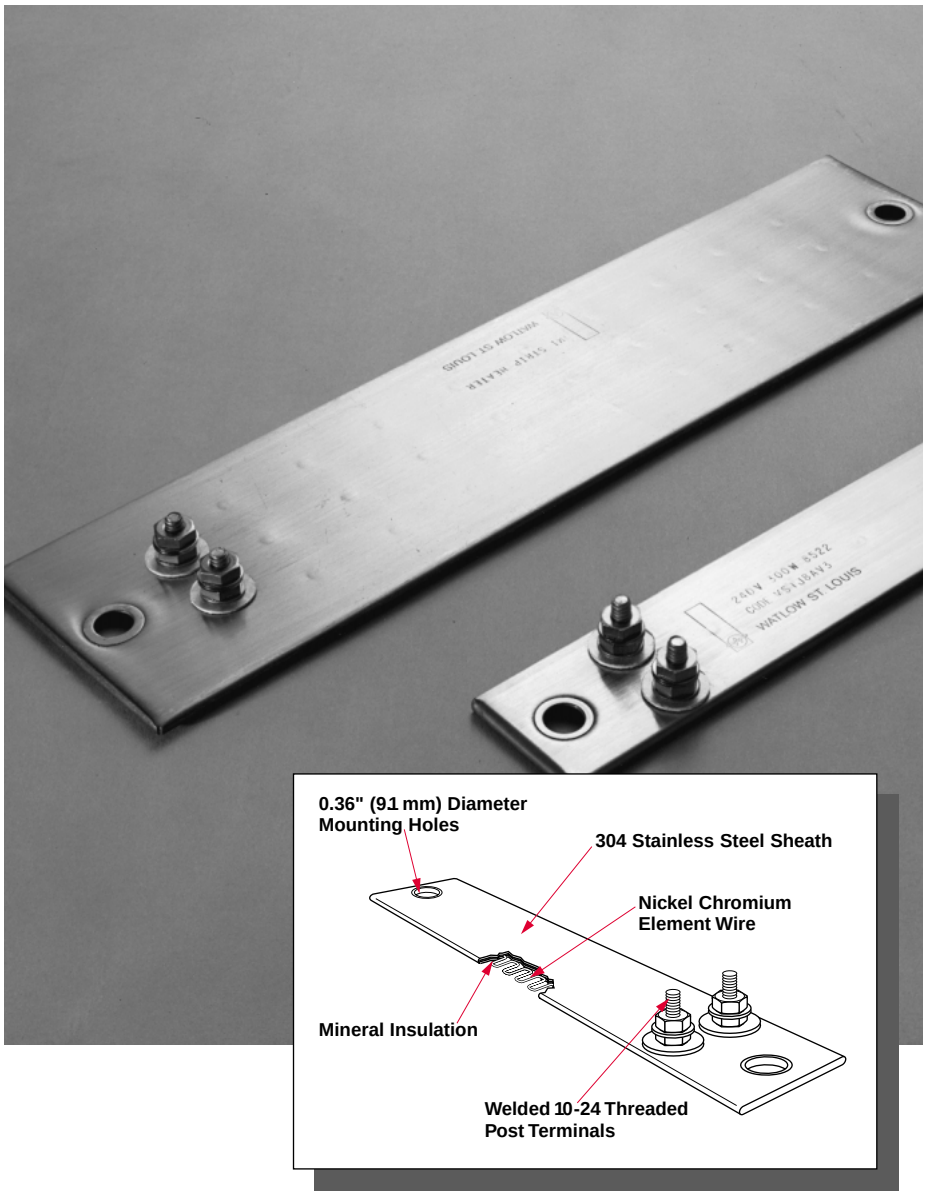

How to Order

Please specify:

- Watlow code number
- Overall dimensions: length and width
- Wattage: see maximum allowable watt density graph
- Termination type (parallel or one-on-one)
- Mounting holes, if desired
- Quantity

If stock units do not meet specific application needs, Watlow can manufacture MI strip heaters to meet special requirements.

Availability

Stock: Same day shipment

Made-to-Order: Consult a Watlow sales engineer or authorized distributor.

MI Strip

Applications and Technical Data

Calculating Watt Density

Watt density is the amount of wattage per square inch of heated area. To determine watt density, divide the total wattage by the heated area.

$$\textbf{Watt Density} = \frac{\textbf{Total Watts}}{\textbf{Heated Area}}$$

To apply this equation we must define the term "heated area." Heated area is the total contact surface of the heater less areas of no heat that are found around terminals, mounting holes, etc.

Heated Area =
Total Contact Area - No-Heat Area

To calculate the heated area:

1. Locate the **no-heat factor** from the chart on the right that corresponds to the type of heater being considered.
2. To use the formula below, insert the no heat factors, length and width (in inches).

   Heated Area =
   (Length - No-Heat Factor)
   x Width

Type	Factor (inch)
1 in wide post term 1 on 1	1.56
1 in wide post term 1 on 1 with mounting holes	3.56
1 in wide post term 2 on 1	1.93
1 in wide post term 2 on 1 with mounting holes	3.93
For all other widths:	
2 on 1 post terminal	1.18
2 on 1 with mounting holes	3.18

Calculating Watt Density

The sketches on the next page and the graph on this page will help select the correct watt density for a particular application. First, refer to the sketches to determine the heated area of the heater. Then, use the watt density formula and graph to make sure that the maximum watt density of the heater will not be exceeded in the specific application.

$$\textbf{Watt Density} = \frac{\textbf{Wattage}}{\textbf{Heated Area}}$$

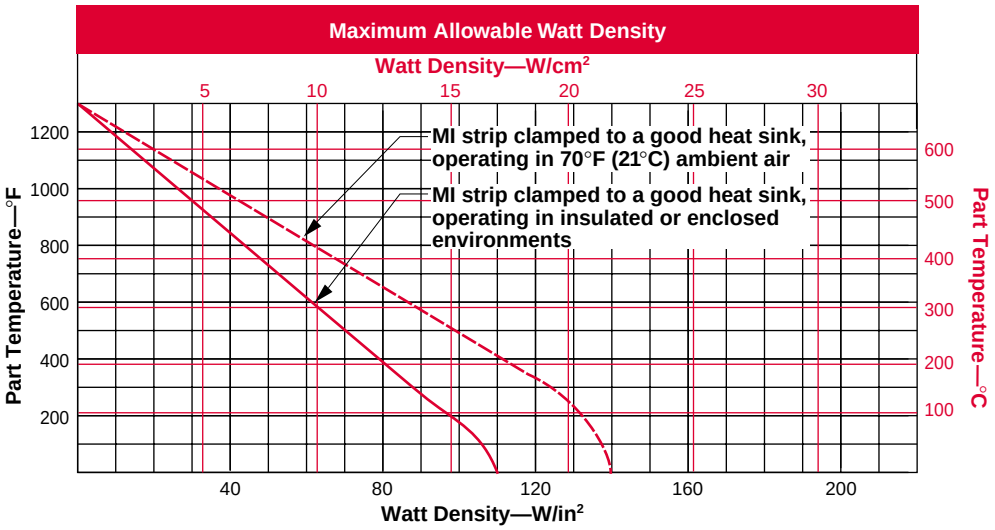

Strip Heaters

MI Strip

Applications and Technical Data

Specifications

Width: 1, 1.5 and 2 inches (25.4, 38.1, 50.8 mm)

Tolerance: ±1/32

Length: 8 to 30 inches (205 to 760 mm)

Tolerance: ±1/8

Terminations:

1 inch (25.4 mm) wide—post terminals one-on-one

1.5 to 2 inches (38.1 to 50.8 mm)—post terminals two-on-one

1" (25.4 mm) Wide

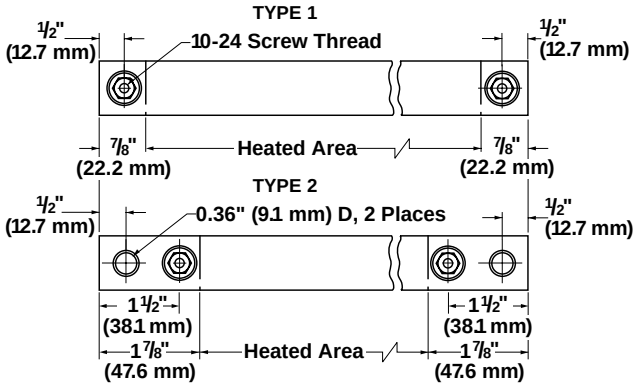

1½"–2" (38.1–50.8 mm) Wide

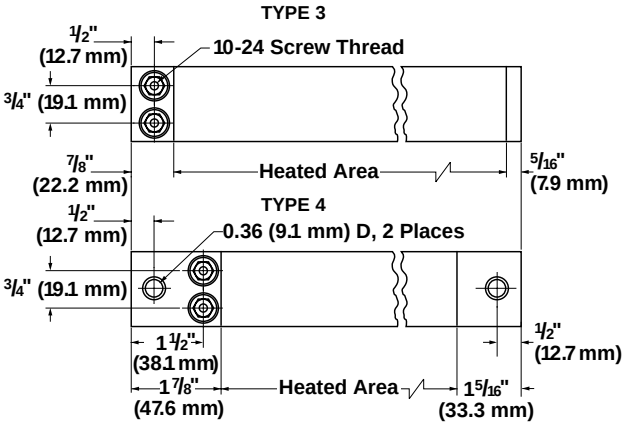

All Widths

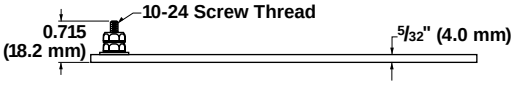

Stock List (Parallel Terminals) Type 3 and 4 — **F.O.B.: St. Louis, Missouri**

Width in. (mm)	Length in. (mm)	Volts	Power (Watts)	Watt Density W/in² (W/cm²)	Approximate Net. Wt. lbs. (kg)	Type	Code No.
1 ½ (38.1)	8 (203.2)	120	500	48 (7.4)	0.3 (0.15)	3	**MS1J8AS1**
1 ½ (38.1)	8 (203.2)	240	500	50 (7.8)	0.3 (0.15)	3	**MS1J8AS3**
1 ½ (38.1)	12 (304.8)	120	350	26 (4.0)	0.5 (0.2)	4	**MS1J12AV2** ①
1 ½ (38.1)	12 (304.8)	240	350	26 (4.0)	0.5 (0.2)	4	**MS1J12AV3** ①
1 ½ (38.1)	12 (304.8)	120	800	49 (7.6)	0.5 (0.2)	3	**MS1J12AS1**
1 ½ (38.1)	12 (304.8)	240	800	49 (7.6)	0.5 (0.2)	3	**MS1J12AS2**
1 ½ (38.1)	18 (457.2)	120	1000	40 (6.2)	0.8 (0.3)	3	**MS1J18AS1**
1 ½ (38.1)	18 (457.2)	240	1000	40 (6.2)	0.8 (0.3)	3	**MS1J18AS2**

① Denotes units with mounting holes. Mounting holes are 0.36 inches (9.14 mm) in diameter, and are intended for use with ¼ inch (6.35 mm) bolts. Centers of mounting holes are located ½ inch (12.7 mm) from the ends of the heater.
Note: Type 1 & 2 are made-to-order only.

Quick Ship • *Same day shipment on all stock units*

Strip Heaters

Mica Strip

The Watlow mica strip heater is an economical and reliable source of heat for industrial equipment. A mere 15 mils (0.4 mm) thick mica insulator on both sides of the resistance element provides complete electrical insulation and offers little resistance to efficient heat flow. Plus mica withstands high voltage spikes, resists moisture and is inert to most chemicals.

Performance Capabilities

- Sheath temperatures to 900°F (480°C) on zinc-coated units
- Sheath temperatures of 1200°F (650°C) on stainless steel units
- Watt densities to 55 W/in^2 (8.5 W/cm^2)
- Maximum voltage 480V~(ac)

Features and Benefits

- **Low mass construction** heats up faster to provide quick response to control input.
- **Flat resistance ribbon** generates heat over a broad area. This design solution puts the heat source closer to the work.
- **Rust-resistant, zinc-coated steel sheath** is treated to improve emissivity. The strength of this material also gives the heater rigidity.
- **Optional stainless steel sheath** is available for more corrosive atmospheres.
- **Nickel-plated steel terminal posts** are securely riveted to ensure a positive, trouble-free connection to the resistance circuit.
- **Computer aided design engineering** assures the best combination of ribbon gauge, total wattage and winding spacing. This design combination maximizes heat transfer and life of the heater.

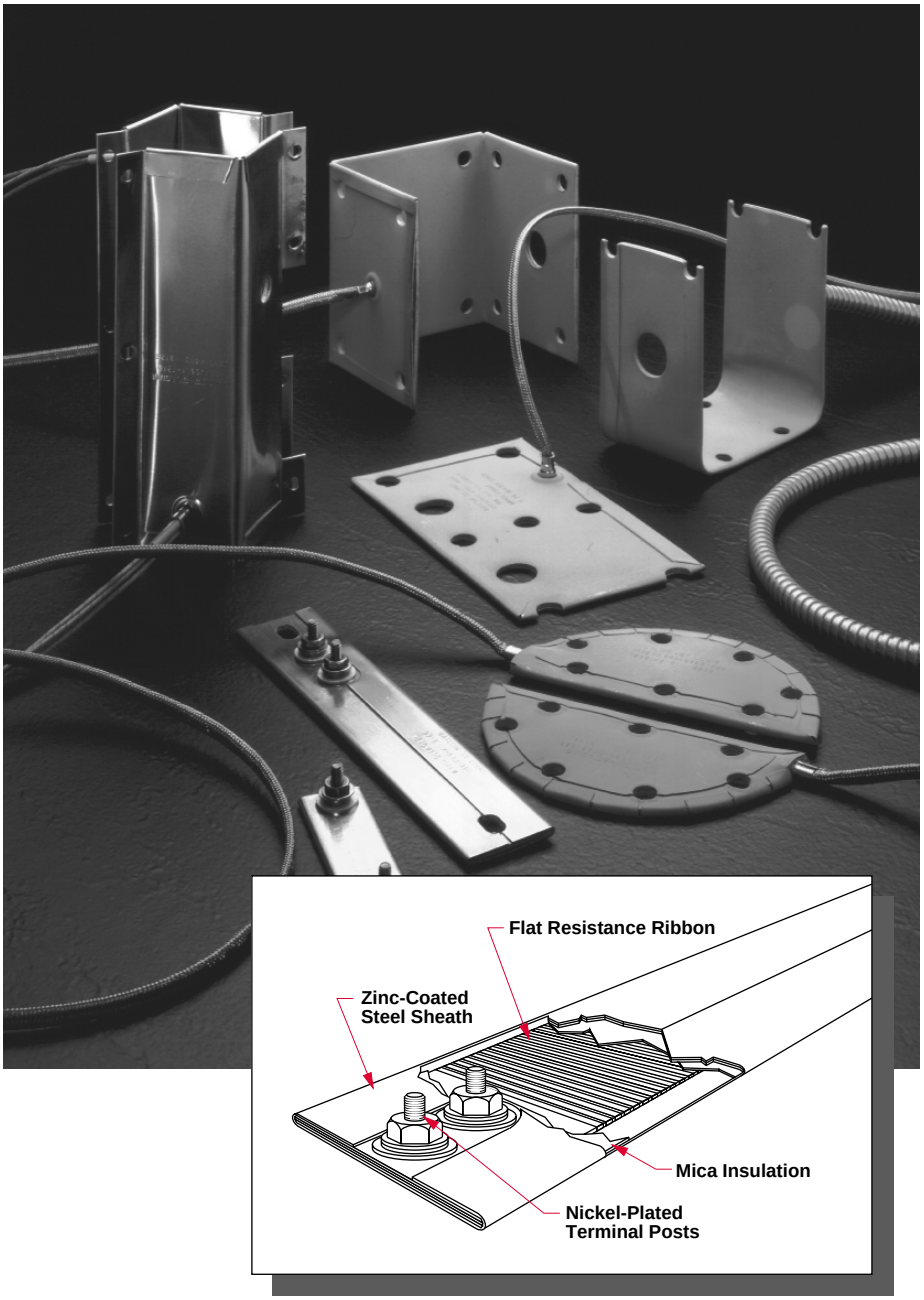

- **Excellent dielectric strength** is guaranteed because all incoming mica receives a quality control inspection.
- **UL® component recognition** is available for applications to 900°F (480°C) sheath temperature.

  File number E52951

Applications

- Vulcanizing presses
- Sealing equipment
- Hot plates
- Hot stamping
- Dies and molds
- Thermoforming
- Tin melting
- Packaging equipment
- Food warming equipment

UL® is a registered trademark of Underwriter's Laboratories, Inc.

Strip Heaters

Mica Strip

Applications and Technical Data

Type 1—Opposite Ends

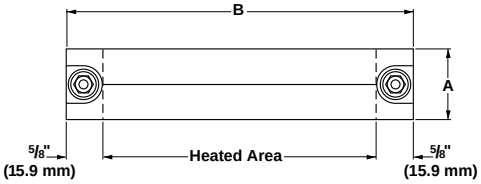

Type 2—Tandem

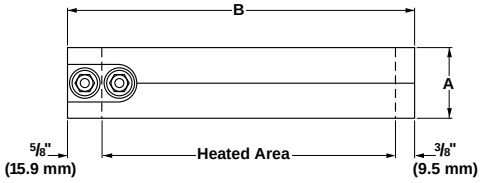

Type 3—Parallel Made-to-Order

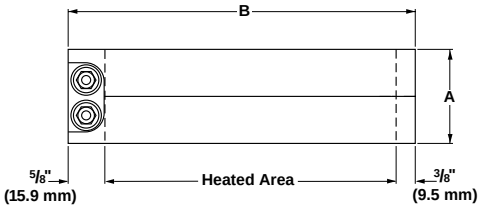

Type 4—Opposite Ends with Holes

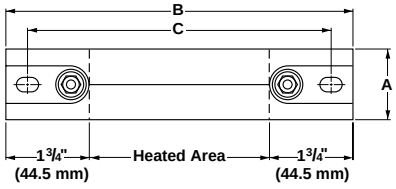

Type 5—Tandem with Holes

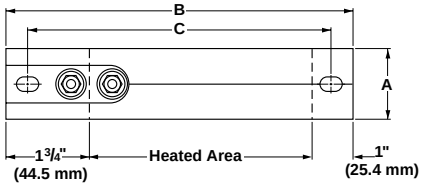

Type 6—Parallel with Holes

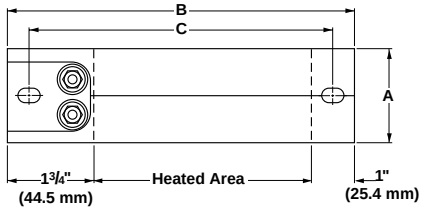

Specify **Type** when ordering.

Physical Limitations of Lead Variations

Heater Type	Width				Length			
	Minimum		Maximum		Minimum		Maximum	
	in	(mm)	in	(mm)	in	(mm)	in	(mm)
Post Terminal								
Type 1 - Opposite ends	⅝	(15.8)	15	(381)	2	(50.8)	96①	(2438.4)
Type 2 - Tandem	⅝	(15.8)	15	(381)	2	(50.8)	96①	(2438.4)
Type 3 - Parallel	1½	(38.1)	15	(381)	2	(50.8)	96①	(2438.4)
Type 4 - Opposite ends with holes	⅝	(15.8)	15	(381)	5½	(139.7)	96①	(2438.4)
Type 5 - Tandem with holes	⅝	(15.8)	15	(381)	5½	(139.7)	96①	(2438.4)
Type 6 - Parallel with holes	1½	(38.1)	15	(381)	5½	(139.7)	96①	(2438.4)
Leads								
Type C, E. F, H	1	(25.4)	15	(381)	5½	(139.7)	96①	(2438.4)
Type K								
without mounting holes	1	(25.4)	15	(381)	5½	(139.7)	96①	(2438.4)
with mounting holes	1½	(38.1)	15	(381)	5½	(139.7)	96①	(2438.4)
European Plug								
Vertical	1	(25.4)	15	(381)	5½	(139.7)	96①	(2438.4)
Horizontal	2½	(63.5)	15	(381)	6¼	(159)	96①	(2438.4)
Three Phase	3	(76.2)	15	(381)	5½	(139.7)	96①	(2438.4)
Dual Voltage	3	(76.2)	15	(381)	5½	(139.7)	96①	(2438.4)
Terminal Box②								
Type 2 - Tandem	1½	(38.1)	15	(381)	4¼	(108)	96①	(2438.4)
Type 3 - Parallel	2½	(63.5)	15	(381)	4¼	(108)	96①	(2438.4)
Type 5 - Tandem with holes	1½	(38.1)	15	(381)	6¼	(159)	96①	(2438.4)
Type 6 - Parallel with holes	2½	(63.5)	15	(381)	6¼	(159)	96①	(2438.4)

① Consult the factory if you need to exceed 96 inches (2438.4 mm).
② Not available on stock heaters.

Note: Some combinations of maximum and minimums cannot occur on the same heater.

Terminations

Types 1 through 6, as illustrated, show the placement of terminals for Watlow mica strip heaters. However, please note Type 3 terminals are not available on stock units. Placement is specified in terms of length, width and center-to-center dimensions. These dimensions are as follows:

Length:
Tolerance: ±1/16 inch (1.6 mm)

Width:
Tolerance: ±1/16 inch (1.6 mm)

Thickness:
Nominal: 3/16 inch (4.7 mm)

Types 4, 5 and 6 have ⅜ inch x ¼ inch (9.5 mm x 6.3 mm) mounting slots. Letters A, B and C, called out in the illustrations, denote the following: A = width, B = overall length and C = center-to-center dimensions on mounting slots.

Strip Heaters

Mica Strip

Applications and Technical Data

Continued

Calculating Watt Density

Watt density is the amount of wattage per square inch of heated area. To determine watt density, divide the total wattage by the heated area.

$$\textbf{Watt Density} = \frac{\textbf{Total Watts}}{\textbf{Heated Area}}$$

To apply this equation we must define the term "heated area." Heated area is the total contact surface of the heater less areas of no heat that are found around terminals, mounting holes, etc.

Heated Area =
Total Contact Area - No-Heat Area

To calculate the heated area:

Heated Area =
(Length - No-Heat) x Width

Maximum Allowable Watt Density

The following derating factors are applicable to the **Maximum Allowable Watt Density** graph. Please review these factors and the graph to determine the maximum watt density for the application.

Derating Factors:

- For heaters mounted less than one inch (25 mm) apart on a metal part, derate by 5 percent.
- For heaters mounted within three inches (76 mm) of a reflective surface, derate by 10 percent.
- For heaters mounted two to six inches (51 to 150 mm) apart and radiating toward each other, derate by 10 percent.
- For heaters mounted within one inch (25 mm) of a reflective surface, derate by 20 percent.
- For heaters mounted less than two inches (51 mm) apart and radiating toward each other, derate by 20 percent.
- For termination Types 2 and 5, as well as lead Types C, E and H (see illustrations on **pages 234 and 236**) that are less than two inches (51 mm) wide, derate as follows: zinc-coated units by 10 percent and stainless steel units by 20 percent.

Application Hints

To maximize the performance of a mica strip heater, ensure:

- Small heaters with 5 in² (32.3 cm²) or less of heated area are 120V~(ac). These heaters can be wired in series for a 240V~(ac) power supply.
- The surface to be heated is clean and smooth, so that heat is transferred efficiently. Even small air gaps can cause hot spotting.
- Terminal post nuts are not overly tightened. Although the posts are securely riveted to the elements, excessive torque could break the connection.

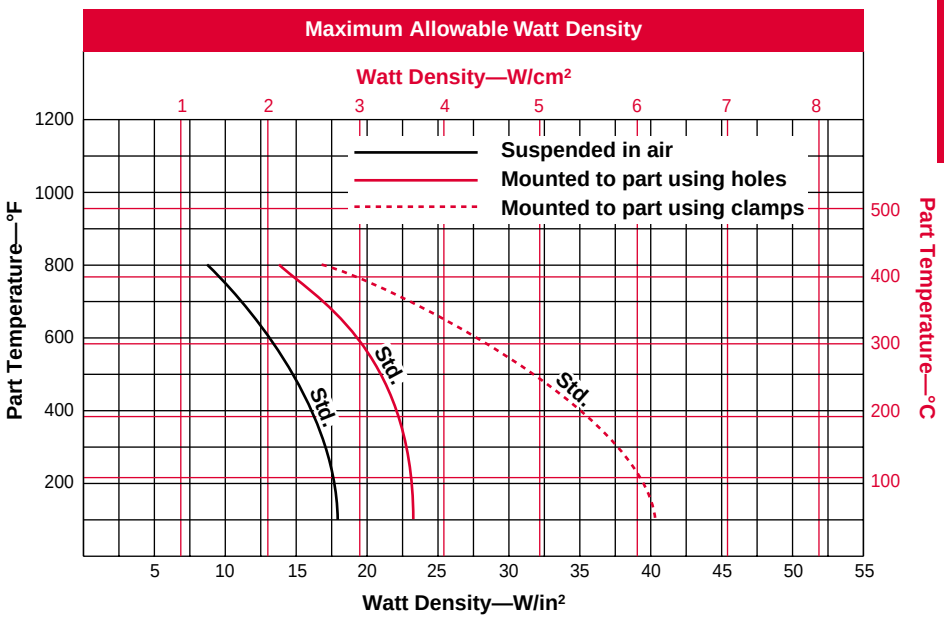

Strip Heaters

Mica Strip

Termination Options

Post Terminals (Standard)

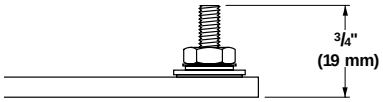

Post terminals have a threaded length of 7/16 inch (11 mm) and require approximately ¾ inch (19 mm) clearance. Specify **standard terminals** when ordering.

Long Terminals

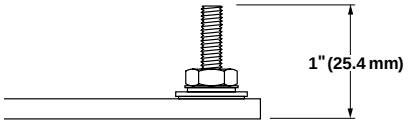

Longer terminals with 11/16 inch (17.5 mm) threaded lengths are available and require approximately one inch (25 mm) clearance. Specify **long terminals** when ordering.

Button Terminals

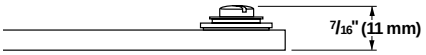

The slotted screw head terminals require only 7/16 inch (11 mm) clearance. Specify **button terminals** when ordering.

Three Terminal Construction

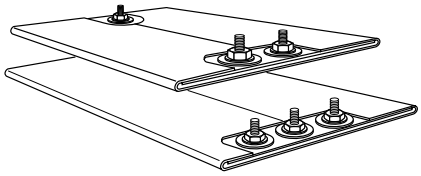

A third terminal can be added to provide dual voltage or three-heat operation. Or, it can be connected to the sheath for easy grounding. Specify **dual voltage** or **three-heat operation** when ordering.

Type E—Loose Metal Braided Leads

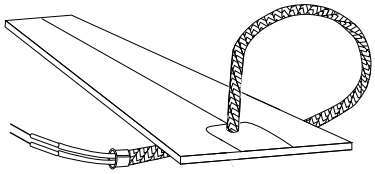

Loose metal braid encloses two fiberglass leads for good abrasion protection, lead flexibility, and wiring convenience. Leads are two inches (51 mm) longer than the braid. To order, specify **Type E** and **length**. Leads are two inches longer than braid.

Type C—Metal Overbraid Leads

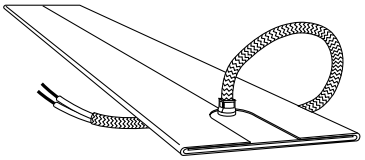

Each fiberglass-insulated lead wire exits in a single metal braid from the back of the heater. This arrangement offers abrasion protection, lead flexibility and convenient wiring for a neat installation. Minimum heater length is 5½ inches (140 mm). Specify **Type C** and **length** when ordering. Leads are two inches longer than braid.

Type H—Flexible Steel Hose Leads (Vertical)

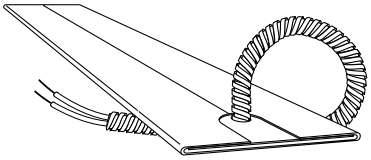

Galvanized, flexible steel hose gives superior mechanical protection where lead abrasion is a particular problem. Minimum heater length is 5½ inches (140 mm). Specify **Type H** and **lead length** when ordering, leads are typically two inches longer than hose.

Type K—Flexible Leads

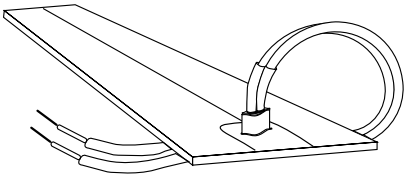

Two on One (Vertical)

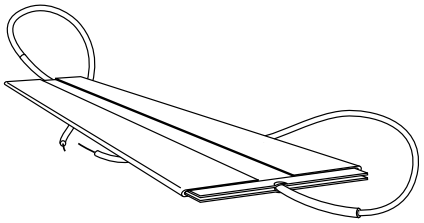

One on One (Horizontal)

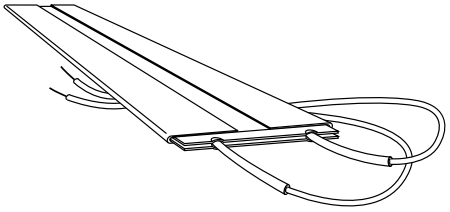

Two on One (Horizontal)

Type K has two fiberglass-insulated leads. These leads can exit one at each end or both at the same end, so please specify end termination when ordering. Type K is suitable for applications where lead abrasion is not a problem. Specify **Type K orientation** and **length** when ordering.

Strip Heaters

Mica Strip

Options

External Finishing

Sheath Material

Please specify a stainless steel sheath when the part temperature reaches in excess of 700°F (370°C).

Holes or Slots

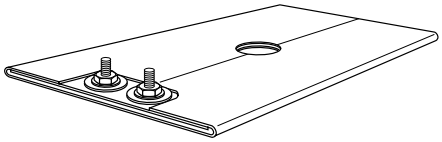

When required for instrumentation or mounting, holes or slots may be provided as a manufactured variation in nearly any location as long as there is at least one inch (25 mm) between the edge of the hole and one side of the heater. Dimensional drawing is required when ordering.

Widths

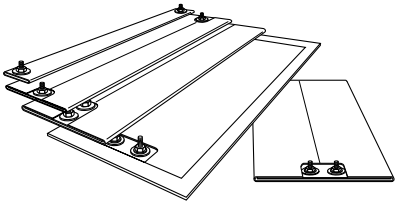

The 1½ inch (38 mm) wide heater is the most efficient size due to its maximum clamping effect. Heaters are available in widths from ⅝ inch (16 mm) to 24 inches (610 mm).

Heaters five inches (125 mm) wide and greater are constructed with end folds and a reinforcement shim rather than full folds. Units less than 1⅜ inches (35 mm) wide have the sheath seam on the side opposite the terminals.

Open Element

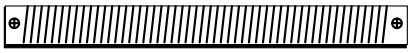

This economical heater design without the metal case is commonly used in laminating machines. The heater assembly is sandwiched between machine parts, eliminating the need for additional and expensive metal cases.

Distributed Wattage

A mica strip heater can be designed with varying heat profile along the length for uneven heat distribution.

Butt Case

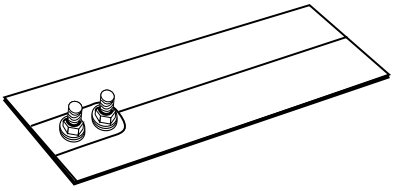

Recommended for heating applications where strip heater will be placed in a milled slot between two steel plates. Specify **butt case** construction when ordering.

Four Sides Closed

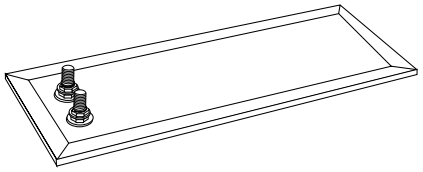

Mica strip heaters can be closed on all four sides to prevent contamination from getting inside the heater. Standard on strip heaters five inches wide and greater.

Strip Heaters

Mica Strip

Options

External Finishing

Ring Heaters

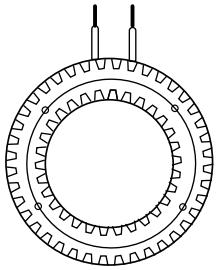

When ordering ring heaters, specify **inside** and **outside diameters**. If mounting holes are required, specify location and hole size.

Irregular Shapes

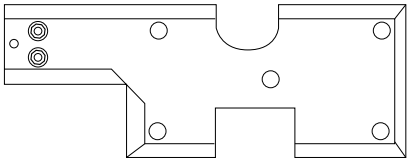

Mica strip heaters can be made into any practical shape and electrical rating. Examples include: cone, flat circular, square, rectangular, and hexagon.

Cross Section Formed

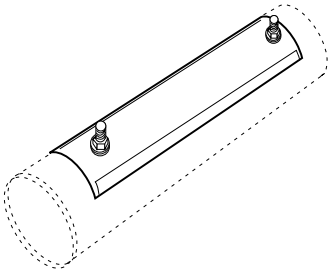

Strip heaters can be formed on a cross section for piping applications. Specify diameter of pipe on which heaters are to be mounted.

Square, Rectangular Bands

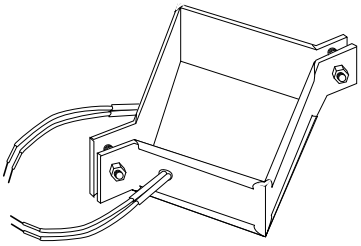

Square or Rectangular heaters are normally used for heating dies on plastic extruders, or the barrels of twin screw extruders. These can be made in either one or two piece construction (see illustrations).

Clamping Styles

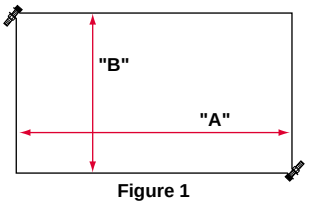

Figure 1

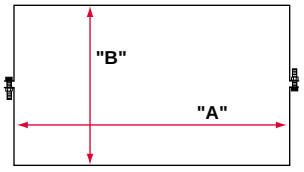

Figure 2

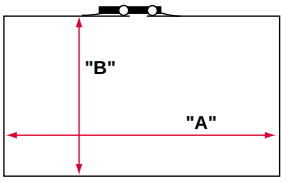

Figure 3

Refering to the illustrations, the preferred design is Figure 1 with bent-up flange clamping due to the uniform applied clamping force at the corners. Next is Figure 2, with bent-up flanges or built-in strapping brackets at the sides. The least preferred design is Figure 3, one-piece heater, due to the lack of uniform applied clamping force.

Cone Shapes

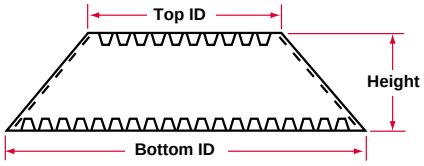

Cone shaped heaters are normally used for special heating applications when heat is required for hoppers or funnels. They are made strictly to customer specifications. The preferred method of attachment is with bent-up flange clamping.

Hex Bands

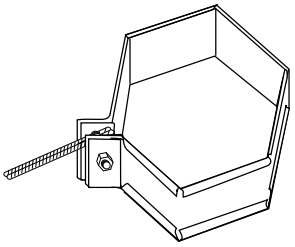

Hex shaped heaters are used on the hex shaped portion of the nozzle on injection molding machines. A drawing is required when ordering.

Strip Heaters

Mica Strip

Options

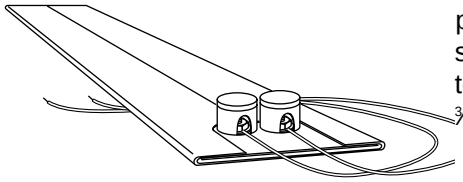

Ceramic Terminal Covers

Ceramic terminal covers are a convenient, economical way to provide safety. Covers are sized for standard 7⁄16 inch (11 mm) long post terminals, that require approximately ¾ inch (19 mm) clearance.

The clearance, with ceramic cover cap, is 0.91 inch (23.1 mm). Excluding the thickness of the heater, the clearance is 0.75 inch (19 mm). Screw thread size is 10-24. To order, specify Watlow code number **Z-4918** and quantity.

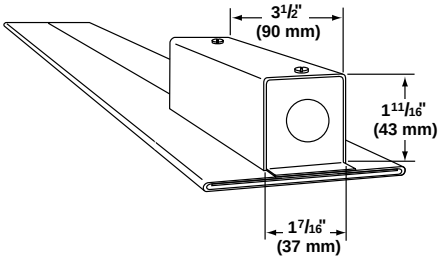

Metallic Terminal Box

A high quality metallic terminal box is welded to the heater sheath. Units with tandem terminals must be at least 1½ inches (38 mm) wide. Units with parallel terminals must be at least 4¼ inches (108 mm) wide. Minimum length is 4¼ inches (108 mm) without mounting holes or 6¼ inches (159 mm) with holes. When ordering specify **terminal box.**

Accessories

Clamping Variations

Clamping Bars

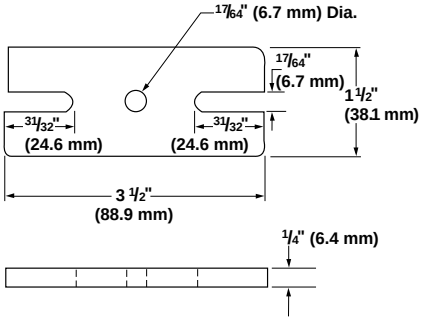

For maximum life and efficient operation, strip heaters must be firmly clamped to the part being heated. Clamping bars 3½ inch (90 mm) wide can be used to clamp strips with a maximum width of 3 inches (76 mm). Watlow recommends clamping every 6 inches (150 mm). Specify code number **MB101-1** and quantity when ordering clamping bars.

Strip Heaters

F.O.B.: St. Louis, Missouri

Mica Strip

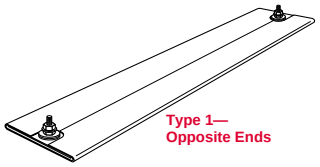

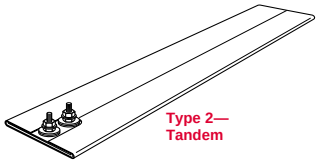

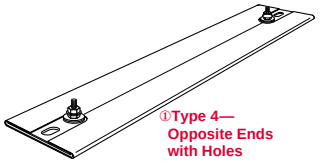

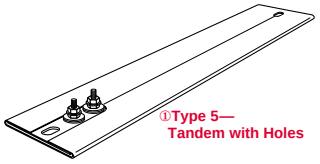

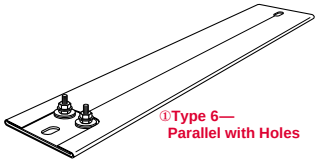

Width in (mm)	Overall Length in (mm)	Type	Ctr-to-Ctr Mtg Holes in (mm)	Volts	Power (Watts)	Watt Density W/in² (W/cm²)	Approx. Net Weight lbs (kg)	Avail.	Code No.
1 (25.4)	3½ (88.9)	1	— —	120	50	22 (3.4)	0.09 (0.04)	Stk	**S1A3JP1**
	6 (152.4)	1	— —	120	100	21 (3.3)	0.17 (0.08)	Stk	**S1A6AP1**
	6 (152.4)	1	— —	240	100	21 (3.3)	0.17 (0.08)	Stk	**S1A6AP2**
	12 (304.8)	4	11 (279.4)	120	175	21 (3.3)	0.33 (0.15)	Stk	**S1A12AT1**
	12 (304.8)	4	11 (279.4)	240	175	21 (3.3)	0.33 (0.15)	Stk	**S1A12AT2**
	6 (152.4)	5	5¼ (133.4)	120	100	20 (3.1)	0.17 (0.08)	Stk	**S1A6AU1②**
1½ (38.1)	18 (457.2)	1	— —	120	750	30 (4.6)	0.75 (0.34)	Stk	**S1J18AP1**
	6 (152.4)	2	— —	120	250	33 (5.1)	0.25 (0.11)	Stk	**S1J6AR1**
	8 (203.2)	2	— —	120	400	37 (5.7)	0.33 (0.15)	Stk	**S1J8AR1**
	8 (203.2)	2	— —	240	400	37 (5.7)	0.33 (0.15)	Stk	**S1J8AR2**
	12 (304.8)	2	— —	120	500	30 (4.6)	0.50 (0.23)	Stk	**S1J12AR1**
	12 (304.8)	2	— —	240	500	30 (4.6)	0.50 (0.23)	Stk	**S1J12AR2**
	14 (355.6)	2	— —	120	500	25 (3.9)	0.58 (0.26)	Stk	**S1J14AR1**
	14 (355.6)	2	— —	240	500	25 (3.9)	0.58 (0.26)	Stk	**S1J14AR2**
	18 (457.2)	2	— —	120	800	31 (4.8)	0.75 (0.34)	Stk	**S1J18AR1**
	18 (457.2)	2	— —	240	800	31 (4.8)	0.75 (0.34)	Stk	**S1J18AR2**
	24 (609.6)	2	— —	120	1000	29 (4.5)	1.0 (0.45)	Stk	**S1J24AR1**
	24 (609.6)	2	— —	240	1000	29 (4.5)	1.0 (0.45)	Stk	**S1J24AR2**
	8 (203.2)	4	7 (177.8)	120	150	22 (3.4)	0.33 (0.15)	Stk	**S1J8AT1**
	12 (304.8)	4	11 (279.4)	120	250	20 (3.1)	0.50 (0.23)	Stk	**S1J12AT1**
	12 (304.8)	4	11 (279.4)	240	250	20 (3.1)	0.50 (0.23)	Stk	**S1J12AT2**
	18 (457.2)	4	17 (431.8)	240	500	23 (3.6)	0.75 (0.34)	Stk	**S1J18AT1**
	5½ (139.7)	5	4½ (114.3)	120	125	30 (4.6)	0.23 (0.11)	Stk	**S1J5JU1**
	7½ (190.5)	5	6½ (165.1)	120	150	21 (3.3)	0.32 (0.15)	Stk	**S1J7JU1**
	8 (203.2)	5	7 (177.8)	120	150	19 (2.9)	0.33 (0.15)	Stk	**S1J8AU1**
	8 (203.2)	5	7 (177.8)	240	150	19 (2.9)	0.33 (0.15)	Stk	**S1J8AU2**
	8 (203.2)	5	7 (177.8)	120	175	22 (3.4)	0.33 (0.15)	Stk	**S1J8AU3**
	8 (203.2)	5	7 (177.8)	240	175	22 (3.4)	0.33 (0.15)	Stk	**S1J8AU4**
	8 (203.2)	5	7 (177.8)	120	250	32 (5.0)	0.33 (0.15)	Stk	**S1J8AU5**
	8 (203.2)	5	7 (177.8)	240	250	32 (5.0)	0.33 (0.15)	Stk	**S1J8AU6**
	10 ½ (266.7)	5	9 ½ (241.3)	120	250	22 (3.4)	0.42 (0.19)	Stk	**S1J10JU1**
	10 ½ (266.7)	5	9 ½ (241.3)	240	250	22 (3.4)	0.42 (0.19)	Stk	**S1J10JU2**
	12 (304.8)	5	11 (279.4)	120	250	18 (2.8)	0.50 (0.23)	Stk	**S1J12AU1**
	12 (304.8)	5	11 (279.4)	240	250	18 (2.8)	0.50 (0.23)	Stk	**S1J12AU2**
	12 (304.8)	5	— —	120	150	11 (1.7)	0.50 (0.23)	Stk	**S1J12AU10③**
	12 (304.8)	5	— —	240	150	11 (1.7)	0.50 (0.23)	Stk	**S1J12AU11③**
	15 ¼ (387.4)	5	14 ¼ (362.0)	240	500	27 (4.2)	0.63 (0.29)	Stk	**S1J15EU1**
	17 ⅞ (454.0)	5	16 ⅞ (428.6)	120	375	17 (2.6)	0.75 (0.34)	Stk	**S1J17RU1**
	17 ⅞ (454.0)	5	16 ⅞ (428.6)	120	500	22 (3.4)	0.75 (0.34)	Stk	**S1J17RU2**
	17 ⅞ (454.0)	5	16 ⅞ (428.6)	240	500	22 (3.4)	0.75 (0.34)	Stk	**S1J17RU3**
	21 (533.4)	5	20 (508.0)	240	650	24 (3.7)	0.87 (0.39)	Stk	**S1J21AU1**
	23 ¾ (603.3)	5	22 ¾ (577.9)	120	500	16 (2.5)	0.99 (0.45)	Stk	**S1J23NU1**
	23 ¾ (603.3)	5	22 ¾ (577.9)	240	500	16 (2.5)	0.99 (0.45)	Stk	**S1J23NU2**
	23 ¾ (603.3)	5	22 ¾ (577.9)	120	750	24 (3.7)	0.99 (0.45)	Stk	**S1J23NU3**
	23 ¾ (603.3)	5	22 ¾ (577.9)	240	750	24 (3.7)	0.99 (0.45)	Stk	**S1J23NU4**
	25 ½ (647.7)	5	24 ½ (622.3)	240	650	19 (2.9)	1.10 (0.50)	Stk	**S1J25JU1**
	30 ½ (774.7)	5	29 ½ (749.3)	240	800	19 (2.9)	1.30 (0.59)	Stk	**S1J30JU1**
2½ (63.5)	6 ½ (165.1)	6	5 ½ (139.7)	120	225	24 (3.7)	0.45 (0.20)	Stk	**S2J6JV1**
	6 ½ (165.1)	6	5 ½ (139.7)	240	225	24 (3.7)	0.45 (0.20)	Stk	**S2J6JV2**
	8 ½ (215.9)	6	7 ½ (190.5)	120	350	24 (3.7)	0.59 (0.27)	Stk	**S2J8JV1**
	8 ½ (215.9)	6	7 ½ (190.5)	240	350	24 (3.7)	0.59 (0.27)	Stk	**S2J8JV2**
	25 ½ (647.7)	6	24 ½ (622.3)	120	1000	18 (2.8)	1.78 (0.81)	Stk	**S2J25JV1**
	25 ½ (647.7)	6	24 ½ (622.3)	240	1000	18 (2.8)	1.78 (0.81)	Stk	**S2J25JV2**

① Mounting slots on stock heaters are ½ x 5⁄16 inch (12.7 x 7.9 mm). On made-to-order units, mounting slots are ⅜ x ¼ inch (9.5 x 6.3 mm).
② This unit has ⅜ x ¼ inch (9.5 x 6.3 mm) mounting holes.
③ Heaters with code numbers **S1J12AU10** and **S1J12AU11** have zinc-coated steel sheath. All other heaters have stainless steel sheath.

How to Order

To order stock mica strip heater, specify:

- Quantity
- Watlow code number

Availability

Stock: Same day shipment

Made-to-Order: If stock units do not meet application needs, Watlow can manufacture mica strip heaters to special requirements. Please consult a Watlow sales engineer or authorized distributor.

Quick Ship • *Next day shipment on all stock units.*

Strip Heaters

375 Strip

Aptly named for its 0.375 inch (9.5 mm) thickness, the Watlow 375 strip is a rugged heater capable of both high temperatures and high watt densities.

Its ruggedness comes from the design and use of choice materials. Watlow begins construction by accurately placing a coiled, nickel-chrome element wire in the center of the heater. The element wire is then embedded in MgO-based insulation ... compacted into a solid mass that results in excellent heat conductivity and high dielectric strength. Finally, the heater is enclosed in aluminized steel sheathing.

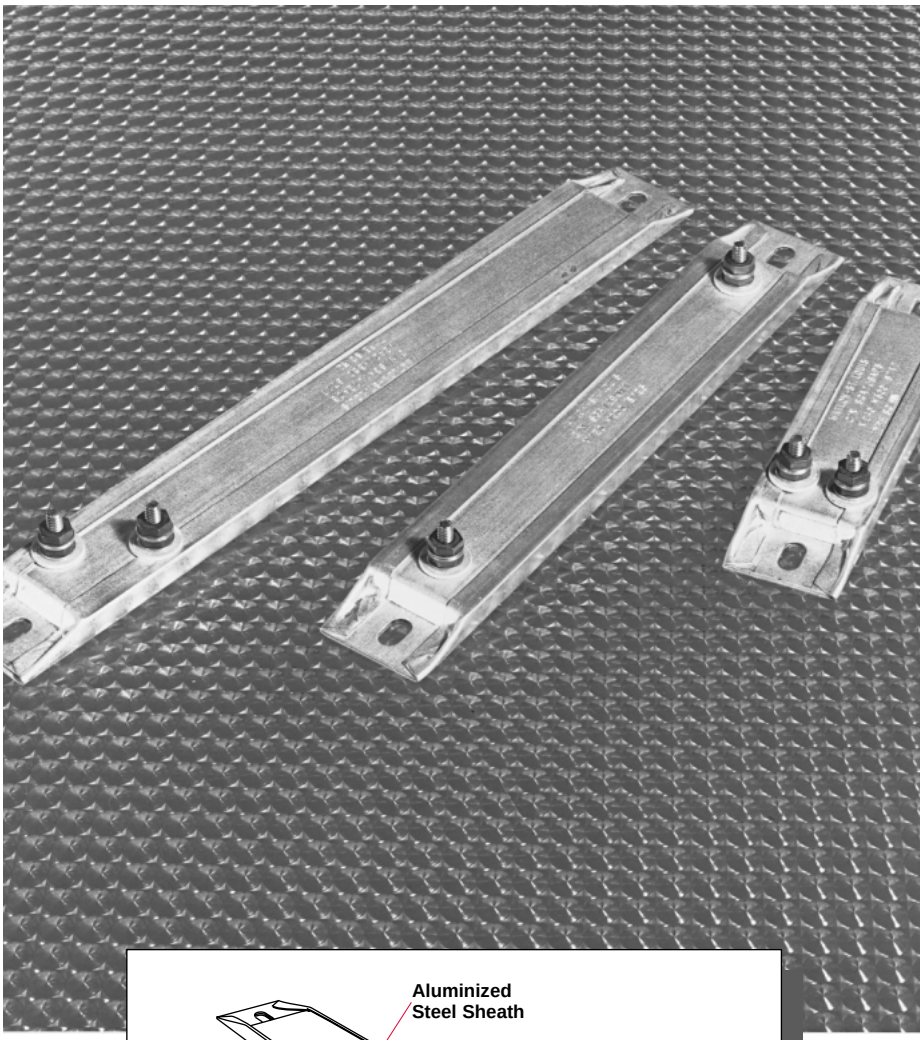

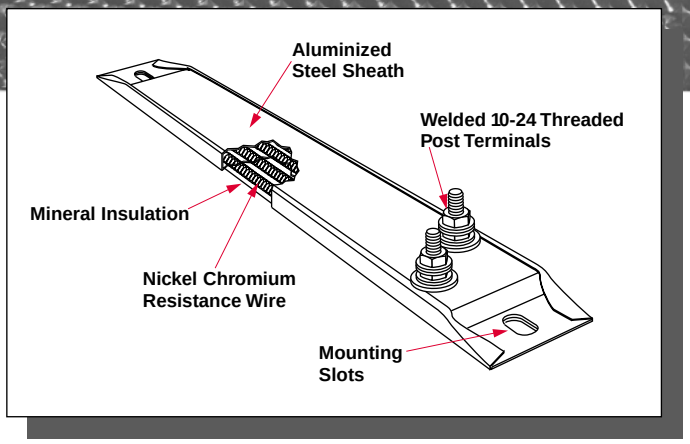

Performance Capabilities

- Aluminized steel sheath temperatures to 1100°F (595°C)
- Stainless steel sheath temperatures to 1200°F (650°C)
- Watt densities to 130 W/in^2 (20.2 W/cm^2)
- UL® approved to 240V~(ac) (File No. E52951)
- CSA approved to 600V~(ac) (File No. LR7392)

Features and Benefits

- **Nickel-chrome element wire** is centered in the heater to uniformly heat the strip.
- **Aluminized steel sheath** operates at higher temperatures and resists corrosion better than iron-sheathed heaters.
- **Optional 430 stainless steel sheath** is available for applications where temperatures reach 1200°F (650°C).
- **Post terminals, welded to the element wire**, produce strong, trouble-free connections.
- **Rigid ⅜ inch (9.5 mm) thick design** enables the 375 strip heater to fit into many existing applications.
- **Available dimensions** are 1½ inches (38 mm) wide, and 5½ (140 mm) to 48 inches (1220 mm) long.
- **Next day shipment is available on 106 in-stock models** in popular sizes and ratings.

Applications

- Food warming
- Freeze and moisture protection
- Tank and platen heating
- Packaging
- Dies and mold heating
- Autoclaves
- Ovens

UL® is a registered trademark of Underwriter's Laboratories, Inc.

375 Strip

Applications and Technical Data

Calculating Watt Density

Use the *Maximum Allowable Watt Density* graphs and formulas to ensure that the allowable watt density for the heater will not be exceeded in your application.
Watt density is calculated for one side of the heater only.

Formulas:

$$\text{Watt Density} = \frac{\text{Wattage}}{\text{Heated Area}}$$

Heated Area
(Offset Terminals) = [Overall Length (A) x 1.5 in] - 6 in^2
= [Overall Length (A) x 38.1 mm] - 38.7 cm^2

Heated Area
(Parallel Terminals) = [Overall Length (A) x 1.5 in] - 4.7 in^2
= [Overall Length (A) x 38.1 mm] - 30.3 cm^2

Heated Area
(One-on-One Terminals) = [Overall Length (A) x 1.5 in] - 6.4 in^2
= [Overall Length (A) x 38.1 mm] - 41.3 cm^2

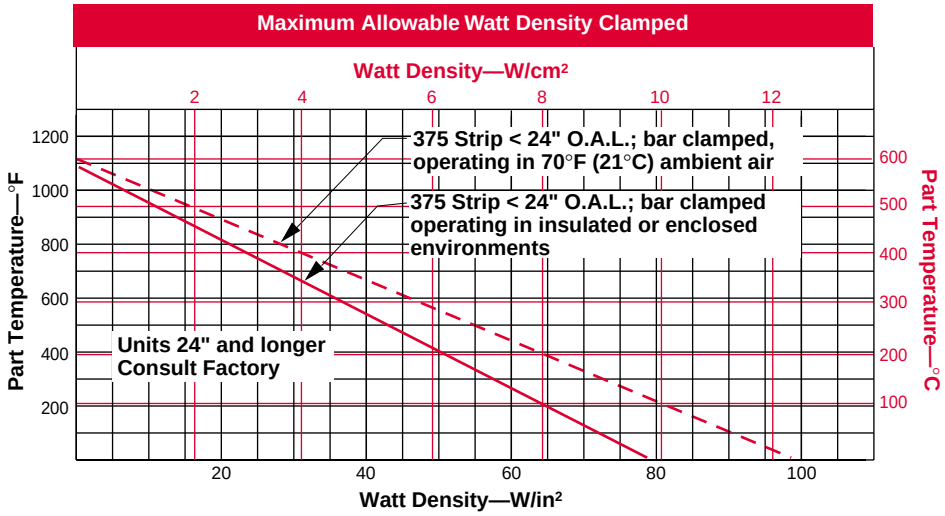

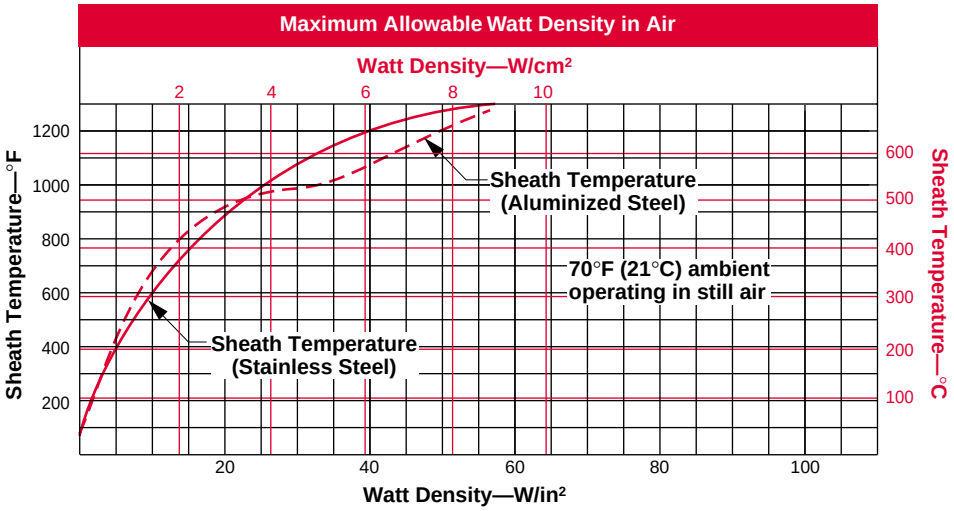

Strip Heaters

375 Strip

Termination Options

* Tab removal available from stock or manufactured.

Offset Terminals*

Two 10-24 threaded post terminals are offset from each other on the same end.

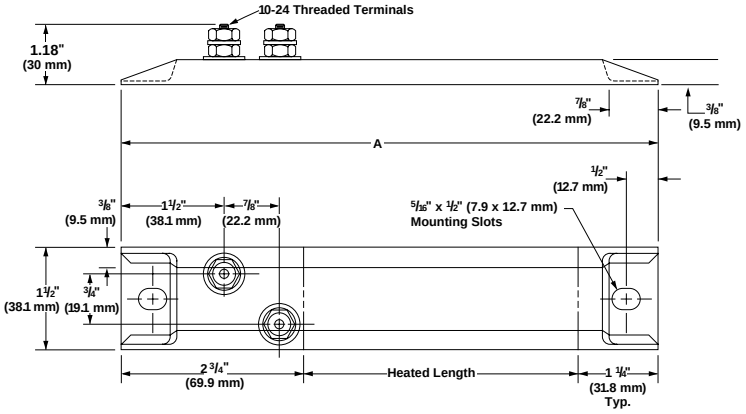

Parallel Terminals*

Two 10-24 threaded post terminals are used; both terminals on one end.

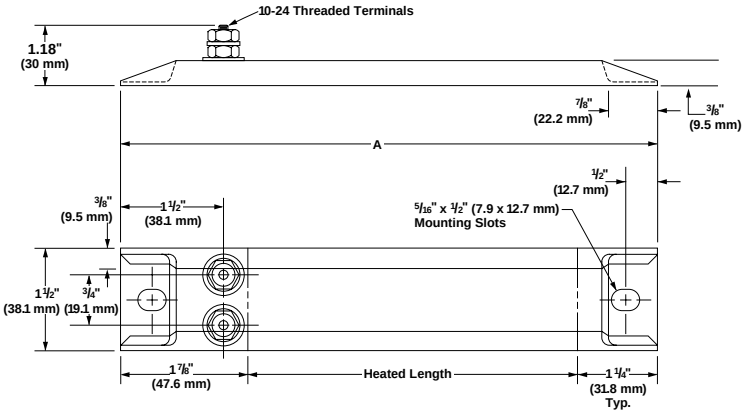

One-on-One Terminals*

Two 10-24 threaded post terminals are placed one on each end.

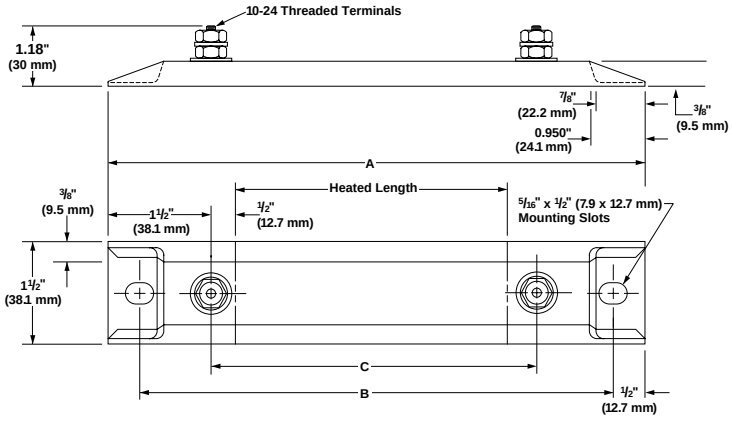

In-Line Terminals*

Two 10-24 threaded post terminals are in-line with each other on the same end.

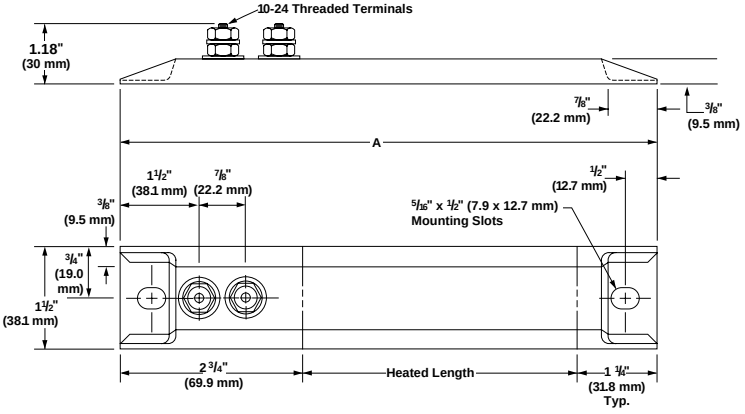

375 Strip

Termination Options

Continued

Variations

Metallic Terminal Boxes

Metallic terminal boxes are available on offset terminals from stock. Terminal boxes act as a safety feature by covering the terminals.

Conduit may be attached to the box through ⅞ inch (22 mm) diameter holes in the ends of the box. To order, specify terminal box.

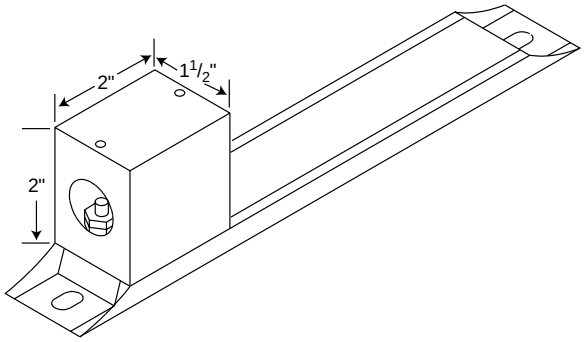

Available in in-line terminals only.

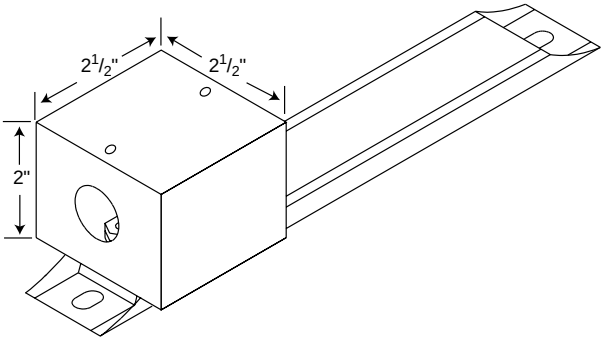

Available on offset terminals from stock and manufactured.

Accessories

Ceramic Terminal Covers

A convenient and economic way to insulate post terminals. Sized for standard length posts. 10-24 screw thread size. These are supplied as an accessory item and shipped separately. Specify **Z-4918** and quantity.

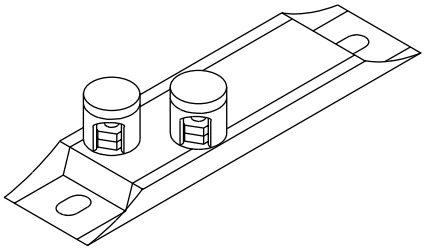

How to Order

To order your **stock** 375 strip heater, specify:

- Quantity
- Watlow code number
- Removal of mounting tabs, if desired

If stock units do not meet application needs, Watlow can manufacture 375 strip heaters to special requirements.

For **made-to-order** units, please specify, in addition to above information:

- Width
- Heater length, including mounting tabs
- Terminal type (offset, parallel or one-on-one)

Availability

Stock: Next day shipment

Made-to-Order: Please consult your Watlow sales engineer or authorized distributor.

Note: 5⁄16 inch (7.9 mm) x ½ inch (12.7 mm) mounting slots are supplied on all 375 strip heaters. Tabs can be removed upon request. Also, note Watlow code number specifies that the 375 strip heater comes with an aluminized steel sheath. If you require a special sheath material, such as stainless steel, please consult your sales engineer or authorized distributor for material availability.

① Chromalox® and Wellman® part numbers are used as a cross reference to help you select the equivalent Watlow code number. Chromalox® sizes 27 inches and longer, and all Wellman® sizes, will have mounting slot center to center distances ⅛ inch less than Watlow spacing.

Strip Heaters

F.O.B.: St. Louis, Missouri

375 Strip

Width in (mm)	Length in (mm)	Term.	Volts	Power (Watts)	Watt Density W/in² (W/cm²)	Approx. Net Wt. lbs (kg)	Avail.	Code No.	Chromolox® Code No.① Rust Resist. Iron Sheath	Chromolox® Code No.① Chrome Stl. Sheath	Wellman® Code No.① Aluminized Steel Sheath	Wellman® Code No.① Chrome Stl. Sheath
1½ (38.1)	5½ (139.7)	Parallel	120	125	35 (5.4)	0.4 (0.18)	Stk	**SGA1J5JP1**	PT-512	—	—	—
	5½ (139.7)	Parallel	120	250	70 (10.8)	0.4 (0.18)	Stk	**SGA1J5JP2**	—	PT-502	—	—
	6 (153.0)	Parallel	120	150	35 (5.4)	0.4 (0.18)	Stk	**SGA1J6AP2**	PT-615	—	—	—
	6 (153.0)	Parallel	240	150	35 (5.4)	0.4 (0.18)	Stk	**SGA1J6AP3**	PT-615	—	—	—
	6 (153.0)	Parallel	120	300	70 (10.8)	0.4 (0.18)	Stk	**SGA1J6AP4**	—	PT-603	—	—
	6 (153.0)	Parallel	240	300	70 (10.8)	0.4 (0.18)	Stk	**SGA1J6AP5**	—	PT-603	—	—
	7½ (190.5)	Offset	120	150	29 (4.5)	0.5 (0.23)	Stk	**SGA1J7J01**	OT-715	—	SS1041	—
	7½ (190.5)	Offset	240	150	29 (4.5)	0.5 (0.23)	Stk	**SGA1J7J02**	OT-715	—	SS1052	—
	7½ (190.5)	Offset	240	200	38 (5.9)	0.5 (0.23)	Stk	**SGA1J7J03**	—	OT-702	—	SS2052
	8 (203.2)	Offset	120	150	25 (3.9)	0.5 (0.23)	Stk	**SGA1J8A01**	OT-815	—	SS1061	—
	8 (203.2)	Offset	240	150	25 (3.9)	0.5 (0.23)	Stk	**SGA1J8A05**	OT-815	—	SS1072	—
	8 (203.2)	Offset	120	175	29 (4.5)	0.5 (0.23)	Stk	**SGA1J8A06**	OT-817	—	SS1081	—
	8 (203.2)	Offset	240	175	29 (4.5)	0.5 (0.23)	Stk	**SGA1J8A07**	OT-817	—	SS1092	—
	8 (203.2)	Offset	120	250	42 (6.5)	0.5 (0.23)	Stk	**SGA1J8A02**	—	OT-802	—	SS2061
	8 (203.2)	Offset	240	250	42 (6.5)	0.5 (0.23)	Stk	**SGA1J8A08**	—	OT-802	—	SS2072
	8 (203.2)	Offset	120	400	67 (10.4)	0.5 (0.23)	Stk	**SGA1J8A09**	—	OT-804	—	SS2081
	8 (203.2)	Offset	240	400	67 (10.4)	0.5 (0.23)	Stk	**SGA1J8A010**	—	OT-804	—	SS2092
	8 (203.2)	Offset	120	500	83 (12.9)	0.5 (0.23)	Stk	**SGA1J8A03**	—	—	—	—
	8 (203.2)	Offset	240	500	83 (12.9)	0.5 (0.23)	Stk	**SGA1J8A04**	—	—	—	—
	8 (203.2)	1-on-1	120	150	24 (3.7)	0.5 (0.23)	Stk	**SGA1J8AT1**	S-815	—	SD1021	—
	8 (203.2)	1-on-1	240	150	24 (3.7)	0.5 (0.23)	Stk	**SGA1J8AT2**	S-815	—	SD1032	—
	9½ (241.3)	1-on-1	120	200	23 (3.6)	0.6 (0.27)	Stk	**SGA1J9JT1**	S-920	—	SD1041	—
	10½ (266.7)	Offset	120	250	26 (4.0)	0.7 (0.32)	Stk	**SGA1J10J01**	OT-1025	—	SS1101	—
	10½ (266.7)	Offset	240	250	26 (4.0)	0.7 (0.32)	Stk	**SGA1J10J02**	OT-1025	—	SS1102	—
	10½ (266.7)	Offset	120	350	36 (5.6)	0.7 (0.32)	Stk	**SGA1J10J08**	—	OT-1003	—	SS2101
	10½ (266.7)	Offset	240	350	36 (5.6)	0.7 (0.32)	Stk	**SGA1J10J05**	—	OT-1003	—	SS2112
	10½ (266.7)	Offset	120	400	41 (6.4)	0.7 (0.32)	Stk	**SGA1J10J06**	—	OT-1004	—	SS2131
	10½ (266.7)	Offset	240	400	41 (6.4)	0.7 (0.32)	Stk	**SGA1J10J07**	—	OT-1004	—	SS2132
	12 (304.8)	Offset	120	250	21 (3.3)	0.8 (0.32)	Stk	**SGA1J12A01**	OT-1225	OT-1202	SS1141	—
	12 (304.8)	Offset	240	250	21 (3.3)	0.8 (0.32)	Stk	**SGA1J12A02**	OT-1225	OT-1202	SS1152	—
	12 (304.8)	Offset	120	350	29 (4.5)	0.8 (0.36)	Stk	**SGA1J12A05**	—	OT-1203	—	SS2141
	12 (304.8)	Offset	240	350	29 (4.5)	0.8 (0.36)	Stk	**SGA1J12A06**	—	OT-1203	—	SS2152
	12 (304.8)	Offset	120	500	42 (6.5)	0.8 (0.36)	Stk	**SGA1J12A03**	—	OT-1205	—	SS2161
	12 (304.8)	Offset	240	500	42 (6.5)	0.8 (0.36)	Stk	**SGA1J12A04**	—	OT-1205	—	SS2172
	12 (304.8)	1-on-1	120	250	20 (3.1)	0.8 (0.36)	Stk	**SGA1J12AT1**	S-1225	S-1202	SD1061	SD2071
	12 (304.8)	1-on-1	240	250	20 (3.1)	0.8 (0.36)	Stk	**SGA1J12AT2**	S-1225	S-1202	SD1072	SD2082
	12 (304.8)	1-on-1	240	500	40 (6.2)	0.8 (0.36)	Stk	**SGA1J12AT3**	—	S-1205	—	SD2122
	14 (355.6)	Offset	120	300	20 (3.1)	0.9 (0.41)	Stk	**SGA1J14A02**	OT-1430	—	SS1181	—
	14 (355.6)	Offset	240	300	20 (3.1)	0.9 (0.41)	Stk	**SGA1J14A01**	OT-1430	—	SS1192	—
	14 (355.6)	Offset	120	500	33 (5.1)	0.9 (0.41)	Stk	**SGA1J14A03**	—	OT-1405	—	SS2181
	14 (355.6)	Offset	240	500	33 (5.1)	0.9 (0.41)	Stk	**SGA1J14A04**	—	OT-1405	—	SS2192
	14 (355.6)	1-on-1	120	300	20 (3.1)	0.9 (0.41)	Stk	**SGA1J14AT1**	S-1430	—	SD1131	—
	15¼ (387.4)	Offset	120	325	19 (2.9)	1.0 (0.45)	Stk	**SGA1J15E02**	OT-1532	—	SS1201	—
	15¼ (387.4)	Offset	240	325	19 (2.9)	1.0 (0.45)	Stk	**SGA1J15E03**	OT-1532	—	SS1212	—
	15¼ (387.4)	Offset	240	500	30 (4.6)	1.0 (0.45)	Stk	**SGA1J15E04**	—	OT-1505	—	SS2212
	17⅞ (454.0)	Offset	120	350	17 (2.6)	1.2 (0.54)	Stk	**SGA1J17R04**	OT-1835	—	SS1221	SS2221
	17⅞ (454.0)	Offset	240	350	17 (2.6)	1.2 (0.54)	Stk	**SGA1J17R05**	OT-1835	—	SS1232	SS2232
	17⅞ (454.0)	Offset	120	375	18 (2.8)	1.2 (0.54)	Stk	**SGA1J17R06**	OT-1837	—	SS1241	—
	17⅞ (454.0)	Offset	240	375	18 (2.8)	1.2 (0.54)	Stk	**SGA1J17R07**	OT-1837	—	SS1252	—
	17⅞ (454.0)	Offset	120	500	24 (3.7)	1.2 (0.54)	Stk	**SGA1J17R01**	OT-1850	—	SS1261	SS2241
	17⅞ (454.0)	Offset	240	500	24 (3.7)	1.2 (0.54)	Stk	**SGA1J17R02**	OT-1850	—	SS1272	SS2252

CONTINUED

Wellman® is a registered tradename of Wellman Thermal Systems Corp.
Chromolox® is a registered tradename of Chromolox Industrial Heaters Products.

Strip Heaters

F.O.B.: St. Louis, Missouri

375 Strip

Width in (mm)	Length in (mm)	Term.	Volts	Power (Watts)	Watt Density W/in² (W/cm²)	Approx. Net Wt. lbs (kg)	Avail.	Code No.	Chromolox® Code No.① Rust Resist. Iron Sheath	Chromolox® Code No.① Chrome Stl. Sheath	Wellman® Code No.① Aluminized Steel Sheath	Wellman® Code No.① Chrome Stl. Sheath
1½ (38.1)	17⅞ (454.0)	Offset	120	750	36 (5.6)	1.2 (0.54)	Stk	**SGA1J17R09**	—	OT-1807	—	SS2261
	17⅞ (454.0)	Offset	240	750	36 (5.6)	1.2 (0.54)	Stk	**SGA1J17R08**	—	OT-1807	—	SS2272
	17⅞ (454.0)	Offset	120	1000	48 (7.4)	1.2 (0.54)	Stk	**SGA1J17R010**	—	OT-1801	—	SS2281
	17⅞ (454.0)	Offset	240	1000	48 (7.4)	1.2 (0.54)	Stk	**SGA1J17R03**	—	OT-1801	—	SS2292
	17⅞ (454.0)	1-on-1	120	500	24 (3.7)	1.2 (0.54)	Stk	**SGA1J17RT1**	S-1850	S-1805	SD1211	SD2171
	17⅞ (454.0)	1-on-1	240	500	24 (3.7)	1.2 (0.54)	Stk	**SGA1J17RT2**	S-1850	S-1805	SD1222	SD2182
	17⅞ (454.0)	1-on-1	240	750	35 (5.4)	1.2 (0.54)	Stk	**SGA1J17RT3**	—	S-1807	—	SD2202
	17⅞ (454.0)	1-on-1	120	1000	47 (7.3)	1.2 (0.54)	Stk	**SGA1J17RT4**	—	S-1801	—	SD2211
	17⅞ (454.0)	1-on-1	240	1000	47 (7.3)	1.2 (0.54)	Stk	**SGA1J17RT5**	—	S-1801	—	SD2222
	19½ (495.3)	Offset	240	350	15 (2.3)	1.3 (0.59)	Stk	**SGA1J19J06**	OT-1935	—	SS1301	—
	19½ (495.3)	Offset	120	500	22 (3.4)	1.3 (0.59)	Stk	**SGA1J19J07**	OT-1950	OT-1905	—	SS2301
	19½ (495.3)	Offset	240	500	22 (3.4)	1.3 (0.59)	Stk	**SGA1J19J04**	OT-1950	OT-1905	—	SS2312
	19½ (495.3)	Offset	240	750	32 (5.0)	1.3 (0.59)	Stk	**SGA1J19J08**	—	OT-1907	—	—
	19½ (495.3)	Offset	240	1000	43 (6.7)	1.3 (0.59)	Stk	**SGA1J19J01**	—	OT-1901	—	SS2332
	19½ (495.3)	1-on-1	240	750	32 (5.0)	1.3 (0.59)	Stk	**SGA1J19JT1**	—	S-1907	—	SD2262
	21 (533.4)	Offset	120	500	20 (3.1)	1.4 (0.64)	Stk	**SGA1J21A01**	OT-2150	—	SS1341	—
	21 (533.4)	Offset	240	500	20 (3.1)	1.4 (0.64)	Stk	**SGA1J21A02**	OT-2150	—	SS1352	—
	21 (533.4)	Offset	120	750	29 (4.5)	1.4 (0.64)	Stk	**SGA1J21A03**	—	OT-2107	—	SS2341
	21 (533.4)	Offset	240	750	29 (4.5)	1.4 (0.64)	Stk	**SGA1J21A04**	—	OT-2107	—	SS2352
	21 (533.4)	1-on-1	120	500	19 (2.9)	1.4 (0.64)	Stk	**SGA1J21AT1**	S-2050	S-2005	SD1291	SD2291
	23¾ (603.3)	Offset	120	500	17 (2.6)	1.5 (0.68)	Stk	**SGA1J23N05**	OT-2450	OT-2405	SS1361	SS2361
	23¾ (603.3)	Offset	240	500	17 (2.6)	1.5 (0.68)	Stk	**SGA1J23N06**	OT-2450	OT-2405	SS1372	SS2372
	23¾ (603.3)	Offset	120	750	25 (3.9)	1.5 (0.68)	Stk	**SGA1J23N01**	OT-2475	OT-2407	SS1391	SS2381
	23¾ (603.3)	Offset	240	750	25 (3.9)	1.5 (0.68)	Stk	**SGA1J23N02**	OT-2475	OT-2407	SS1402	SS2392
	23¾ (603.3)	Offset	120	1000	34 (5.3)	1.5 (0.68)	Stk	**SGA1J23N07**	—	OT-2401	—	SS2401
	23¾ (603.3)	Offset	240	1000	34 (5.3)	1.5 (0.68)	Stk	**SGA1J23N03**	—	OT-2401	—	SS2412
	23¾ (603.3)	Offset	240	1500	51 (7.9)	1.5 (0.68)	Stk	**SGA1J23N04**	—	OT-2415	—	—
	23¾ (603.3)	1-on-1	240	250	8 (1.2)	1.5 (0.68)	Stk	**SGA1J23NT1**	S-2425	—	SD1322	—
	23¾ (603.3)	1-on-1	240	500	17 (2.6)	1.5 (0.68)	Stk	**SGA1J23NT3**	S-2450	S-2404	SD1342	SD2322
	23¾ (603.3)	1-on-1	240	750	25 (3.9)	1.5 (0.68)	Stk	**SGA1J23NT5**	—	S-2407	—	SD2352
	23¾ (603.3)	1-on-1	120	1000	33 (5.1)	1.5 (0.68)	Stk	**SGA1J23NT6**	—	S-2401	—	SD2361
	23¾ (603.3)	1-on-1	240	1000	33 (5.1)	1.5 (0.68)	Stk	**SGA1J23NT7**	—	S-2401	—	SD2372
	23¾ (603.3)	1-on-1	240	1500	50 (7.7)	1.5 (0.68)	Stk	**SGA1J23NT8**	—	S-2415	—	—
	25½ (647.7)	Offset	120	500	16 (2.5)	1.7 (0.77)	Stk	**SGA1J25J01**	OT-2550	—	SS1421	—
	25½ (647.7)	Offset	240	500	16 (2.5)	1.7 (0.77)	Stk	**SGA1J25J02**	OT-2550	—	SS1432	—
	25½ (647.7)	Offset	120	750	23 (3.6)	1.7 (0.77)	Stk	**SGA1J25J03**	OT-2575	OT-2507	SS1441	SS2421
	25½ (647.7)	Offset	240	750	23 (3.6)	1.7 (0.77)	Stk	**SGA1J25J04**	OT-2575	OT-2507	SS1452	SS2432
	25½ (647.7)	Offset	240	1000	31 (4.8)	1.7 (0.77)	Stk	**SGA1J25J05**	—	OT-2501	—	SS2452
	26¾ (679.5)	Offset	240	700	21 (3.3)	1.7 (0.77)	Stk	**SGA1J26N01**	OT-2670	—	SS1472	—
	26¾ (679.5)	Offset	240	1000	29 (4.5)	1.7 (0.77)	Stk	**SGA1J26N02**	—	OT-2601	—	SS2472
	30½ (774.7)	Offset	120	750	19 (2.9)	2.0 (0.91)	Stk	**SGA1J30J02**	OT-3075	OT-3007	SS1481	—
	30½ (774.7)	Offset	240	750	19 (2.9)	2.0 (0.91)	Stk	**SGA1J30J03**	OT-3075	OT-3007	SS1492	SS2482
	30½ (774.7)	1-on-1	240	750	19 (2.9)	2.0 (0.91)	Stk	**SGA1J30JT1**	S-3075	S-3007	SD1452	—
	33½ (850.9)	Offset	240	750	17 (2.6)	2.2 (1.0)	Stk	**SGA1J33J01**	OT-3375	OT-3307	SS1522	SS2522
	33½ (850.9)	1-on-1	240	1000	22 (3.4)	2.2 (1.0)	Stk	**SGA1J33JT1**	—	S-3301	—	SD2472
	35⅞ (911.2)	Offset	120	1000	21 (3.3)	2.3 (1.0)	Stk	**SGA1J35R04**	OT-3610	SS1531	SS1531	—
	35⅞ (911.2)	Offset	240	1000	21 (3.3)	2.3 (1.0)	Stk	**SGA1J35R03**	OT-3610	—	SS1542	SS2532
	35⅞ (911.2)	Offset	240	1500	31 (4.8)	2.3 (1.0)	Stk	**SGA1J35R01**	—	OT-3601	SS2552	—
	35⅞ (911.2)	1-on-1	240	1000	21 (3.3)	2.3 (1.0)	Stk	**SGA1J35RT1**	S-3610	S-3601	SD1492	SD2492
	38½ (977.9)	Offset	120	1000	19 (2.9)	2.5 (1.1)	Stk	**SGA1J38J02**	OT-3810	OT-3801	SS1581	SS2561
	38½ (977.9)	Offset	240	1500	29 (4.5)	2.5 (1.1)	Stk	**SGA1J38J03**	—	OT-3815	—	—
	42½(1079.5)	Offset	240	1500	26 (4.0)	2.8 (1.3)	Stk	**SGA1J42J01**	—	OT-4315	SS1632	SS2632
	47⅞(1216.0)	Offset	240	2250	34 (5.3)	3.1 (1.4)	Stk	**SGA1J47R01**	—	OT-4822	—	—

Strip Heaters

375 Finned Strip

Like its 375 strip counterpart, the 375 finned strip heater is constructed of highly-compacted MgO-based insulation, which conducts heat efficiently from the nickel-chrome element wire to the sheath. Two inch wide (51 mm) aluminized steel fins are attached in a way that maximizes surface contact so that heat is displaced and transferred into the air faster.

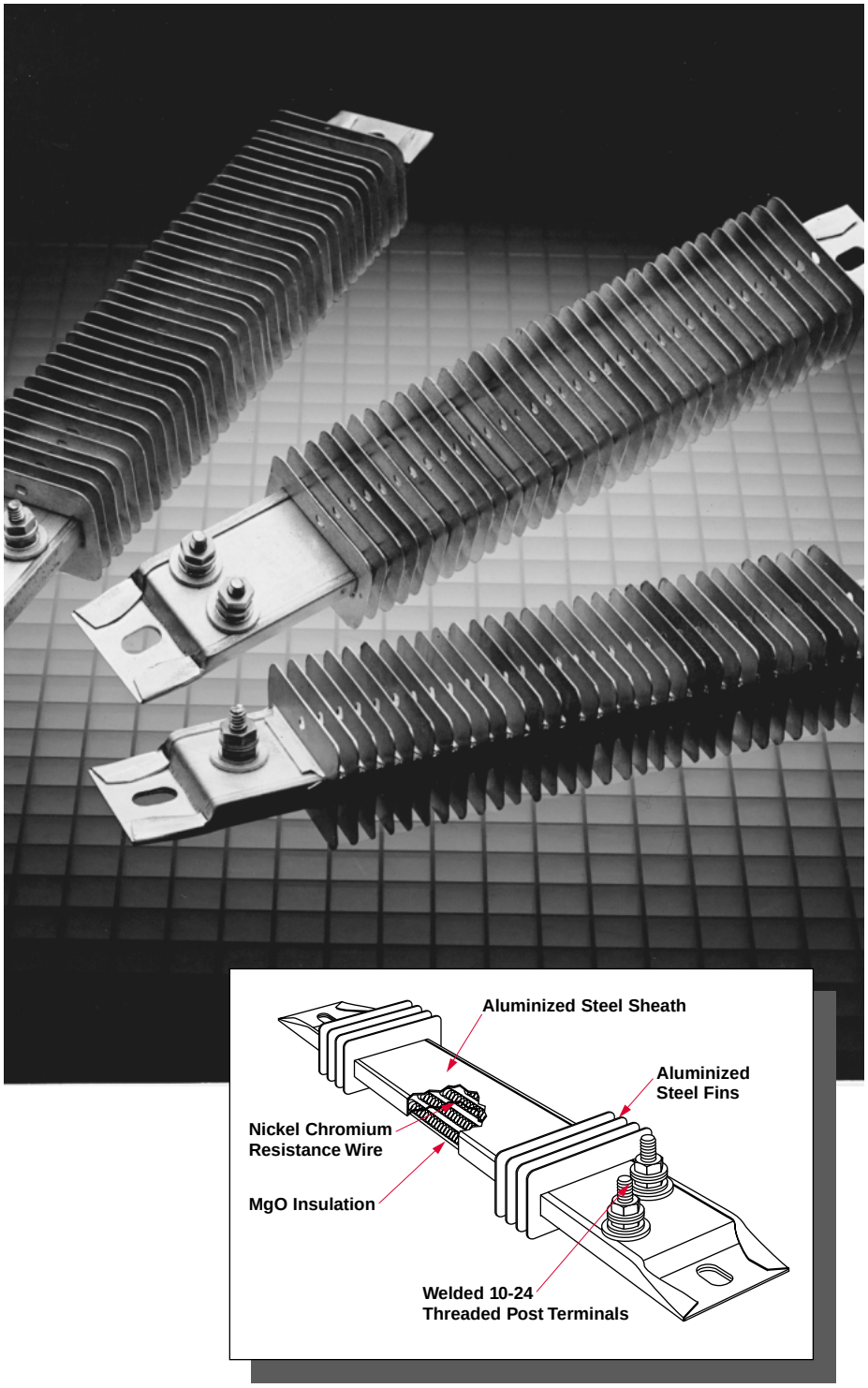

Performance Capabilities

- Aluminized steel sheath temperatures to 1100°F (595°C)
- UL® approved to 240V~(ac) (File No. E52951)
- CSA approved to 600V~(ac) (File No. LR7392)

Features and Benefits

- **Nickel-chrome element wire** is centered in the heater to uniformly heat the strip.
- **Aluminized steel sheath** operates at higher temperatures and resists corrosion better than iron-sheathed heaters.
- **Optional 430 stainless steel sheath** is available for more corrosive environments.
- **Welded post terminals** produce strong, trouble-free connections.
- **Rigid ⅜-inch (9.5 mm) thick design** enables the 375 finned strip heater to fit into many existing applications.
- **Available lengths** from 5½ inches (140 mm) to 48 inches (1220 mm).

Applications

- Shrink tunnels
- Duct heaters
- Space heaters
- Drying ovens
- Incubators
- Air heating
- Load bank resistors
- Heat curing
- Ink drying
- Food warmers
- Moisture protection
- Process welding
- Dehumidifiers
- Stress relieving ovens

UL® is a registered trademark of Underwriter's Laboratories, Inc.

Strip Heaters

375 Finned Strip

Applications and Technical Data

Calculating Watt Density

Use the graph and formulas to make certain that the maximum allowable watt density for the heater will not be exceeded in the application.

Open air watt density is calculated for total heated surface area.

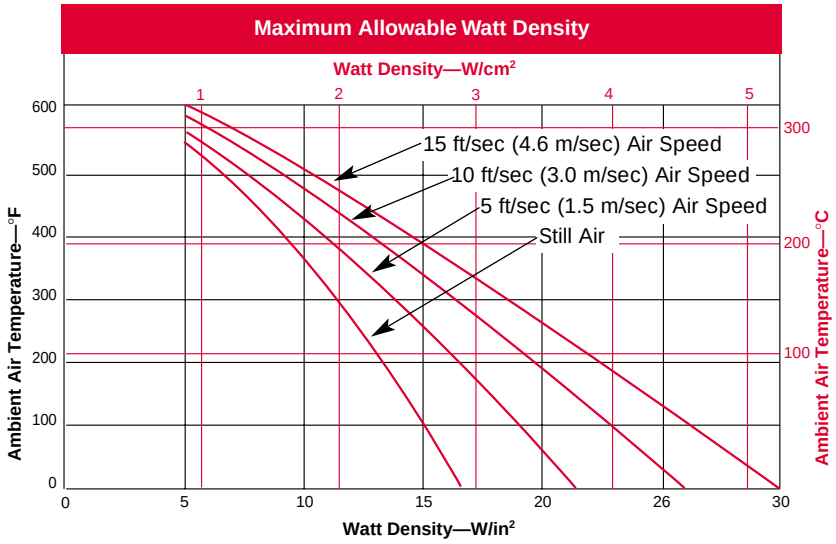

Formulas:

$$\text{Watt Density} = \frac{\text{Wattage}}{\text{Heated Area}}$$

Heated Area
(Offset Terminals) = [Overall Length (A) - 4.00 in.] x 3.75 in.
= [Overall Length (A) - 101.6 mm] x 95.25 mm

Heated Area
(Parallel Terminals) = [Overall Length (A) - 3.12 in.] x 3.75 in.
= [Overall Length (A) - 79.25 mm] x 95.25 mm

Heated Area
(One-on-One Terminals) = [Overall Length (A) - 4.25 in.] x 3.75 in.
= [Overall Length (A) - 107.95 mm] x 95.25 mm

Termination Options

Offset Terminals

Two 10-24 threaded post terminals are offset from each other on the same end.

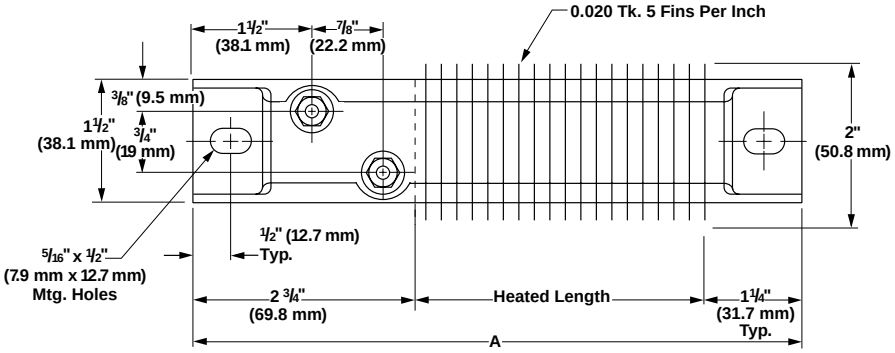

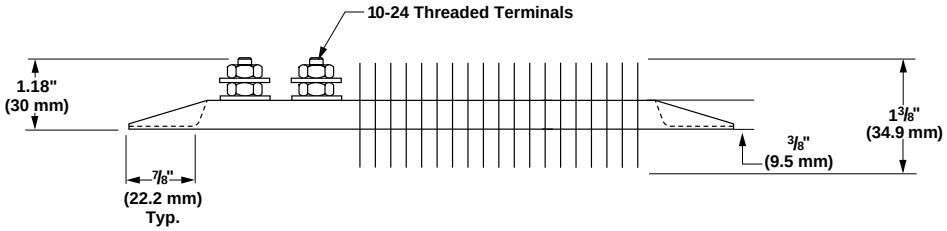

Strip Heaters

375 Finned Strip

Termination Options
Continued

Parallel Terminals

Two 10-24 threaded post terminals are used; both terminals on one end.

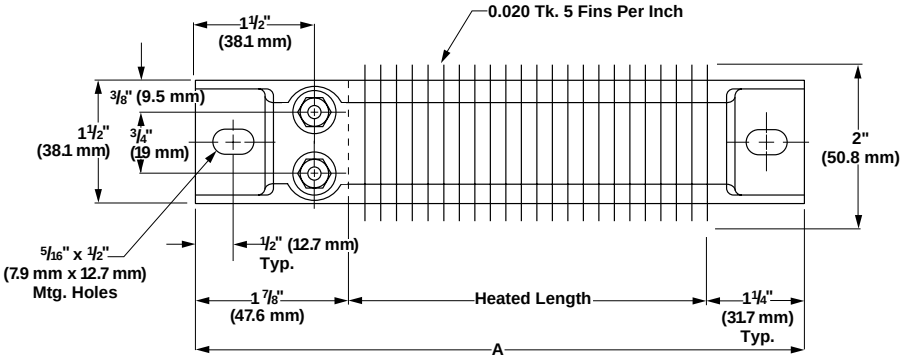

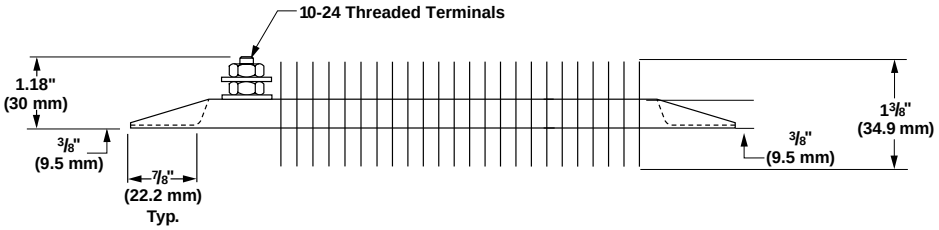

One-on-One Terminals

Two 10-24 threaded post terminals are used; one terminal on each end.

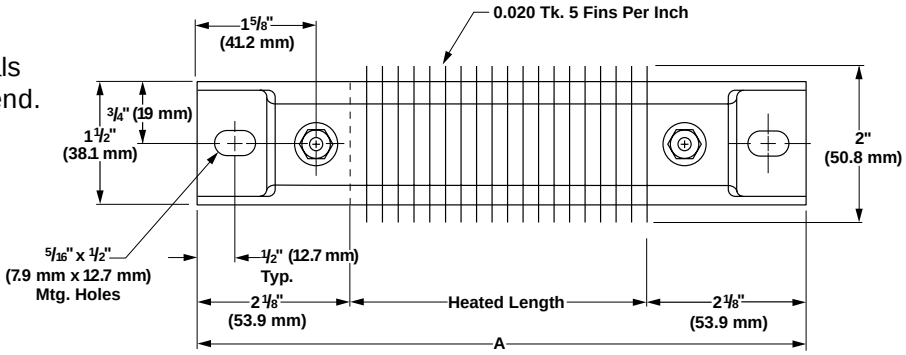

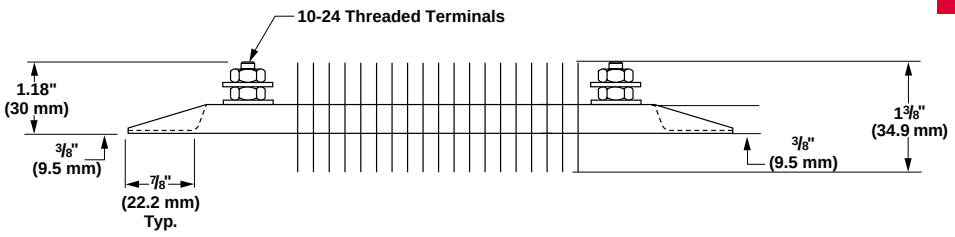

Secondary Insulation Bushings

Insulators are suitable for use when air heating and/or voltage to ground is a concern. Secondary insulation bushing kit part number **Z5230** contains one set of bushings for one heater. To accommodate the bushings, 17/32 x 11/16 inch diameter mounting holes **must** be specified when ordering.

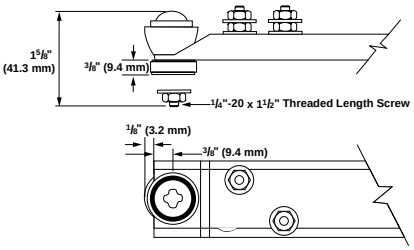

Ceramic Terminal Covers

A convenient and economical way to insulate post terminals. Sized for standard length posts. 10-24 screw thread size. These are supplied as an accessory item and shipped separately. Specify **Z-4918** and quantity.

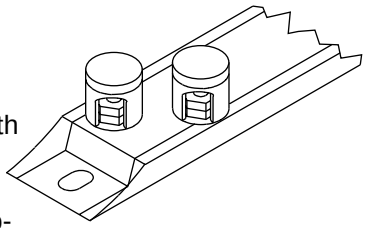

F.O.B.: St. Louis, Missouri

375 Finned Strip

How to Order

To order stock 375 finned strip heater, specify:

- 375 finned strip
- Quantity
- Watlow code number
- Voltage
- Wattage
- Removal of mounting tabs, if desired

If stock units do not meet application needs, Watlow can manufacture 375 finned strip heaters to special requirements. For **made-to-order** units, please specify, in addition to above information:

- Width
- Length, including mounting tabs
- Terminal type (offset, parallel or one-on-one)

Availability

Assembly Stock: Shipment within three working days

Made-to-Order: Please consult your Watlow sales engineer or authorized distributor.

Width inches (mm)	Termination	Length inches (mm)	Volts	Power (Watts)	W/in² (W/cm²)	Approx. Net Wt. lbs (kg)	Availability	Code No.
1½ (38.1)	Parallel	5½ (139.7)	120	125	14 (2.1)	0.5 (0.23)	Assy. Stock	**SGA1J5JY2**
	Parallel	5½ (139.7)	120	250	28 (4.3)	0.5 (0.23)	Assy. Stock	**SGA1J5JY3**
	Parallel	6 (152.4)	120	150	14 (2.1)	0.5 (0.23)	Assy. Stock	**SGA1J6AY1**
	Parallel	6 (152.4)	240	150	14 (2.1)	0.5 (0.23)	Assy. Stock	**SGA1J6AY2**
	Parallel	6 (152.4)	120	300	28 (4.3)	0.5 (0.23)	Assy. Stock	**SGA1J6AY3**
	Parallel	6 (152.4)	240	300	28 (4.3)	0.5 (0.23)	Assy. Stock	**SGA1J6AY4**
	Offset	7½ (190.5)	120	150	12 (1.8)	0.7 (0.32)	Assy. Stock	**SGA1J7JW1**
	Offset	7½ (190.5)	240	150	12 (1.8)	0.7 (0.32)	Assy. Stock	**SGA1J7JW2**
	Offset	7½ (190.5)	240	200	15 (2.3)	0.7 (0.32)	Assy. Stock	**SGA1J7JW3**
	Offset	8 (203.2)	120	150	10 (1.5)	0.7 (0.32)	Assy. Stock	**SGA1J8AW2**
	Offset	8 (203.2)	240	150	10 (1.5)	0.7 (0.32)	Assy. Stock	**SGA1J8AW3**
	Offset	8 (203.2)	120	175	12 (1.8)	0.7 (0.32)	Assy. Stock	**SGA1J8AW4**
	Offset	8 (203.2)	240	175	12 (1.8)	0.7 (0.32)	Assy. Stock	**SGA1J8AW5**
	Offset	8 (203.2)	120	250	17 (2.6)	0.7 (0.32)	Assy. Stock	**SGA1J8AW6**
	Offset	8 (203.2)	240	250	17 (2.6)	0.7 (0.32)	Assy. Stock	**SGA1J8AW7**
	Offset	8 (203.2)	120	400	27 (4.2)	0.7 (0.32)	Assy. Stock	**SGA1J8AW8**
	Offset	8 (203.2)	240	400	27 (4.2)	0.7 (0.32)	Assy. Stock	**SGA1J8AW9**
	Offset	8 (203.2)	120	500	33 (5.1)	0.7 (0.32)	Assy. Stock	**SGA1J8AW10**
	Offset	8 (203.2)	240	500	33 (5.1)	0.7 (0.32)	Assy. Stock	**SGA1J8AW11**
	Offset	10½ (266.7)	120	250	10 (1.5)	0.9 (0.40)	Assy. Stock	**SGA1J10JW1**
	Offset	10½ (266.7)	240	250	10 (1.5)	0.9 (0.40)	Assy. Stock	**SGA1J10JW2**
	Offset	10½ (266.7)	120	350	14 (2.1)	0.9 (0.40)	Assy. Stock	**SGA1J10JW3**
	Offset	10½ (266.7)	240	350	14 (2.1)	0.9 (0.40)	Assy. Stock	**SGA1J10JW4**
	Offset	10½ (266.7)	120	400	16 (2.5)	0.9 (0.40)	Assy. Stock	**SGA1J10JW5**
	Offset	10½ (266.7)	240	400	16 (2.5)	0.9 (0.40)	Assy. Stock	**SGA1J10JW6**

CONTINUED

Note: 375 finned strip heaters with one-on-one terminations are available only as a manufactured item. Please contact a Watlow sales engineer for additional information.

Note: 5/16 x ½ inch (7.9 x 12.7 mm) mounting slots are supplied on all 375 finned strip heaters. Tabs can be removed upon request.

Strip Heaters

375 Finned Strip

Width inches (mm)	Termination	Length inches (mm)	Volts	Power (Watts)	W/in² (W/cm²)	Approx. Net Wt. lbs (kg)	Availability	Code No.
1½ (38.1)	Offset	12 (304.8)	120	250	8 (1.2)	1.0 (0.45)	Assy. Stock	**SGA1J12AW1**
	Offset	12 (304.8)	240	250	8 (1.2)	1.0 (0.45)	Assy. Stock	**SGA1J12AW2**
	Offset	12 (304.8)	120	350	12 (1.8)	1.0 (0.45)	Assy. Stock	**SGA1J12AW3**
	Offset	12 (304.8)	240	350	12 (1.8)	1.0 (0.45)	Assy. Stock	**SGA1J12AW4**
	Offset	12 (304.8)	120	500	17 (2.6)	1.0 (0.45)	Assy. Stock	**SGA1J12AW5**
	Offset	12 (304.8)	240	500	17 (2.6)	1.0 (0.45)	Assy. Stock	**SGA1J12AW6**
	Offset	14 (355.6)	120	300	8 (1.2)	1.2 (0.54)	Assy. Stock	**SGA1J14AW1**
	Offset	14 (355.6)	240	300	8 (1.2)	1.2 (0.54)	Assy. Stock	**SGA1J14AW2**
	Offset	14 (355.6)	120	500	13 (2.0)	1.2 (0.54)	Assy. Stock	**SGA1J14AW3**
	Offset	14 (355.6)	240	500	13 (2.0)	1.2 (0.54)	Assy. Stock	**SGA1J14AW4**
	Offset	15¼ (387.4)	120	325	8 (1.2)	1.4 (0.64)	Assy. Stock	**SGA1J15EW1**
	Offset	15¼ (387.4)	240	325	8 (1.2)	1.4 (0.64)	Assy. Stock	**SGA1J15EW2**
	Offset	15¼ (387.4)	240	500	12 (1.8)	1.4 (0.64)	Assy. Stock	**SGA1J15EW3**
	Offset	17⅞ (454.0)	120	350	8 (1.2)	1.6 (0.73)	Assy. Stock	**SGA1J17RW1**
	Offset	17⅞ (454.0)	240	350	8 (1.2)	1.6 (0.73)	Assy. Stock	**SGA1J17RW2**
	Offset	17⅞ (454.0)	120	375	9 (1.4)	1.6 (0.73)	Assy. Stock	**SGA1J17RW3**
	Offset	17⅞ (454.0)	240	375	9 (1.4)	1.6 (0.73)	Assy. Stock	**SGA1J17RW4**
	Offset	17⅞ (454.0)	120	500	12 (1.8)	1.6 (0.73)	Assy. Stock	**SGA1J17RW5**
	Offset	17⅞ (454.0)	240	500	12 (1.8)	1.6 (0.73)	Assy. Stock	**SGA1J17RW6**
	Offset	17⅞ (454.0)	120	750	18 (2.8)	1.6 (0.73)	Assy. Stock	**SGA1J17RW7**
	Offset	17⅞ (454.0)	240	750	18 (2.8)	1.6 (0.73)	Assy. Stock	**SGA1J17RW8**
	Offset	17⅞ (454.0)	120	1000	24 (3.7)	1.6 (0.73)	Assy. Stock	**SGA1J17RW9**
	Offset	17⅞ (454.0)	240	1000	24 (3.7)	1.6 (0.73)	Assy. Stock	**SGA1J17RW10**
	Offset	19½ (495.3)	240	350	6 (.9)	1.7 (0.77)	Assy. Stock	**SGA1J19JW2**
	Offset	19½ (495.3)	120	500	9 (1.4)	1.7 (0.77)	Assy. Stock	**SGA1J19JW3**
	Offset	19½ (495.3)	240	500	9 (1.4)	1.7 (0.77)	Assy. Stock	**SGA1J19JW4**
	Offset	19½ (495.3)	240	750	13 (2.0)	1.7 (0.77)	Assy. Stock	**SGA1J19JW5**
	Offset	19½ (495.3)	240	1000	17 (2.6)	1.7 (0.77)	Assy. Stock	**SGA1J19JW6**
	Offset	21 (533.4)	120	500	8 (1.2)	1.9 (0.86)	Assy. Stock	**SGA1J21AW3**
	Offset	21 (533.4)	240	500	8 (1.2)	1.9 (0.86)	Assy. Stock	**SGA1J21AW4**
	Offset	21 (533.4)	120	750	12 (1.8)	1.9 (0.86)	Assy. Stock	**SGA1J21AW5**
	Offset	21 (533.4)	240	750	12 (1.8)	1.9 (0.86)	Assy. Stock	**SGA1J21AW6**

CONTINUED

Note: 375 finned strip heaters with one-on-one terminations are available only as a manufactured item. Please contact a Watlow sales engineer for additional information.

Note: 5⁄16 x ½ inch (7.9 x 12.7 mm) mounting slots are supplied on all 375 finned strip heaters. Tabs can be removed upon request.

Strip Heaters

375 Finned Strip

Width inches (mm)	Termination	Length inches (mm)	Volts	Power (Watts)	W/in² (W/cm²)	Approx. Net Wt. lbs (kg)	Availability	Code No.
1½ (38.1)	Offset	23¾ (603.3)	240	500	7 (1.0)	2.1 (0.95)	Assy. Stock	**SGA1J23NW3**
	Offset	23¾ (603.3)	240	750	10 (1.5)	2.1 (0.95)	Assy. Stock	**SGA1J23NW5**
	Offset	23¾ (603.3)	120	1000	14 (2.1)	2.1 (0.95)	Assy. Stock	**SGA1J23NW6**
	Offset	23¾ (603.3)	240	1000	14 (2.1)	2.1 (0.95)	Assy. Stock	**SGA1J23NW7**
	Offset	23¾ (603.3)	240	1500	20 (3.1)	2.1 (0.95)	Assy. Stock	**SGA1J23NW8**
	Offset	25½ (647.7)	120	500	6 (.9)	2.3 (1.0)	Assy. Stock	**SGA1J25JW2**
	Offset	25½ (647.7)	240	500	6 (.9)	2.3 (1.0)	Assy. Stock	**SGA1J25JW3**
	Offset	25½ (647.7)	120	750	9 (1.4)	2.3 (1.0)	Assy. Stock	**SGA1J25JW4**
	Offset	25½ (647.7)	240	750	9 (1.4)	2.3 (1.0)	Assy. Stock	**SGA1J25JW5**
	Offset	25½ (647.7)	240	1000	12 (1.8)	2.3 (1.0)	Assy. Stock	**SGA1J25JW6**
	Offset	26¾ (679.5)	240	700	8 (1.2)	2.4 (1.1)	Assy. Stock	**SGA1J26NW2**
	Offset	26¾ (679.5)	240	1000	12 (1.8)	2.4 (1.1)	Assy. Stock	**SGA1J26NW3**
	Offset	30½ (774.7)	120	750	8 (1.2)	2.7 (1.2)	Assy. Stock	**SGA1J30JW1**
	Offset	30½ (774.7)	240	750	8 (1.2)	2.7 (1.2)	Assy. Stock	**SGA1J30JW2**
	Offset	33½ (850.9)	240	750	7 (1.0)	3.0 (1.4)	Assy. Stock	**SGA1J33JW1**
	Offset	35⅞ (911.2)	120	1000	8 (1.2)	3.2 (1.5)	Assy. Stock	**SGA1J35RW1**
	Offset	35⅞ (911.2)	240	1000	8 (1.2)	3.2 (1.5)	Assy. Stock	**SGA1J35RW2**
	Offset	35⅞ (911.2)	240	1500	13 (2.0)	3.2 (1.5)	Assy. Stock	**SGA1J35RW3**
	Offset	38½ (977.9)	120	1000	8 (1.2)	3.4 (1.5)	Assy. Stock	**SGA1J38JW2**
	Offset	38½ (977.9)	240	1500	11 (1.7)	3.4 (1.5)	Assy. Stock	**SGA1J38JW3**
	Offset	42½ (1079.5)	240	1500	10 (1.5)	3.8 (1.7)	Assy. Stock	**SGA1J42JW1**
	Offset	47⅞ (1216.0)	240	2250	16 (2.4)	4.3 (2.0)	Assy. Stock	**SGA1J47RW2**

Note: 375 finned strip heaters with one-on-one terminations are available only as a manufactured item. Please contact a Watlow sales engineer for additional information.

Note: 5/16 x ½ inch (7.9 x 12.7 mm) mounting slots are supplied on all 375 finned strip heaters. Tabs can be removed upon request.

Thick Film Heaters

Thick Film Heating Technology

Watlow's thick film heating technology provides an innovative new way to deliver heat to various applications that require a compact heating solution. Greater control of your heating applications can now be achieved with this breakthrough technology that offers a high-performance, low-profile design that can be intimately fitted to flat and cylindrical surfaces.

The direct surface contact of the thick film heater allows the heat to be put precisely where it's needed. Thick film also provides superior heat transfer and fast thermal response. Glass-based films provide a non-porous surface that prevents moisture absorption.

Thick film resistance heaters are constructed of several layers of material. These materials consist of a substrate, a base dielectric material, a resistor, and a final dielectric layer.

Features and Benefits

- **Low profile, compact size** can be intimately fitted to flat and cylindrical surfaces.
- **UL®, CSA and CE pending.** Contact factory for current status of agency recognitions.
- **Direct contact with substrate** allows heater to respond faster and provide higher operating efficiency.
- **Precise heater circuit patterns** allow for designs with precision temperature uniformity.
- **Robust industrial heaters** designed to operate in 24 x 7 x 365 hour industrial applications.

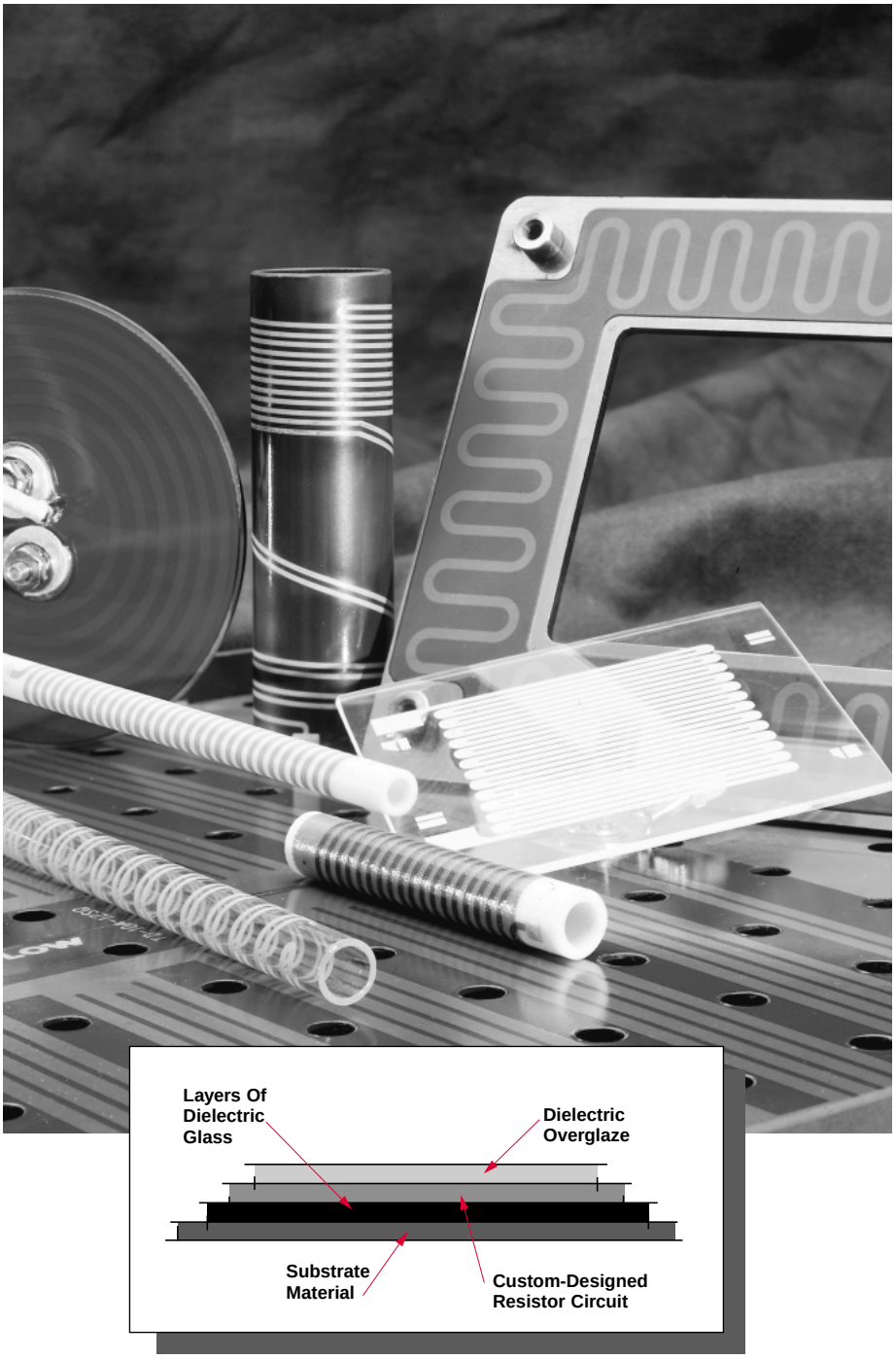

Applications

- Digital printing and copiers
- Food processing
- Gas and fluid heating
- Life sciences
- Packaging, sealers and dispensers
- Plastics processing
- Semiconductor processing
- General applications that require high wattages and watt densities within a small area
- General applications that require precision distributed wattage patterns for optimal heater solution flexibility

UL® is a registered trademark of Underwriter's Laboratories, Inc.

Thick Film Heating Technology

Material Comparison Guide

Watlow's thick film heater technology provides an innovative way to heat numerous applications that allow only minimal space for heat input. This new technology offers a high-performance, low-profile, CAD-generated heater design that can be easily fitted to flat and cylindrical surfaces.

Substrate materials have different thermal expansion rates; therefore Watlow utilizes multiple dielectric and resistor ink combinations to match expansion characteristics. The specified substrate material chosen for the thick film heater is determined by the process compatibility, operating temperature and cycle rates. This easy-to-use, cross-reference guide will help in selecting the proper base material for specific applications.

Material:	Metals				Ceramics		Glass
Due to thick film technology advancements, please check with factory for latest information regarding available materials.	Type 316 SS	Type 430 SS	Inconel® Alloy 600	Aluminum [Al]	Alumina [Al_2O_3] 96-99.9% purity	Aluminum Nitride [AlN]	Quartz Type GE 214
Description:	Austenitic stainless steel; good corrosion resistance and strength.	Ferritic stainless steel; moderate cost; good thermal stability.	Excellent mechanical properties; high strength and workability; used in severely corrosive environments.	Good machinability and thermal conductivity; limited to 350°C max. temperature.	High mechanical strength and temperature resistance; high chemical and wear resistance; excellent thermal conductivity.	Good strength and thermal conductivity; excellent thermal stability and dielectric properties.	High temperature and thermal shock resistance; low thermal conductivity; ultra pure substrate.
Applications:	Semiconductor, food equipment, constant temperature baths	Food processing, packaging, plastics	Food processing, packaging, plastics	Semiconductor, life sciences, packaging	Semiconductor, digital printing, copying, life sciences, electronics	Semiconductor, life sciences, R&D	Semiconductor, life sciences, analytical equipment
Color:	N/A	N/A	N/A	N/A	White, Black	Gray	Transparent
Density (lb/ft³):	501.12	483.84	525.31	168.5	237.23	203.52	137.34
Dielectric constant:	N/A	N/A	N/A	N/A	9.3	8.9	3.75
Dielectric strength (V/in) @ 77°F (25°C):	N/A	N/A	N/A	N/A	2.54E+05	3.81E+05	1.27E+06
Electrical resistivity (ohm ft) @ 77°F (25°C):	2.42E-06	1.96E-06	3.38E-06	1.04E+01	N/A	3.28E+13	2.30E+06
% Elongation:	50	25	47	25	N/A	N/A	N/A
Specific heat BTU/lb*°F (KJ/kg*°C):	0.12 (0.50)	0.11 (0.46)	0.106 (0.444)	0.215 (0.900)	11.41 (47.77)	9.60 (40.19)	0.1600 (0.6699)
Thermal conductivity BTU/ft*hr*°F (KJ/cm*°C):	9.42 (0.586)	15.08 (0.940)	6.67 (0.416)	130 (8.100)	14.5 (0.903)	46.22 (2.88)	0.8089 (5.040)
Coefficient of thermal expansion (ppm/°C for ceramics, cm/cm * °C for others):	8.9	5.8	7.4	45.4	6.7	4.3	5.5×10^{-7}
Substrate softening temperature °F (°C):	1400 (760)	1300 (705)	1500 (815)	1000 (540)	N/A	*oxidize* 1472 (800)	3061 (1683)
Notes:	**Material pending.** Consult factory for material availability.	Stable to 20 gauge thickness with minimal warpage; this is the standard substrate.	**Material pending.** Consult factory for material availability.	**Material pending.** Consult factory for material availability.	Can be cut or cast as needed; excellent low cost ceramic.	**Material pending.** Consult factory for material availability.	Excellent corrosion resistance; no dielectric coat available; choice material for corrosive liquids; except hydrofluoric.

Note: Maximum voltage, 240V; single- or three-phase. Dual voltages are available, consult Watlow.

Inconel® is a registered trademark of Special Metals Corporation.

Thick Film Heaters

Thick Film Heating Technology

Conduction Heaters

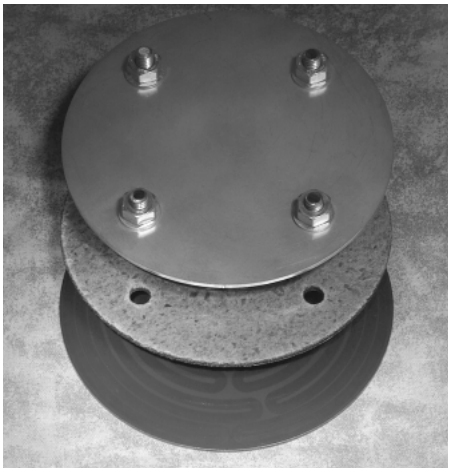

Watlow's new 14 gauge, 430 series stainless steel thick film conduction heaters are ideal for use in many applications where fast response and uniformity are essential. These high-performance heaters use thick film technology to provide maximum temperature response in a compact package.

Thick film conduction heaters provide a low-profile heater in a variety of shapes. These shapes include two-dimensional circular, rectangular and square forms. Due to the direct surface contact, thick film heaters ensure greater heat transfer through thermally stable substrates and precision heater pattern.

This new technology can be applied in areas where space is at a premium or where conventional heaters cannot be used because of limited voltage and wattage combinations.

Features and Benefits

- **1025°F (550°C) maximum substrate temperature** allows for higher process temperatures than most conduction heater technologies.
- **UL®, CSA and CE pending.** Consult factory for current status of agency recognitions.
- **High watt densities for clamp-on applications** allow for precise, repeatable wattage distribution, and uniform temperature distribution
- **Threaded stud termination** produces strong, trouble-free connections.
- **Glass-based thick film technology** eliminates moisture problems and has low current leakage.

Applications

- Designed for use in foodservice, industrial machines, life sciences, plastics and semiconductor applications. A clamp-on thick film heater provides the best possible combination of heat transfer, thermal efficiency and temperature uniformity. For example: clamping the thick film conduction heater on to a 316 stainless steel pan in foodservice applications for uniform cooking or heating oil.

Construction

Thick film conduction heaters designed for clamp-on applications are supplied as a three-part assembly; heater, mica insulator and clamping plate. Overall height of assembly is less than one inch.

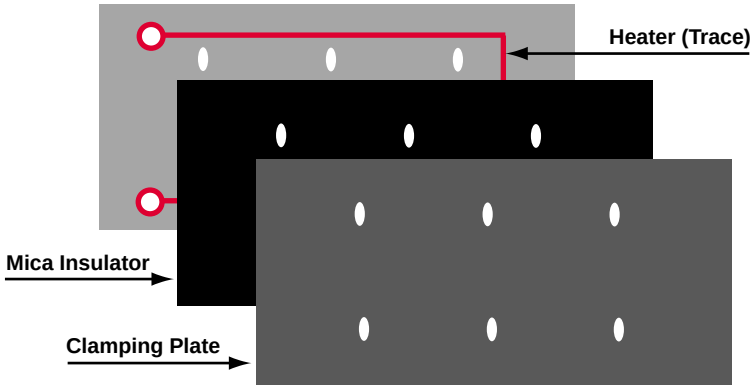

Thick Film Heating Technology

Conduction Heaters

Stock Product List

Heater Size inch	Heater Size (mm)	Voltage	Wattage	W/in²	(W/cm²)	Approximate Assembly Weight lbs	Approximate Assembly Weight (kg)	Watlow Code Number
Round								
4.5	(114) dia	120	325	20.4	(3.2)	1.10	(0.50)	**Consult Factory**
6	(152) dia	120	850	30.1	(4.7)	2.74	(1.24)	
6	(152) dia	240	1125	39.8	(6.1)	2.74	(1.24)	
8	(203) dia	240	2000	39.8	(6.1)	4.91	(2.23)	
Square								
2.25 X 2.25	(57 X 57)	120	100	25	(3.9)	0.27	(0.12)	
4 X 4	(102 X 102)	120	400	25	(3.9)	1.61	(0.73)	**Consult Factory**
6 X 6	(152 X 152)	120	1250	34.7	(5.4)	3.74	(1.70)	
6 X 6	(152 X 152)	240	1450	40.3	(6.6)	3.74	(1.70)	
8 X 8	(203 X 203)	240	2500	39.1	(6.1)	6.36	(2.88)	
Rectangle								
2 X 4	(51 X 102)	120	240	30	(4.7)	0.47	(0.21)	**Consult Factory**
4 X 6	(102 X 152)	120	725	30	(4.7)	2.46	(1.12)	
6 X 8	(152 X 203)	240	1920	40	(6.2)	5.01	(2.27)	

Note: Size and wattage may vary with future design enhancements. Please consult factory for current wattage information.

Thick Film Heaters

Thick Film Heating Technology

Nozzle Heater

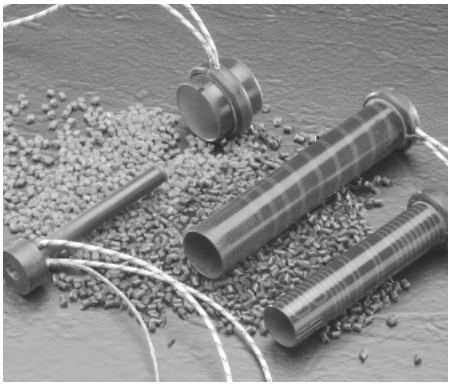

Because the hot runner nozzle is the final melt path between the manifold and the gate area, temperature uniformity is critical to avoid differences in melt viscosity. Whether it's hot spots causing thermal degradation of the plastic, or cold spots causing flow restrictions, both affect the final part quality and consistency from shot to shot.

Watlow's innovative thick film heating technology provides the injection molding industry with a patented (U.S. patent number 5,973,296) high-performance, low profile hot runner nozzle heater. The direct surface contact of the thick film material to the cylindrical stainless steel sleeve creates optimal heat transfer while the non-porous glass film prevents moisture absorption resulting in dielectric failure in other heaters.

Features and Benefits

- **Uniform thermal profile and ability to pattern heater layout** results in uniform melt temperature for equal cavity filling and improved part quality; eliminates hot and cold spots.
- **Low thermal mass** allows quicker heat up and less thermal lag between the heater and the nozzle.
- **Extremely low radial profile** allows closer pitch – center-to-center distance – between nozzles for higher nozzle density and more parts per mold.
- **Moisture-resistant non-porous glass film construction** eliminates need for soft starting, minimizes current leakage and ultimately reduces cost by eliminating special need of GFI protection.
- **UL®, CSA and CE pending**. Contact factory for current status of agency approval.

Installation

The thick film nozzle heaters are designed with the optimum diametric clearance of 0.0015 inch (0.038 mm) above the actual nozzle. This clearance allows for easy insertion and removal of the heater and excellent heat transfer without the need for clamping, anti-seize or heat sink compound with the thick film nozzle heater.

Nozzle surface preparation may be necessary if the nozzle has any surface contamination or other irregularities. Cleaning of the used nozzle body surface is easily accomplished with light sand blasting of the surface and then a light buffing of the surface with a piece of emery cloth. After the cleaning operation the nozzle heater should slip on and off very easily. Forcing a heater on to a nozzle may result in heater damage and possible failure after it has been in operation.

Substrate I.D.

- 0.25 inch (6.35 mm) to 1.5 inch (38.1 mm)

Substrate Length

- 1 inch (25.4 mm) to 8 inches (203.2 mm)

Consult factory for other diameters and lengths.

Distributed Wattage

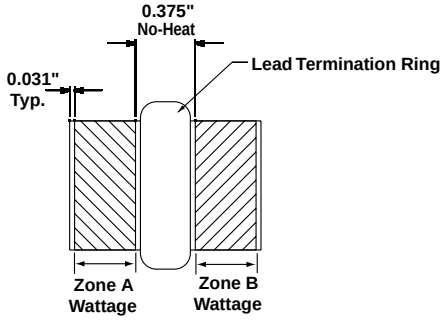

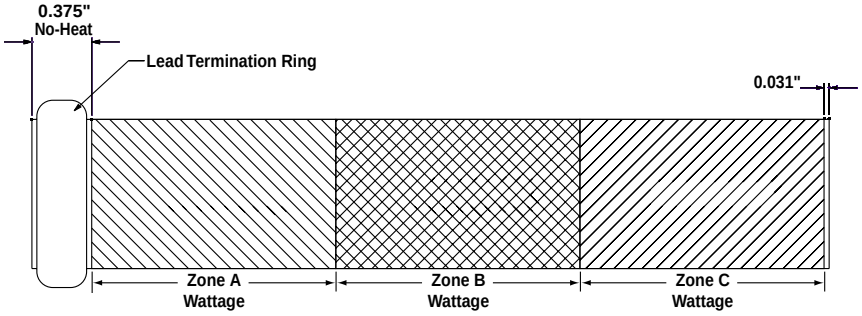

Thick Film Heating Technology

Nozzle Heater

Continued

Thick Film Nozzle Heater Response Test
Thick Film vs. Axial Clamped Cable

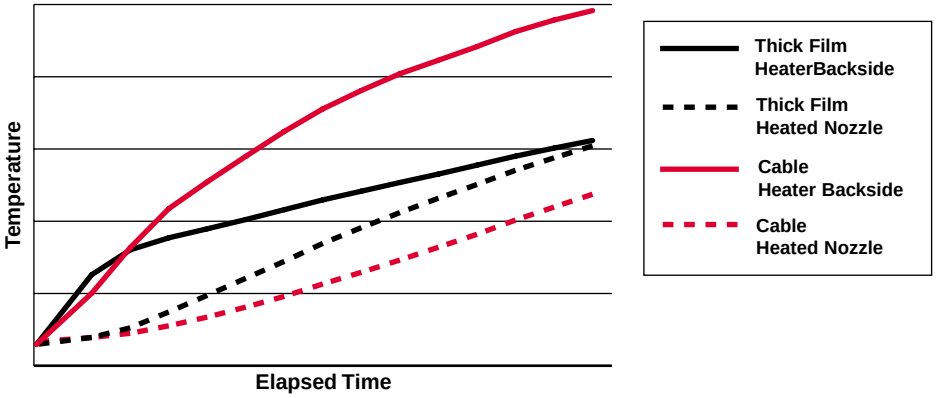

Watlow thick film technology heaters offer five distinct competitive advantages over cable heater technology:

1. Uniform temperature profile
2. No requirement for clamping of the heater
3. High dielectric barrier with agency recognition pending UL®, CSA and CE – eliminates need for softstart
4. Lower heater operating temperatures
5. Precise and repeatable wattage distribution

Precise Wattage Distribution

Thick film nozzle heaters rated to 1025°F (550°C) provide superior temperature uniformity by putting the energy exactly where it is needed.

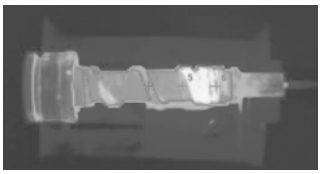

Temperature distribution using standard coiled cable heater.

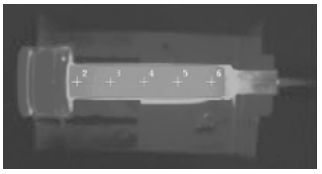

Temperature distribution using thick film heating technology.

Thick Film Heaters

Thick Film Heating Technology

Ultra Pure, Thick Film Quartz Heater Modules

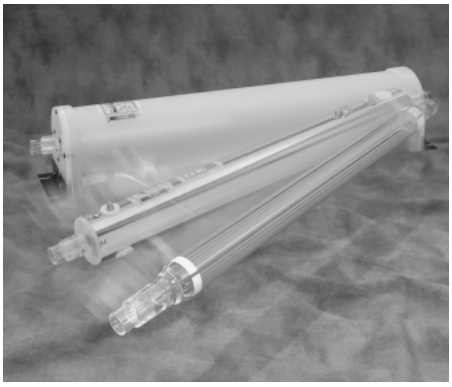

Watlow's new ultra pure, thick film quartz heater modules utilize a recently patented (U.S. patent number 6,037,574) thick-film-on-quartz technology. These high-watt density heater modules provide a superior heating method for deionized (DI) water and aggressive chemicals.

The primary benefits of thick film heating include:

- Reduction in the size of the heater modules by 50 percent or more of existing or current heating technologies, therefore saving space in expensive tools, cleanrooms and wafer fabs
- Elimination of the need for clean-dry-air (CDA) purge required in most infrared (IR) heating systems
- Reduction of the possibility of quartz devitrification that can occur in high temperature IR heating systems
- Elimination of potential metal contamination associated with Teflon® (PTFE) heating systems
- Reduction of preventative maintenance (PM) and increased tool uptime
- Reduced cost of ownership thru higher efficiency heat transfer

Watlow's thick film heating elements are applied directly onto the exterior surface of the quartz tubes, providing more efficient transfer of heat energy with rapid response to changes in flow and temperature.

These superior thick film heaters can be applied in areas where space is at a premium or where conventional heaters cannot be used because the voltage and wattage combination precludes using other types of resistive heaters.

The heaters can be supplied as single module units that you can integrate directly into a tool. Watlow can perform any level of integration from combining multiple modules within a single enclosure to providing a complete turnkey heater and control system.

Applications

Aggressive chemicals

- Acids
- Alkalines
- DI water

Standard Features

- Single-phase voltage
- Fire Retardant Polypropylene (FRPP) Rated 180°F (82°C) - Recommend for DI water applications
- Quartz end fittings compatible with standard ¾" Flaretek® and Flarelock® II fittings
- 2 meter long Teflon® lead wires within flexible Teflon® sleeve
- High limit sensor - 100Ω RTD for dry-fire condition (set limit control for 750° F/400°C)
- Redundant safety high limit - Pilot duty (dry contact mechanical switch)

Options

- 3-phase voltage
- Leak detector - Non-contact electro-optical switch (open collector)
- High limit sensor - Type J or K thermocouple
- Teflon® (PFA) Flaretek® and Flarelock® II interconnects for arrays
- Quartz end fittings compatable with Nippon Pillar Series 300 20 mm fittings
- Kynar® 740 (PVDF) rated 265°F (130°C) - Recommended acid applications other than hot phosphoric
- HALAR® 901 (ECTFE) - Recommended for hot phosphoric applications
- In stream process sensor

Thick Film Heating Technology

Ultra Pure, Thick Film Quartz Heater Modules

Continued

Maximum Single Quartz Modules Dimensions

- Length = Tube length + 4 inches with external fittings
- Width including flanges = 4 inches
- Depth including flanges = 4.5 inches

Notes: Consult factory for available voltage forms.
① Fluid path length includes a ¾ inch (19 mm) Flaretek®-compatible all-PFA tube union.
kW ratings are rounded to the nearest whole number.

Important: Minimum fluid flow rate (on a per-tube basis) is 0.25 GPM @ 10 psig minimum for vertical arrays.

Horizontal Array Configuration - Maximum Available Power (kW) per Array

Minimum Overall Fluid Path Length		Total Number of Series Fluid Paths in the Horizontal Array			
inch	(mm)	1	2	3	4
12	(305)	2	4	6	8
15	(381)	3	6	9	13
18	(457)	4	9	13	17
21	(533)	6	11	17	22
24	(610)	7	14	20	27
27	(686)	8	16	24	32
30	(762)	9	18	27	37
40①	(1016)	10	20	30	40
43①	(1092)	11	22	33	44
46①	(1168)	12	25	37	49
49①	(1245)	14	27	41	54
52①	(1321)	15	29	44	59
55①	(1397)	16	32	48	64
58①	(1473)	17	34	51	68
61①	(1549)	18	37	55	73

Notes: Minimum flow rate is 3.0 GPM for horizontal configurations. Multiple horizontal fluid paths are to be plumbed in a series. Consult factory for available voltage forms.
① Fluid path length includes a ¾ inch (19 mm) Flaretek®-compatible all-PFA tube union.
kW ratings are rounded to the nearest whole number.

Vertical Array Configuration - Maximum Available Power (kW) per Array

Minimum Overall Fluid Path Length		Total Number of Parallel Fluid Paths in the Vertical Array						
inch	(mm)	1	2	3	4	6	9	12
12	(305)	2	5	7	9	14	21	27
15	(381)	4	7	11	15	22	33	44
18	(457)	5	10	15	20	31	46	61
21	(533)	7	13	20	26	39	59	78
24	(610)	8	16	24	32	48	71	95
27	(686)	9	19	28	37	56	84	112
30	(762)	11	22	32	43	65	97	129
40①	(1016)	12	23	35	47	70	105	140
43①	(1092)	13	26	39	52	78	117	157
46①	(1168)	14	29	43	58	87	130	173
49①	(1245)	16	32	48	63	95	143	190
52①	(1321)	17	35	52	69	104	155	207
55①	(1397)	19	37	56	75	112	168	224
58①	(1473)	20	40	60	80	121	181	241
61①	(1549)	22	43	65	86	129	194	258

Quick Estimates of Wattage Requirements

For heating flowing water, simply calculate:

kW = GPM x temperature rise (°F) x 0.16

or

kW = Liters/minute x temperature rise (°C) x 0.076

For heating recirculation applications heating water in baths, simply calculate:

$$kW = \frac{\text{Gallons x temperature rise (°F)}}{\text{375 x Heat up time (hours)}} \quad \text{or} \quad kW = \frac{\text{Liters x temperature rise (°C)}}{\text{790 x Heat up time (hours)}}$$

Tubular and Process Assemblies

Elements and Assemblies

Watlow tubular elements and assemblies are primarily used for direct immersion in water, oils, viscous materials, solvents, process solutions and molten materials as well as air and gases.

Additionally, round and flat surface tubular elements (WATROD and FIREBAR® heaters respectively) can be used for surface heating.

WATROD and FIREBAR heating elements may be purchased separately, or fabricated into process heating assemblies, including:

- Screw plug
- Flange
- Circulation
- Booster
- Engine Preheater
- Over-the-Side
- Vertical Loop
- Drum
- Duct

Both elements and assemblies are available from stock. They can be configured with a variety of watt and volt ratings, terminations, sheath materials and mounting options to satisfy the most demanding applications.

If our stock products do not meet your application needs, Watlow can custom engineer the optimum heater.

Performance Capabilities

- Sheath temperatures up to 1800°F (983°C)
- Assembly wattages to 2.2 megawatts
- Process assembly ratings up to 1000 psi (70 kg/cm^2)
- Watt densities up to 120 W/in^2 (18.6 W/cm^2)

Assemblies, left to right: WATROD duct, WATROD screw plug, circulation and FIREBAR flange heater. WATROD and FIREBAR elements are in front.

- Enhanced performance beyond these specifications available from Watlow Process Systems.①

Features and Benefits

- **36 standard bend formations** enable designing the heating element around available space to maximize heating efficiency.
- **FIREBAR flat surface geometry** enhances heat transfer in both immersion and air applications, and surface heating, too. Increased surface area per linear inch allows heaters to run cooler in viscous materials.
- **Wattages from 95 watts to 2.2 megawatts** (on individual elements and assemblies respectively) make tubular heaters one of the most versatile electric heating sources available.

Applications

- Liquids
- Air
- Gases
- Molten materials
- Contact surface heating
- Radiant surface heating

① Watlow Process Systems can design thermal systems to meet specific performance criteria. Contact your Watlow representative for details.

Elements and Assemblies

The following two charts will help you select an appropriate heater based on your application and watt density restrictions. These charts are application driven. The total wattage required by your application should be known before selecting a specific heater type(s) from the stock tables. If your required wattage is not known, please consult your Watlow representative.

Once the heater type has been identified, turn to the appropriate product section for information on the element or assembly.

Element and Assembly Selection Guide

To identify the tubular heater type best suited to your application, consult the *Element and Assembly Selection Guide*.

In most cases Watlow recommends using single tubular heating elements for low kilowatt applications.

Assemblies are better suited for large kilowatt applications to heat liquids, air or gases.

When selecting a heater according to watt density, be sure to consider the following:

- Liquid viscosity at start up and at process temperature
- Operating temperature
- Chemical composition

Under the "**Heating Method**" column in the *Element and Assembly Selection Guide* locate the method that applies to your application to find the recommended "Heater Type."

After identifying the heater type(s) suitable for your application, refer to the *Supplemental Applications Chart* for further application data. This chart will assist you in selecting the appropriate watt density and sheath material for your specific application. It also presents the performance characteristics for both WATROD and FIREBAR elements.

Element and Assembly Selection Guide

Application	Heating Method	Heater Type
Liquids:		
Acids	Direct immersion (circulating/non-circulating)	FIREBAR, WATROD, Screw Plug, Flange, Over-the-Side, Vertical Loop, and Pipe Insert
Caustic Soda 12% Concentrate 10% Concentrate 75% Concentrate	Direct immersion (circulating/non-circulating)	WATROD, Screw Plug, Square Flange, Flange, Over-the-Side, Vertical Loop, Circulation, and Pipe Insert
Degreasing Solutions	Direct immersion (circulating/non-circulating)	FIREBAR, WATROD, Screw Plug, Square Flange, Flange, Over-the-Side, and Pipe Insert
Electroplating	Direct immersion (circulating/non-circulating)	FIREBAR, WATROD, Screw Plug, Square Flange, Flange, Over-the-Side, Drum, Vertical Loop and Pipe Insert
Ethylene Glycol 50% Concentrate 100% Concentrate	Direct immersion (circulating/non-circulating)	FIREBAR, WATROD, Screw Plug, Flange, Over-the-Side, Circulation, Booster, and Engine Preheater
Oils Asphalt Fuel Oils Light Grades 1 & 2 Medium Grades 4 & 5 Heavy Grade 6 & Bunker C Heat Transfer Lubricating SAE 10, 20, 30 SAE 40, 50 API STD 614 Vegetable (Cooking)	Direct immersion (circulating/non-circulating)	FIREBAR, WATROD, Screw Plug, Square Flange, Flange, Over-the-Side, Drum, Vertical Loop, Circulation, Booster, and Pipe Insert
Paraffin or Wax	Direct immersion (circulating/non-circulating)	FIREBAR, WATROD, Screw Plug, Square Flange, Flange, Over-the-Side, Drum, and Pipe Insert

CONTINUED

Tubular and Process Assemblies

Elements and Assemblies

Element and Assembly Selection Guide

Application	Heating Method	Heater Type
Water Clean Deionized Demineralized Potable Process	Direct immersion (circulating/non-circulating)	FIREBAR (non-process water only) WATROD, Screw Plug, Screw Plug with Control Assembly, Square Flange, Flange, Over-the-Side, Drum, Vertical Loop, Circulation, Booster, Engine Preheater and Pipe Insert
Air:	Direct (forced or natural convection)	FIREBAR, WATROD, FINBAR, WATROD Enclosure Heater, Screw Plug, Flange, Circulation, and Duct
Gas: Hydrocarbons, Nitrogen, Oxygen Ozone, Steam	Direct (forced)	FIREBAR, WATROD, Screw Plug, Flange, and Circulation
Molten Materials:		
Aluminum	Indirect (radiant)	WATROD
Lead	Direct (non-circulating)	FIREBAR and WATROD
Salt	Direct (non-circulating)	FIREBAR and WATROD
Solder	Direct (non-circulating)	FIREBAR and WATROD
Surface Heating:		
Dies, Griddles, Molds, Platens	Direct	FIREBAR and WATROD

Supplemental Applications Chart

This *Supplemental Applications Chart* is provided in addition to the Element and *Assembly Selection Guide*. This chart will help you select watt density and sheath materials for either WATROD or FIREBAR heating elements according to the specific media being heated.

For example, if you're heating vegetable oil, either WATROD or FIREBAR elements at 30 and 40 watts per square inch respectively (4.6 and 6.2 W/cm^2) with 304 stainless steel sheath can be used.

Supplemental Applications Chart

Heated Material	Maximum Operating Temperature °F	(°C)	WATROD Element: Maximum Watt Density W/in^2	(W/cm^2)	WATROD Element: Sheath Material	FIREBAR Element: Maximum Watt Density W/in^2	(W/cm^2)	FIREBAR Element: Sheath Material
Acid Solutions (Mild)								
Acetic	180	(82)	40	(6.2)	316 Stainless Steel	40	(6.2)	Incoloy® 800
Boric (30% max.)	257	(125)	40	(6.2)	Titanium	40	(6.2)	304 Stainless Steel
Carbonic	180	(82)	40	(6.2)	Inconel® 600	40	(6.2)	304 Stainless Steel
Chromic	180	(82)	40	(6.2)	Titanium	N/A	N/A	N/A
Citric	180	(82)	23	(3.6)	Incoloy®	30	(4.6)	Incoloy® 800
Fatty Acids	150	(65)	20	(3.1)	316 Stainless Steel	30	(4.6)	Incoloy® 800
Lactic	122	(50)	10	(1.6)	316 Stainless Steel	N/A	N/A	N/A
Levulinic	180	(82)	40	(6.2)	Inconel® 600	40	(6.2)	304 Stainless Steel
Malic	122	(50)	10	(1.6)	316 Stainless Steel	16	(2.5)	Incoloy® 800
Nitric (30% max.)	167	(75)	20	(3.1)	316 Stainless Steel	30	(4.6)	Incoloy® 800
Phenol—2-4 Disulfonic	180	(82)	40	(6.2)	316 Stainless Steel	40	(6.2)	Incoloy® 800
Phosphoric	180	(82)	23	(3.6)	Incoloy®	30	(4.6)	Incoloy® 800
Phosphoric (Aerated)	180	(82)	23	(3.6)	304 Stainless Steel	30	(4.6)	304 Stainless Steel

CONTINUED

Incoloy® and Inconel® are registered trademarks of Special Metals Corporation.

Elements and Assemblies

Supplemental Applications Chart

Heated Material	Maximum Operating Temperature °F	(°C)	WATROD Element Maximum Watt Density W/in²	(W/cm²)	Sheath Material	FIREBAR Element Maximum Watt Density W/in²	(W/cm²)	Sheath Material
Proponic (10% max.)	180	(82)	40	(6.2)	Copper	40	(6.2)	304 Stainless Steel
Tannic	167/180	(75/82)	23/40	(3.6/6.2)	Steel/304 S. Steel	40	(6.2)	304 Stainless Steel
Tartaric	180	(82)	40	(6.2)	316 Stainless Steel	40	(6.2)	Incoloy® 800
Acetaldehyde	180	(82)	10	(1.6)	Copper	16	(2.4)	Incoloy® 800
Acetone	130	(54)	10	(1.6)	304 Stainless Steel	16	(2.4)	304 Stainless Steel
Air	①	①	①	①	Incoloy®	①	①	Incoloy® 800
Alcyl Alcohol	200	(93)	10	(1.6)	Copper	16	(2.4)	Incoloy® 800
Alkaline Solutions	212	(100)	40	(6.2)	Steel	48	(7.4)	304 Stainless Steel
Aluminum Acetate	122	(50)	10	(1.6)	316 Stainless Steel	16	(2.5)	Incoloy® 800
Aluminum Potassium Sulfate	212	(100)	40	(6.2)	Copper	N/A	N/A	N/A
Ammonia Gas	①	①	①	①	Steel	①	①	304 Stainless Steel
Ammonium Acetate	167	(75)	23	(3.6)	Incoloy®	30	(4.6)	Incoloy® 800
Amyl Acetate	240	(115)	23	(3.6)	Incoloy®	30	(4.6)	Incoloy® 800
Amyl Alcohol	212	(100)	20	(3.1)	304 Stainless Steel	30	(4.6)	304 Stainless Steel
Aniline	350	(176)	23	(3.6)	304 Stainless Steel	30	(4.6)	304 Stainless Steel
Asphalt	200-500	(93-260)	4-10	(0.6 - 1.6)	Steel	6-12	(0.9 - 1.8)	304 Stainless Steel
Barium Hydroxide	212	(100)	40	(6.2)	316 Stainless Steel	40	(6.2)	Incoloy® 800
Benzene, liquid	150	(65)	10	(1.6)	Copper	16	(2.5)	304 Stainless Steel
Butyl Acetate	225	(107)	10	(1.6)	316 Stainless Steel	16	(2.5)	Incoloy® 800
Calcium Bisulfate	400	(204)	20	(3.1)	316 Stainless Steel	N/A	N/A	N/A
Calcium Chloride	200	(93)	5-8	(0.8 - 1.2)	Inconel® 600	N/A	N/A	N/A
Carbon Monoxide	—	—	①	①	Incoloy®	①	①	Incoloy®
Carbon Tetrachloride	160	(71)	23	(3.6)	Incoloy®	30	(4.6)	Incoloy®
Caustic Soda:								
2%	210	(98)	48	(7.4)	Incoloy®	—	—	Consult factory
10% Concentrate	210	(98)	23	(3.6)	Incoloy®	—	—	Consult factory
75%	180	(82)	23	(3.6)	Incoloy®	—	—	Consult factory
Citric Juices	185	(85)	23	(3.6)	Incoloy®	30	(4.6)	Incoloy®
Degreasing Solution	275	(135)	23	(3.6)	Steel	30	(4.6)	304 Stainless Steel
Dextrose	212	(100)	20	(3.1)	304 Stainless Steel	30	(4.6)	304 Stainless Steel
Dyes & Pigments	212	(100)	23	(3.6)	304 Stainless Steel	30	(4.6)	304 Stainless Steel
Electroplating Baths:								
Cadmium	180	(82)	40	(6.2)	304 Stainless Steel	40	(6.2)	304 Stainless Steel
Copper	180	(82)	40	(6.2)	316 Stainless Steel	N/A	N/A	N/A
Dilute Cyanide	180	(82)	40	(6.2)	316 Stainless Steel	N/A	N/A	N/A
Rochelle Cyanide	180	(82)	40	(6.2)	316 Stainless Steel	N/A	N/A	N/A
Sodium Cyanide	180	(82)	40	(6.2)	316 Stainless Steel	N/A	N/A	N/A
Potassium Cyanide	180	(82)	40	(6.2)	316 Stainless Steel	40	(6.2)	304 Stainless Steel
Ethylene Glycol	300	(148)	30	(4.6)	Steel	40	(6.2)	304 Stainless Steel
Formaldehyde	180	(82)	10	(1.6)	304 Stainless Steel	16	(2.5)	304 Stainless Steel
Freon® Gas	300	(148)	2-5	(0.3 - 0.8)	Steel	①	①	304 Stainless Steel
Gasoline	300	(148)	23	(3.6)	Steel	30	(4.6)	304 Stainless Steel

CONTINUED

① Consult your Watlow representative.
Freon® is a registered trademark of
E.I. du Pont de Nemours and Company.

Tubular and Process Assemblies

Elements and Assemblies

Supplemental Applications Chart

Heated Material	Maximum Operating Temperature °F	(°C)	WATROD Element Maximum Watt Density W/in²	(W/cm²)	Sheath Material	FIREBAR Element Maximum Watt Density W/in²	(W/cm²)	Sheath Material
Gelatin Liquid	150	(65)	23	(3.6)	304 Stainless Steel	30	(4.6)	304 Stainless Steel
Gelatin Solid	150	(65)	5	(0.8)	304 Stainless Steel	7	(1.0)	304 Stainless Steel
Glycerin	500	(260)	10	(1.6)	Incoloy®	12	(1.9)	304 Stainless Steel
Glycerol	212	(100)	23	(3.6)	Incoloy®	30	(4.6)	304 Stainless Steel
Grease:								
Liquid	—	—	23	(3.6)	Steel	30	(4.6)	304 Stainless Steel
Solid	—	—	5	(0.8)	Steel	7	(1.0)	304 Stainless Steel
Hydrazine	212	(100)	16	(2.5)	304 Stainless Steel	20	(3.1)	304 Stainless Steel
Hydrogen	①	①	—	—	Incoloy®	①	①	Incoloy® 800
Hydrogen Chloride	①	①	—	—	Inconel® 600	①	①	N/A
Hydrogen Sulfide	①	①	—	—	316 Stainless Steel (heavy wall)	①	①	N/A
Magnesium Chloride	212	(100)	40	(6.2)	Inconel® 600	40	(6.2)	Incoloy® 800
Magnesium Sulfate	212	(100)	40	(6.2)	304 Stainless Steel	40	(6.2)	304 Stainless Steel
Magnesium Sulfate	212	(100)	40	(6.2)	316 Stainless Steel	40	(6.2)	304 Stainless Steel
Methanol Gas	①	①	—	—	304 Stainless Steel	①	①	304 Stainless Steel
Methylamine	180	(82)	20	(3.1)	Inconel® 600	30	(4.6)	304 Stainless Steel
Methychloride	180	(82)	20	(3.1)	Copper	N/A	N/A	N/A
Molasses	100	(37)	4-5	(0.6 - 0.8)	304 Stainless Steel	5-8	(0.8 - 1.2)	304 Stainless Steel
Molten Salt Bath	800-900	(426-482)	25-30	(3.8 - 4.6)	Monel®	N/A	N/A	N/A
Naphtha	212	(100)	10	(1.6)	Steel	16	(2.5)	304 Stainless Steel
Oils								
Fuel Oils:								
Grades 1 & 2 (distillate)	200	(93)	23	(3.6)	Steel	30	(4.6)	304 Stainless Steel
Grades 4 & 5 (residual)	200	(93)	13	(2.0)	Steel	16	(2.5)	304 Stainless Steel
Grades 6 & Bunker C (residual)	160	(71)	8	(1.2)	Steel	10	(1.6)	304 Stainless Steel
Heat Transfer Oils: ②								
Static	500	(260)	16	(2.5)	Steel	23	(3.6)	304 Stainless Steel
	600	(315)	10	(1.6)	Steel	16	(2.5)	304 Stainless Steel
Circulating	500	(260)	23	(3.6)	Steel	30	(4.6)	304 Stainless Steel
	600	(315)	15	(2.3)	Steel	20	(3.1)	304 Stainless Steel
Lubrication Oils:								
SAE 10, 90-100 SSU @ 130°F	250	(121)	23	(3.6)	Steel	30	(4.6)	304 Stainless Steel
SAE 20, 120-185 SSU @ 130°F	250	(121)	23	(3.6)	Steel	30	(4.6)	304 Stainless Steel
SAE 30, 185-255 SSU @ 130°F	250	(121)	23	(3.6)	Steel	30	(4.6)	304 Stainless Steel
SAE 40, -80 SSU @ 210°F	250	(121)	13	(2.0)	Steel	18	(2.7)	304 Stainless Steel
SAE 50, 80-105 SSU @ 210°F	250	(121)	13	(2.0)	Steel	18	(2.7)	304 Stainless Steel
Miscellaneous Oils:								
Draw Bath	600	(315)	23	(3.6)	Steel	30	(4.6)	304 Stainless Steel
Hydraulic	—	—	15③	(2.3)	Steel	15③	(2.3)	304 Stainless Steel
Linseed	150	(65)	50	(7.7)	Steel	60	(9.3)	304 Stainless Steel
Mineral	200	(93)	23	(3.6)	Steel	30	(4.6)	304 Stainless Steel
	400	(204)	16	(2.5)	Steel	23	(3.6)	304 Stainless Steel
Vegetable/Shortening	400	(204)	30	(4.6)	304 Stainless Steel	40	(6.2)	304 Stainless Steel

CONTINUED

② Maximum operating temperatures and watt densities are detailed in Heat Transfer Oil charts on page 265.
③ Per API standards.
Monel® is a registered trademark of Special Metals Corporation.

Elements and Assemblies

Supplemental Applications Chart

Heated Material	Maximum Operating Temperature °F	(°C)	WATROD Element Maximum Watt Density W/in²	(W/cm²)	WATROD Element Sheath Material	FIREBAR Element Maximum Watt Density W/in²	(W/cm²)	FIREBAR Element Sheath Material
Paraffin or Wax (liquid)	150	(65)	16	(2.4)	Steel	20	(3.1)	304 Stainless Steel
Perchloroethylene	200	(93)	23	(3.6)	Steel	30	(4.6)	304 Stainless Steel
Potassium Chlorate	212	(100)	40	(6.2)	316 Stainless Steel	N/A	N/A	N/A
Potassium Chloride	212	(100)	40	(6.2)	316 Stainless Steel	N/A	N/A	N/A
Potassium Hydroxide	160	(71)	23	(3.6)	Monel®	N/A	N/A	N/A
Soap, liquid	212	(100)	20	(3.1)	304 Stainless Steel	30	(4.6)	304 Stainless Steel
Sodium Acetate	212	(100)	40	(6.2)	Steel	50	(7.7)	304 Stainless Steel
Sodium Cyanide	140	(60)	40	(6.2)	Incoloy®	50	(7.7)	Incoloy® 800
Sodium Hydride	720	(382)	28	(4.3)	Incoloy®	36	(5.5)	Incoloy® 800
Sodium Hydroxide	—	—	—	—	See Caustic Soda	—	—	—
Sodium Phosphate	212	(100)	40	(6.2)	Copper	50	(7.7)	304 Stainless Steel
Steam, flowing	300	(148)	10	(1.6)	Incoloy®	①	①	Incoloy® 800
	500	(260)	5-10	(0.8-1.6)	Incoloy®	①	①	Incoloy® 800
	700	(371)	5	(0.8)	Incoloy®	①	①	Incoloy® 800
Sulfur, Molten	600	(315)	10	(1.6)	Incoloy®	12	(1.8)	Incoloy® 800
Toluene	212	(100)	23	(3.6)	Steel	30	(4.6)	304 Stainless Steel
Trichlorethylene	150	(65)	23	(3.6)	Steel	30	(4.6)	304 Stainless Steel
Turpentine	300	(148)	20	(3.1)	304 Stainless Steel	25	(3.8)	304 Stainless Steel
Water								
Clean	212	(100)	60	(9.3)	Incoloy®	45	(7)	Incoloy® 800
Deionized	212	(100)	60	(9.3)	316 SS (passivated)	90	(14)	Incoloy® 800
Demineralized	212	(100)	60	(9.3)	316 SS (passivated)	90	(14)	Incoloy® 800
Potable	212	(100)	60	(9.3)	Incoloy®	45	(7)	Incoloy® 800
Process	212	(100)	48	(9.3)	Incoloy®			Consult factory

① Consult your Watlow representative.

Free Cross Sectional Area of WATROD and FIREBAR Circulation Heaters

Free cross sectional areas from the chart are in square feet.
Calculations are based on:

- Flange 12 inches and under, pipes are schedule 40
- Flanges 14 inches and above, pipes are standard wall thickness (0.375 inch/9.5 mm)
- All WATROD heating elements are 0.475 inch diameter (12 mm)

Circulation Heater Size Inches	Free Cross Sectional Area in Square Feet (Number of Elements in Parenthesis)					
WATROD						
2½ NPT	0.044	(3)				
3 Flange	0.044	(3)	0.037	(6)		
4 Flange	0.074	(6)				
5 Flange	0.124	(6)	0.117	(9)		
6 Flange	0.172	(12)	0.164	(15)		
8 Flange	0.303	(18)	0.296	(21)	0.288	(24)
10 Flange	0.481	(27)	0.460	(36)		
12 Flange	0.697	(36)	0.652	(54)		
14 Flange	0.848	(45)	0.781	(72)		
16 Flange	1.091	(72)	1.054	(87)	1.017	(102)
18 Flange	1.372	(102)	1.357	(108)	1.342	(114)
20 Flange	1.748	(108)	1.733	(114)	1.704	(126)
FIREBAR						
2½ NPT	0.0417	(3)				
4 Flange	0.0692	(6)				
6 Flange	0.154	(15)				

Tubular and Process Assemblies

Elements and Assemblies

Heat Transfer Oil Chart

Heat Transfer Fluid	Recommended Maximum Temperature °F (°C)				Flammability Data °F (°C)						Minimum Velocity Thru Heater in Feet/second at W/in² (M/second at W/cm²)							
	Process		Sheath		Flash Point		Fire Point		Autoignition		8	(1.2)	16	(2.8)	23	(3.6)	30	(4.7)
	F	(˚C)	˚F	(˚C)	˚F	(˚C)	˚F	(˚C)	˚F	(˚C)	W/in²	(W/cm²)	W/in²	(W/cm²)	W/in²	(W/cm²)	W/in²	(W/cm²)
Calflo HTF	600	(316)	650	(343)	414	(212)	462	(239)	670	(354)	1.5	(0.5)	3	(0.9)	5	(1.52)	7	(2.1)
Calflo AF	550	(288)	600	(316)	400	(204)	437	(225)	650	(343)	1.5	(0.5)	3	(0.9)	5	(1.52)	7	(2.1)
Caloria HT-43	600	(316)	680	(360)	400	(204)	no data	no data	670	(354)	1.5	(0.5)	2.5	(0.75)	3	(0.9)	4	(1.22)
Dow therm® A	750	(399)	835	(446)	255	(124)	275	(135)	1150	(621)	0.5	(0.15)	1	(0.3)	2	(0.61)	3	(0.9)
Dow therm® G	700	(371)	775	(413)	305	(152)	315	(157)	1150	(621)	0.7	(0.2)	1.5	(0.5)	2.5	(0.75)	3.5	(1.1)
Dow therm® J	575	(302)	650	(343)	145	(63)	155	(68)	806	(430)	1	(0.3)	2	(0.61)	3	(0.9)	4.5	(1.37)
Dow therm® LF	600	(316)	675	(357)	260	(127)	280	(138)	1020	(549)	0.7	(0.2)	1.5	(0.5)	2.5	(1.75)	3.5	(1.1)
Dow therm® HT	650	(343)	700	(371)	no data	no data	no data	no data	no data	no data	1.5	(0.5)	2.5	(0.75)	3.5	(1.1)	5	(1.52)
Dow therm® Q	625	(329)	700	(371)	no data	no data	no data	no data	773	(412)	0.7	(0.2)	1.5	(0.5)	2.5	(0.75)	3.5	(1.1)
Marlotherm S	662	(350)	698	(370)	374	(190)	no data	no data	932	(500)	1.5	(0.5)	3	(0.9)	5	(1.52)	7	(2.1)
Mobiltherm 603	590	(310)	625	(329)	380	(193)	no data	no data	no data	no data	1.5	(0.5)	3	(0.9)	5	(1.52)	7	(2.1)
Multitherm IG-2	600	(316)	650	(343)	440	(227)	500	(260)	700	(371)	0.8	(0.24)	1.7	(0.52)	2.3	(0.7)	3	(0.9)
Multitherm PG-1	600	(316)	640	(338)	340	(171)	385	(196)	690	(368)	1	(0.3)	2	(0.61)	3	(0.9)	4	(1.22)
Para Cymene	600	(316)	650	(343)	117	(47)	152	(72)	817	(438)	0.7	(0.2)	1.5	(0.5)	2.5	(0.75)	3.5	(1.1)
Syltherm 800	750	(399)	800	(427)	350	(177)	380	(193)	725	(385)	1.5	(0.5)	3	(0.9)	5	(1.52)	7	(2.1)
Syltherm XLT	500	(260)	550	(288)	116	(47)	130	(54)	662	(350)	1.5	(0.5)	2.5	(0.75)	4	(1.22)	5	(1.52)
Texatherm	600	(316)	640	(338)	430	(221)	no data	no data	no data	no data	2	(0.61)	4	(1.22)	6	(1.83)	8	(2.4)
Thermia 33	600	(316)	650	(343)	455	(235)	495	(257)	no data	no data	1.5	(0.5)	3	(0.9)	5	(1.52)	7	(2.1)
Therminol 44	400	(204)	475	(246)	405	(207)	438	(228)	705	(374)	1	(0.3)	2	(0.61)	3	(0.9)	4	(1.22)
Therminol 55	550	(288)	605	(318)	350	(177)	410	(210)	675	(357)	1.5	(0.5)	2.5	(0.75)	3.5	(1.1)	5	(1.52)
Therminol 59	600	(316)	650	(343)	302	(150)	335	(168)	770	(410)	1.5	(0.5)	2.5	(0.75)	3.5	(1.1)	5	(1.52)
Therminol 60	620	(327)	655	(346)	310	(154)	320	(160)	835	(448)	1.5	(0.5)	3	(0.9)	5	(1.52)	7	(2.1)
Therminol 68	650	(343)	705	(374)	350	(177)	380	(183)	705	(374)	1.5	(0.5)	2.5	(0.75)	3	(0.9)	4.5	(1.37)
Therminol 75	750	(399)	805	(429)	390	(199)	440	(227)	1000	(538)	1	(0.3)	2	(0.61)	3	(0.9)	4	(1.22)
Therminol LT	600	(316)	650	(343)	134	(57)	150	(66)	805	(429)	1.5	(0.5)	2.5	(0.75)	4	(1.22)	5	(1.52)
Therminol VP-1	750	(399)	800	(427)	255	(124)	280	(127)	1150	(621)	1	(0.3)	2	(0.61)	3	(0.9)	4	(1.22)
U-Con 500	500	(260)	550	(288)	540	(282)	600	(316)	750	(399)	1	(0.3)	2	(0.61)	3	(0.9)	4	(1.22)

Dow therm® is a registered trademark of Dow Chemical Corporation.

Tubular and Process Assemblies

Elements and Assemblies

Agency Recognition

UL® and CSA recognition information charts are provided to ensure:

- Safety parameters in relationship to stated voltage and amperage
- Approved sheath materials, end seals and assembly electrical enclosures

Watlow believes that UL® and CSA recognition information is necessary to confirm the reliability of our heating products in relationship to your application. As such, the accompanying Agency Recognition charts illustrate the extent of coverage each heater type provides. Specific end use application information is required for each agency marking. Some products carry U.S. and Canada approvals.

UL® Recognition and Listing

File Number E52951 (UL® 499) — Component Recognition
All information for UL® file #E52951 can be found under "Heaters Miscellaneous" (Classification KSOT2).

Elements

WATROD Diameter mm	(inch)	Code Number Designation		Max. Volts	Max Amps	Max. Watt Density W/cm²	W/in²	Min. Bend Radius mm	(inch)	Allowable Sheath Materials	End Seal Types
6.0	(0.210)	**RK** series	**U0-xx**	250	15	N/A	N/A	2	(1/16)	Aluminum	
6.6	(0.260)	**RA** series	**U1-xx**	250	15	N/A	N/A	2	(1/16)	Copper	Epoxy resin
8.0	(0.315)	**RB** series	**U3-xx**	480	30	N/A	N/A	2	(1/16)	Nickel alloy	Lavacone
8.5	(0.335)		**UE-xx**	480	30	N/A	N/A	5	(3/16)	Inconel®	Silicone resin
9.5	(0.375)	**RD**, **RS** series	**U5-xx**	480	30	N/A	N/A	5	(3/16)	Stainless steel	Silicone rubber
10.9	(0.430)	**RC** series	**U6-xx**	600	40	N/A	N/A	4	(5/32)	Steel	ULTRAGARD
12.0	(0.475)	**RG** series	**U7-xx**	600	40	N/A	N/A	5	(3/16)	Titanium	SF 99
12.4	(0.490)	**RJ** series	**U8-xx**	600	40	N/A	N/A	5	(3/16)	Hastelloy®	
15.9	(0.625)	**RF** series	**U9-xx**	600	40	N/A	N/A	11	(7/16)	Copper-coated steel	

FIREBAR® Height mm	(inch)	Code Number Designation		Max. Volts	Max. Amps	Max. Watt Density W/cm²	(W/in²)	Min. Bend Radius Major Axis mm	(inch)	Minor Axis mm	(inch)	Allowable Sheath Materials	End Seal Types
Air or Immersion Heating													
16	(5/8)	**FA, FS** series	**A-xx**	250	N/A	7.7	(50)	25	(1)	13	(1/2)	Nickel alloy	Epoxy resin
25.4	(1)	**FB, FS** series		250	N/A	7.7	(50)	25	(1)	13	(1/2)	Stainless steel	Lavacone
												Titanium	Silicone resin
													Silicone rubber
													ULTRAGARD
Liquid Immersion Heating Only													
16	(5/8)	**FA, FS** series	**U-xx**	480	N/A	24.7	(160)	25	(1)	2	(1/16)	Nickel alloy	Epoxy resin
25.4	(1)	**FB, FS** series		480	N/A	24.7	(160)	25	(1)	2	(1/16)	Stainless steel	Lavacone
												Titanium	Silicone resin
													Silicone rubber
													ULTRAGARD

Note: UL® and CSA must be requested at the time the order is placed.

UL® is a registered trademark of the Underwriter's Laboratories, Inc.
Hastelloy® is a registered trademark of Haynes International.

Tubular and Process Assemblies

Elements and Assemblies

Assemblies

Refer to applicable WATROD and FIREBAR elements for maximum voltage, watt density and sheath materials.

Heater Type	Code Number Designations	Electrical Enclosure Options
Screw Plug	All catalog "**B**" models Series **U1** to **U9**	General purpose without thermostat
Flange	All catalog models **FE**, **FG**, **FH**, **FK**, **FL**, **FM**, **FN**, **FO**, **FP** **FR**, **FS**, **FT**, **FW**—Series **U1** to **U9, U0 and UE**	General purpose without thermostat *Moisture resistant
Circulation	All catalog models **CB**, **CF**, **CP** Series **U1** to **U9**	General purpose without thermostat *Moisture resistant
Over-the-Side	All catalog "**OL**," "**OR**" and "**VL**" models Series **U1** to **U9**, *except* **U2** and **U4**	Moisture resistant without thermostat
Duct	All catalog "**D6** to **D125**" models Series **U1** to **U9**, **U0 and UE**	General purpose enclosure only (Incoloy® sheath only)

* 4, 5, 6 and 8 inch flange size only

File Number E56488 (UL® 1030)—Water Immersion Only (Classification UBJY2). — Component Recognition

Elements

WATROD Diameter mm	(inch)	Code Number Designation	Max. Volts	Max Amps	Max. Watt Density W/cm²	(W/in²)	Min. Bend Radius mm	(inch)	Allowable Sheath Materials	End Seal Types
8.0	(0.315)		480	7	18.5	(120)	3	(⅛)		
9.5	(0.315)		480	7	18.5	(120)	3	(⅛)	Copper	Epoxy
10.9	(0.430)	**T** series	575	7	18.5	(120)	8	(5⁄16)	Incoloy®	RTV
12.0	(0.475)	Example: **T085CN3S**	575	7	18.5	(120)	8	(5⁄16)	Stainless steel	Silicone
12.4	(0.490)		575	7	18.5	(120)	8	(5⁄16)		
15.9	(0.625)		575	7	18.5	(120)	8	(5⁄16)		

FIREBAR® Height mm	(inch)	Code Number Designation	Max. Volts	Max. Amps	Max. Watt Density W/cm²	(W/in²)	Min. Bend Major Axis mm	(inch)	Min. Bend Minor Axis mm	(inch)	Allowable Sheath Materials	End Seal Types
25.4	(1)	**T** series Example: **T085HN3W**	250	N/A	12.4	(80)	25	(1)	4	(5⁄32)	Incoloy® Stainless steel	Epoxy RTV Silicone

Assemblies

Refer to applicable WATROD and FIREBAR elements for maximum voltage, watt density and sheath materials.

Heater Type	Code Number Designations	Electrical Enclosure Options
Screw Plug	Models **T3**, **T5**, **T6**, **T7**, **T8**, **T9** Example: **T336xxxx**	General purpose without thermostat
Flange	Models **T3**, **T5**, **T6**, **T7**, **T8**, **T9** Example: **T621xxxx**	General purpose without thermostat

Note: UL® and CSA must be requested at the time the order is placed.

Elements and Assemblies

Allowed UL® MULTICOIL Configurations, File #E52951

Part Description	Phase	Sheath Diameter mm	(inch)	Max. Sheath Temperature °C	(°F)	Min. Bend Radius mm	(inch)	Max. Volts
U 6 M 1	1	10.92	(0.43)	692	(1278)	12.7	(0.50)	480
U 6 M 1 T	1	10.92	(0.43)	692	(1278)	12.7	(0.50)	480
U 7 M 1	1	12.065	(0.475)	612	(1134)	15.88	(0.625)	480
U 7 M 1 T	1	12.065	(0.475)	612	(1134)	15.88	(0.625)	480
U 7 M 2	1	12.065	(0.475)	612	(1134)	15.88	(0.625)	480
U 7 M 2 T	1	12.065	(0.475)	612	(1134)	15.88	(0.625)	480
U 7 M 3	3	12.065	(0.475)	802	(1477)	15.88	(0.625)	480
U 8 M 1	1	12.446	(0.49)	612	(1134)	15.88	(0.625)	480
U 8 M 1 T	1	12.446	(0.49)	612	(1134)	15.88	(0.625)	480
U 8 M 2	1	12.446	(0.49)	612	(1134)	15.88	(0.625)	480
U 8 M 2 T	1	12.446	(0.49)	612	(1134)	15.88	(0.625)	480
U 8 M 3	3	12.446	(0.49)	802	(1477)	15.88	(0.625)	480
U 9 M 1	1	15.875	(0.625)	612	(1134)	19.05	(0.75)	480
U 9 M 1 T	1	15.875	(0.625)	612	(1134)	19.05	(0.75)	480
U 9 M 2	1	15.875	(0.625)	612	(1134)	19.05	(0.75)	480
U 9 M 2 T	1	15.875	(0.625)	612	(1134)	19.05	(0.75)	480
U 9 M 3	3	15.875	(0.625)	802	(1477)	19.05	(0.75)	480

Allowable Sheaths: Nickel alloy 800, 840

Allowable Seals: Lavacone, RTV, Epoxy, ULTRAGARD, Silicone Resin

Allowable Terminations: Lead wire only

Tubular and Process Assemblies

Elements and Assemblies

CSA Certification

File Number LR 31388

All information for CSA file LR 31388 can be found in the CSA *List of Certified Electrical Equipment* catalog, Volume II, under Heaters—Miscellaneous.

Elements

Heater Type— Diameter/Height mm	(inch)	Code Number Designation	Max. Volts	Max. Watt Density W/cm²	(W/in²)	Allowable Sheath Materials①	End Seal Type (All Diameters)
WATROD:							
6.6	(0.260)	**RA, 1-xx**	250	18.5	(120)	Copper	
8.0	(0.315)	**RB, 3-xx**	250	18.5	(120)	Nickel alloy	Epoxy resin,
9.5	(0.375)	**5-xx**	250	18.5	(120)	Stainless steel	Lavacone,
10.9	(0.430)	**RC, 6-xx**	600	18.5	(120)	Steel	Silicone resin,
12.0	(0.475)	**RG, 7-xx**	600	18.5	(120)	Titanium	Silicone rubber
12.4	(0.490)	**8-xx**	600	18.5	(120)		ULTRAGARD
15.9	(0.625)	**9-xx**	600	18.5	(120)		
FIREBAR:							
⅝	(15.9)	**FA**, **FS** models, **4-xx**	480	18.5	(120)	Nickel alloy	Epoxy resin,
1	(25.4)	**FB**, **FS** models, **2-xx**	480	18.5	(120)	Stainless steel	Lavacone,
						Titanium	Silicone resin,
							Silicone rubber

Note: Heating elements are certified only for use in equipment where the acceptability of the construction combination is determined by the Canadian Standards Association.
① Some sheath materials not available on all diameters. Consult factory.

Assemblies - File LR31388

Heater Type	Code Number Designations	Electrical Enclosure Options
Screw Plug	All catalog models **BA, BC, BD, BE, BG, BH, BL** Series **1-xx** to **9-xx**	General purpose with or without thermostat Enclosure 4 with or without thermostat
Flange	All catalog models **FM**, **FN**, **FO**, **FP**, **FR**, **FS**, **FT**, **FW** Series **1-xx** to **9-xx**	General purpose with or without thermostat ***Enclosure 4 with or without thermostat**
Circulation	All catalog models **CBD**, **CBE**, **CBL**, **CFM**, **CFN**, **CFO**, **CFP**, **CFR**, **CFS**, **CFT**, **CFW**—Series **1-10** to **9-10**	General purpose with or without thermostat ***Enclosure 4 with or without thermostat**
Over-the-Side	All catalog "**OL**" and "**OR**" models Series **1-30** to **9-30**	Enclosure 4 with or without thermostat
Duct	All catalog "**D**" and "**MDH**" models Series **1-1** to **9-1**	General purpose enclosure only

* 4, 5, 6 and 8 inch flange size only.

File Number LR 61707—Heater Assemblies–Miscellaneous–For Hazardous Locations

Heater Type	Code Number Designations	Electrical Enclosure Options
Screw Plug	All catalog models **BA, BC, BD, BE, BG, BH, BL** Series **1-xx** to **9-xx**	Class I, Groups B, C and D Enclosure 4 with or without thermostat
Flange	All catalog models **FM**, **FN**, **FO**, **FP**, **FR**, **FS**, **FT**, **FW** Series **1-xx** to **9-xx**	Class I, Groups B, C and D and Enclosure 4 with or without thermostat
Circulation	All catalog models **CFM**, **CFN**, **CFO**, **CFP**, **CFR**, **CFS**, **CFT**, **CFW** Series **1-10** to **9-10**	Class I, Groups B, C and D and Enclosure 4 with or without thermostat

Note: UL® and CSA must be requested at the time the order is placed.

Tubular and Process Assemblies

Elements and Assemblies

Tubular and Process Assemblies

WATROD Heating Elements

Single- and Double-Ended Elements

Available in single- or double-ended termination styles, the versatile and economical WATROD tubular heating element lends itself to virtually the entire range of immersion and air heating applications.

The single-ended WATROD tubular design has both terminals at one end. The opposite end is sealed. Standard 12-inch (305 mm) flexible lead wires are crimp connected to the terminal pin and have silicone-impregnated fiberglass oversleeves.

The double-ended WATROD, with its round cross-sectional geometry, is highly adaptable for bending—especially when bending is performed in the field.

Watlow's new double-sided multicoil tubular elements offer various combinations of resistor coils and thermocouples inside one sheath. They have the ability to sense the heater's internal temperature accurately every time, or offer three-phase capability in one element.

Both single- and double-ended WATRODs share many construction features that deliver long life—the resistance wire is centered in the heater sheath and electrically insulated with compacted, high-grade magnesium oxide for superior heating performance.

WATROD heating elements have a variety of mounting and termination options that make them highly popular among industrial customers.

Single-Ended WATROD Performance Capabilities

- Watt densities to 45 W/in^2 (6.9 W/cm^2)
- UL® and CSA component recognition to 240V~(ac)
- Incoloy® and stainless steel sheath temperatures to 1200°F (650°C)

Double-Ended WATROD Performance Capabilities

- Watt densities up to 120 W/in^2 (18.6 W/cm^2)

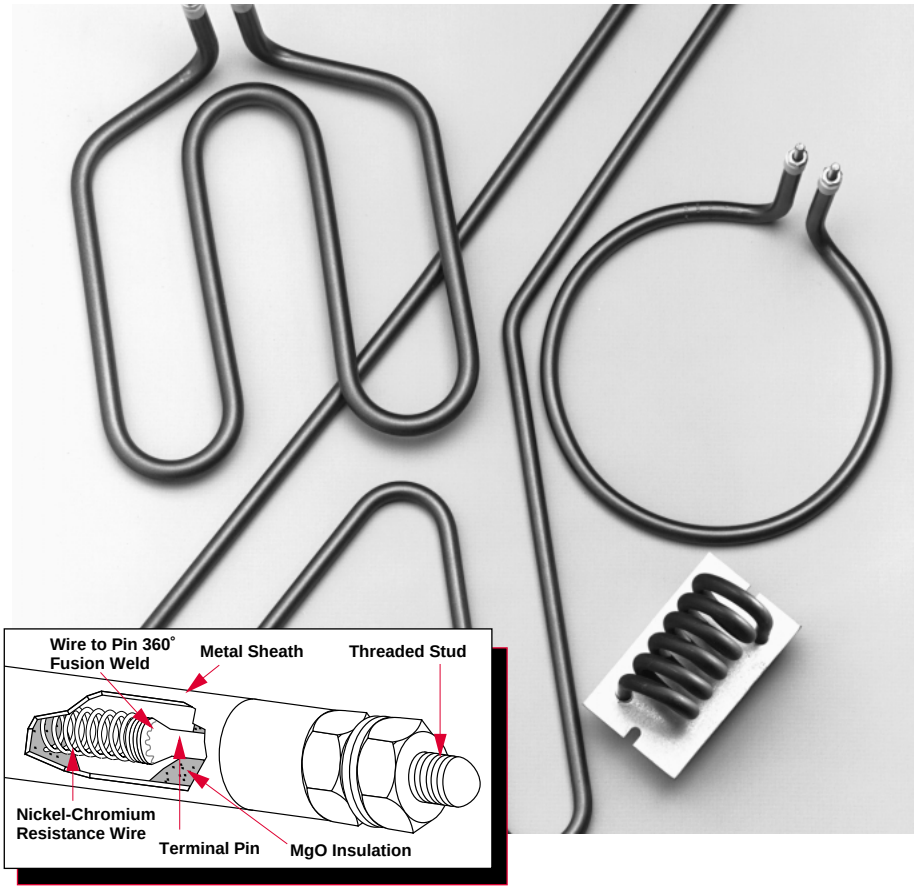

- UL® and CSA component recognition to 480 and 600V~(ac) respectively
- Inconel® sheath temperatures to 1800°F (982°C)
- Incoloy® sheath temperatures to 1600°F (870°C)
- Stainless steel sheath temperatures to 1200°F (650°C)
- Steel sheath temperatures to 750°F (400°C)
- Copper sheath temperatures to 350°F (175°C)
- Inconel® 600 sheath temperatures to 1800°F (982°C)

Features and Benefits

- **Precision wound nickel-chromium resistance wire** distributes heat evenly to the sheath for optimum heater performance.
- **Silicone resin seals** protect against moisture contamination and are rated to 390°F (200°C).
- **MgO insulation filled sheath** maximizes dielectric strength, heat transfer and life.
- **Standard sheath materials include**: copper, steel, 316 stainless steel and Incoloy®. Optional materials, available on made-to-order, include 304 stainless steel, Inconel® Monel® and titanium.
- **36 standard bend formations** allow forming the heating element to the application. Spirals, compound bends and multi-axis and multi-plane configurations.
- **Resistance wire fusion welded to the terminal pin** for a stronger, positive electrical connection.
- **Stainless steel studs** are fusion welded to terminal pins for mechanical strength with ceramic insulators.
- **Popular termination, mounting and moisture seal options available.**

WATROD Heating Elements

High Temperature Tubular Double-Ended Elements

Watlow manufactures high temperature tubular heaters to bridge the gap between standard tubular heaters and Watlow multicell heaters. This new tubular is well suited for process air heating applications in excess of 1300˚F (704˚C), resulting in a maximum sheath temperature of 1800˚F (983˚C). Controlled lab testing between the new design and current tubular designs show an increase in life of approximately 50 percent.

The high temperature tubular consists of an engineered tubing with an outer sheath of Inconel® 600 and a special internal construction. The outer sheath offers high temperature capabilities, reduced oxidation, as well as corrosion resistance.

The new tubular offering is available in 0.430 and 0.375 inch diameters that are configurable either as formed tubulars or process heaters. The heaters can also be welded to flanges and plates for mounting purposes. Maximum sheath length available is 275 inches for the 0.430 inch and 0.375 inch diameters. The factory should be contacted for longer sheath lengths.

Features and Benefits

- **Inconel® 600 sheath material and a special internal construction** assures high temperature performance and corrosion protection in tough applications.
- **0.375 in and 0.430 in diameters** allow heater to be configured to existing tubular designs that may be experiencing short life.
- **Dual-ended termination** can be installed into flanges and screw plugs similarly to standard product configurations.
- **Bendable in standard formations** makes the heater easy to apply in a wide variety of applications.

Applications

- High temperature ovens and furnaces
- Radiant heating
- Drying
- Environmental—VOC abatement
- Process air heating: duct heaters, circulation heaters
- Vacuum applications
- Flue gas cleaning (desulphurization)
- Fluidized beds

Sheath Temperature Versus Oven Temperature at Various Watt Density

This chart is used to verify the correct watt density for an oven application assuming no air flow. To use the chart, first select the oven process temperature on the X axis, using the chosen watt density read the sheath temperature rise above oven temperature from the Y axis. This number should then be added to oven temperature. If this number is greater than 1800˚F (982°C), a lower watt density should be chosen.

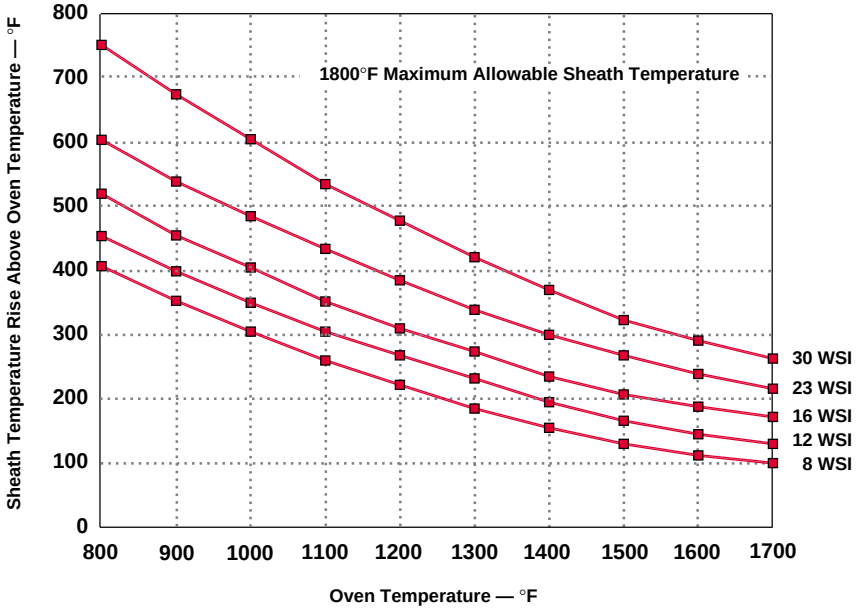

Tubular and Process Assemblies

WATROD Heating Elements

High Temperature Tubular Double-Ended Elements

Continued

Heater Life Estimate Service

High Temperature Heater Comparisons

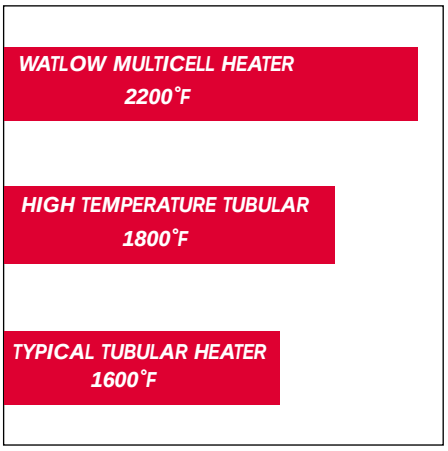

*Assuming normal design practices.

Watlow now provides an industry first service with the offering of the high temperature tubular. By providing operating parameters Watlow can provide customers with the estimated life of the heater. To get this information the following information should be provided:

- Heater voltage
- Heater wattage
- Heater diameter (0.430 in or 0.375 in)
- Heated length
- Bend configuration and dimensions (# of bends and radius)
- Application including process temperature
- Power switching device and cycle time (SCR, etc.)

F.O.B.: Hannibal, Missouri

How to Order

To order please specify:

- Volts
- Watts
- Heater diameter (0.430 in or 0.375 in)
- Termination type or style (studs, lead wire)
- Heated length
- Cold end length
- Overall sheath length
- Formation
- Mounting option (bulkheads, brackets, etc.)

WATROD Heating Elements

Multicoil Single- or Double-Ended Elements

Watlow's new tubular element with multiple coils and/or thermocouples inside one sheath answers the need for a versatile, innovative tubular heater. Our new, patent-pending method of packaging a thermocouple inside of a heater with one or more resistance coils, gives the ability to sense a heaters' internal temperature accurately, every time.

Moreover, this is the first tubular heater in the industry with three-phase capability. The three coil, three-phase heater will offer a lower amperage solution while delivering the full power required in a compact heater package.

Previously three separate heaters would have been required to do the same job; therefore Watlow's new multicoil heater capabilities save money.

Watlow has the capability to put up to two coils in a 0.375 or 0.430 diameter heater and up to three coils in a 0.475 or 0.490 diameter heater. Any one or more of these coils can be a resistance wire or a thermocouple. The bending formations are virtually limitless; while mounting options are similar to other Watlow tubular heaters. The three-phase multicoil heaters can be single ended with three leads for three-phase wye hook up. Watlow recommends using an epoxy moisture seal or silicone-based seal.

Watlow's multicoil heaters are available in all standard materials such as Incoloy®, 304 and 316 stainless steel, and can be formed into almost any configuration. Our five thermocouple and/or coil options for multicoil tubular configurations will meet most requirements; however, we are always interested in discussing the use of different materials or changing the number of coils and thermocouples.

Features and Benefits

- **Three-phase capability** results in one element versus three, lower amperage, reduced installation time and lower overall cost.
- **Internal thermocouple** allows responsive and accurate, internal, high-limit sensing and reduced assembly costs.
- **Single ended** allows for mounting in a ½ inch NPT or ¾ inch NPT fitting with three-phase capability.
- **Multiple coil options** reduce inventory by allowing dual voltage capability.
- **Versatile forming capabilities** can be formed into virtually any configuration.
- **Internal construction** allows space savings because drilling and tapping of flange is unnecessary; plus, the interior thermocouple eliminates contamination buildup around the external sensing tip, reducing the possibility of false readings.

Applications

- Foodservice
- Process
- Medical
- Milled groove
- Plastics
- Plating
- Oven heating
- Semiconductor

Tubular and Process Assemblies

WATROD Heating Elements

Multicoil Single- or Double-Ended Elements

Continued

Options

Option A

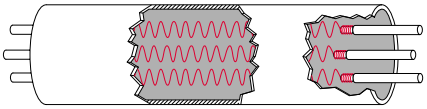

3-phase tubular, 0.475 and 0.490 inch diameter.

Option B

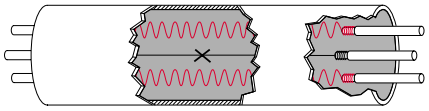

1-phase tubular with two resistance wires and one thermocouple, 0.475 and 0.490 inch diameter.

Option C

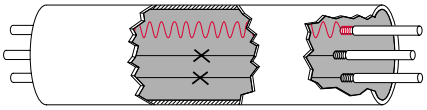

1-phase tubular with one resistance wire and two thermocouples, 0.475 and 0.490 inch diameter.

Option D

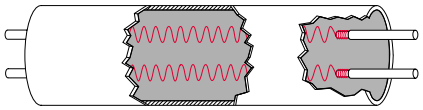

1-phase tubular with three different one phase circuits, 0.475 and 0.490 inch diameter.

Option E

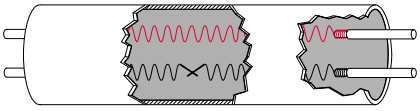

1-phase tubular with two resistance coils, 0.375, 0.430, 0.475 and 0.490 inch diameter.

Option F

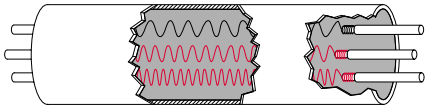

1-phase tubular with one resistance coil and one thermocouple, 0.375, 0.430, 0.475 and 0.490 inch diameter.

Specifications

Termination style is currently limited to lead wires 392°F (200˚C) Sil-A-Blend™ or 482°F (250˚C) GGS.

Moisture seals are required, options include:

- Standard epoxy with temperature rating to 266˚F (130°C). Typical applications include water/oil immersion.
- Lavacone with temperature rating to 300˚F (148.9°C). Typical application includes air heating.
- High-temp ceramic rated to 2800˚F (1537.8°C).
- Consult factory for other moisture seal options.
- ULTRAGARD with temperature rating to 700˚F (375˚C).

Mounting options include:

- Mounting brackets
- Locator washers
- Mounting collars
- Water-tight bulkheads

Maximum trim length is 237 inches (6020 mm). Heater designs with trim length greater than 120 inches (3048 mm) must be reviewed with factory.

Sheath materials: Incoloy®, 304 and 316 stainless steel, consult factory for other sheath material options.

Internal thermocouple options: Type K is used, consult factory for Type J thermocouple options.

U.S. Patent Pending

Sil-A-Blend™ is a trademark of Radix Wire Company.

WATROD Heating Elements

Specifications

	Double-Ended				Single-Ended			
	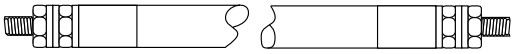							
Applications	Direct immersion Hot runner mold (manifold) Forced air Ovens Radiant Clamp-on		Vacuums Semiconductor		Platens Forced air Deicing antennas Plastic wrap cutting Seal bars			
Watt Density W/in² (W/cm²)	Stock: Made-to-Order (M-t-O):		up to 60 up to 120	(9.3) (18.6)	Stock: M-t-O:		up to 20 up to 45	(3.1) (6.9)
Element Diameters inch (mm) **and Surface Area per Linear** inch (cm) Diameter Tolerance ± 0.005 inch (0.13 mm)	**Dia.**	**in²**	**Dia. (mm)**	**cm²**	**Dia.**	**in²**	**Dia. (mm)**	**cm²**
	0.210	0.660	(5.3)	(4.26)	0.375	1.178	(9.5)	(7.600)
	0.260	0.817	(6.6)	(5.27)	0.430	1.351	(10.9)	(8.717)
	0.315	0.990	(8.0)	(6.38)	0.475	1.492	(12.0)	(9.626)
	0.332	1.043	(8.4)	(6.73)	0.490	1.539	(12.4)	(9.930)
	0.375	1.178	(9.5)	(7.60)	0.625	1.963	(15.9)	(12.665)
	0.430	1.351	(10.9)	(8.72)				
	0.475	1.492	(12.0)	(9.63)				
	0.490	1.539	(12.4)	(9.93)				
	0.625	1.963	(15.9)	(12.66)				
Sheath Materials **Maximum Operating** **Temperature**	Stock:	Incoloy®	1600°F	(870°C)	Stock:	Incoloy®	1200°F	(650°C)
		316 stainless steel	1200°F	(650°C)				
		Steel	750°F	(400°C)				
		Copper	350°F	(175°C)				
	M-t-O:	Inconel® 600	1800°F	(980°C)	M-t-O:	Incoloy®	1600°F	(870°C)
		Incoloy®	1600°F	(870°C)		316 stainless steel	1200°F	(650°C)
		316 stainless steel	1200°F	(650°C)		304 stainless steel	1200°F	(650°C)
		304 stainless steel	1200°F	(650°C)		Steel	750°F	(400°C)
		Steel	750°F	(400°C)				
		Copper	350°F	(175°C)				
		Monel®	Consult Factory					
		Titanium	Consult Factory					
Sheath Length By Diameter inch (mm)	**Dia.**	**Sheath Length**	**Dia.**	**Sheath Length**	**Dia.**	**Sheath Length**	**Dia.**	**Sheath Length**
	Stock:				Stock:			
	0.260	20 to 80	(6.6)	(510 to 2030)	0.375	15 to 40	(9.5)	(380 to 1015)
	0.315	12 to 100	(8.0)	(305 to 2540)				
	0.375	11 to 180	(9.5)	(275 to 4555)				
	0.430	15 to 120	(10.9)	(380 to 3050)				
	0.475	20 to 157	(12.0)	(510 to 3990)				
	M-t-O:				M-t-O:			
	0.210	9 to 130	(5.3)	(230 to 3300)	0.375	11 to 125	(9.5)	(280 to 3175)
	0.260	9 to 275	(6.6)	(230 to 6980)	0.430	11 to 106	(10.9)	(280 to 2690)
	0.315	9 to 270	(8.0)	(230 to 6850)	0.475	11 to 125	(12.0)	(280 to 3175)
	0.332	9 to 125	(8.5)	(230 to 3170)	0.490	11 to 125	(12.4)	(280 to 3175)
	0.375	11 to 325	(9.5)	(280 to 8255)	0.625	11 to 125	(15.9)	(280 to 3175)
	0.430	11 to 268	(10.9)	(280 to 6810)				
	0.475	11 to 275	(12.0)	(280 to 6985)				
	0.490	11 to 275	(12.4)	(280 to 6985)				
	0.625	11 to 275	(15.9)	(280 to 6985)				

Tubular and Process Assemblies

WATROD Heating Elements

Specifications

Double-Ended

Single-Ended

	Double-Ended				Single-Ended			
Minimum No-Heat Length inch (mm)	**Sheath Length**	**No-Heat Length**	**Sheath Length**	**No-Heat Length**	**Sheath Length**	**No-Heat Length**	**Sheath Length**	**No-Heat Length**
	11 to 20	1	(280 to 510)	(25)	11 to 20	1½	(280 to 5100)	(38)
	21 to 50	1¼	(535 to 1270)	(32)	21 to 50	1¾	(533 to 1270)	(44)
	51 to 80	1½	(1295 to 2030)	(38)	51 to 80	2⅛	(1295 to 2030)	(54)
	81 to 110	1⅝	(2055 to 2795)	(42)	81 to 110	2⅜	(2055 to 2795)	(60)
	111 to 140	1¾	(2820 to 3555)	(44)	111 to 125	2⅝	(2820 to 3175)	(67)
	141 to 170	2	(3580 to 4320)	(51)				
	171 to 200	2¼	(4345 to 5080)	(57)				
	201 & up	2½	(5105 & up)	(64)	**½ inch (13 mm) No-heat length on all blunt ends**			
Maximum Voltage/Amperage By Dia. inch (mm)	**Dia.**	**Volts**	**Amps**		**Dia.**	**Volts**	**Amps**	
	0.260 (6.6)	250V~(ac)	15		0.375 (9.5)	480V~(ac)	30	
	0.315 (8.0)	480V~(ac)	30		0.430 (10.9)	480V~(ac)	30	
	0.332 (8.5)	480V~(ac)	30		0.475 (12.0)	480V~(ac)	30	
	0.375 (9.5)	480V~(ac)	30		0.490 (12.4)	480V~(ac)	30	
	0.430 (10.9)	600V~(ac)	40		0.625 (15.9)	480V~(ac)	30	
	0.475 (12.0)	600V~(ac)	40					
	0.490 (12.4)	600V~(ac)	40					
	0.625 (15.9)	600V~(ac)	40					
Ohms Per Heated Inch By Dia. inch	**Dia.**	**Minimum**	**Maximum**		**Dia.**	**Minimum**	**Maximum**	
	0.210	0.100Ω	16Ω					
	0.260	0.080Ω	25Ω		0.375	0.200Ω	34Ω	
	0.315	0.050Ω	25Ω		0.430	0.200Ω	34Ω	
	0.332	0.050Ω	23Ω		0.475	0.200Ω	34Ω	
	0.375	0.020Ω	18Ω		0.490	0.200Ω	34Ω	
	0.430	0.025Ω	30Ω		0.625	0.200Ω	34Ω	
	0.475	0.030Ω	30Ω					
	0.490	0.030Ω	30Ω					
	0.625	0.030Ω	25Ω					
Terminations	Stock:	Threaded stud			Stock:	Flexible lead wires		
	M-t-O:	Threaded stud Screw lug (plate) Quick connect (spade) Flexible lead wires Rubber overmolds			M-t-O:	Flexible lead wires Rubber overmolds		
Seals	Stock:	Silicone resin	390°F	(200°C)	Stock:	Silicone resin	390°F	(200°C)
	M-t-O:	Ceramic base	2800°F	(1535°C)	M-t-O:	Silicone rubber (RTV)	500˚F	(260°C)
		ULTRAGARD	700°F	(375°C)		ULTRAGARD	700°F	(375°C)
		Ceramic-to-metal	500°F	(260°C)		Silicone resin	392°F	(200°C)
		Silicone rubber (RTV)	500°F	(260°C)		Epoxy resin	266/350°F	(130/177°C)
		Silicone resin	392°F	(200°C)				
		Epoxy resin	266/350°F	(130/177°C)				
Mounting Options	Threaded bulkheads Mounting brackets Locator washers Mounting collars				Threaded bulkhead Locator washers Mounting collars			
Surface Finish Options	Belt polishing Passivation		Bright Anneal		Belt polishing Passivation		Bright Anneal	
Agency Recognition	UL® Component to 480V~(ac) (file # E52951/E56488) CSA Component to 600V~(ac) (file # 31388)				UL® Component to 240V~(ac) (file # E52951) CSA Component to 240V~(ac) (file # 31388) ①			

① Not applicable to 0.375 inch diameter single-ended WATROD

WATROD Heating Elements

Options

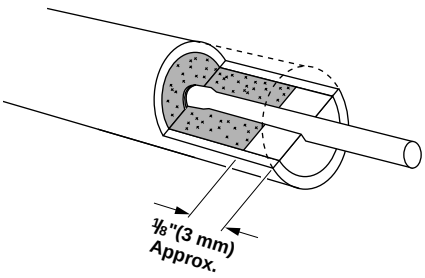

Moisture Resistant Seals

WATROD's MgO insulating material is hygroscopic. To prevent moisture contamination from entering the heater, an appropriate moisture seal must be used. Choosing the correct seal is important to the life and performance of the heater. Be sure the maximum continuous use temperature is not exceeded at the seal location. Most end seals are applied with a small cavity in the end of the heater. The seal will also help prevent arcing at the terminal ends.

End Seal Options

End Seal	Code Number	Color	Seal Depth	UL® Recognition	Max. Cont. Use Temperature	Typical or General Usage/Application
Standard Epoxy	**EC**	Cream	3/16"	Yes	266°F (130°C)	General purpose for moisture resistance
Intermediate Epoxy	**EB**	Blue	3/16"	Yes	350°F (177°C)	Intermediate temp. rating for moisture resistance
High-Temp. Epoxy	**HTE**	Amber	3/16"	No	450°F (232°C)	Higher temp. rating for moisture resistance
Silicone Resin	**SR**	Clear	1/16"	Yes	392°F (200°C)	General usage on tubular products
Silicone Fluid	**SF**	Clear	N/A	No	392°F (200°C)	Moisture resistance of the MgO, or High-Temp. ceramic seal (storage only)
Lavacone	**LC**	Dark Brown	3/16"	Yes	392°F (200°C)	Porous seal for the FIREBAR
Silicone Rubber RTV	**RTV**	Red-Orange	3/16"	Yes	500°F (260°C)	General usage on FIREBAR applications
ULTRAGARD	**UG**	Clear	3/16"	Yes	700°F (350°C)	High temp. around seal area and for vacuum applications
High-Temp. Ceramic	**HTC**	White	3/16"	No	2800°F (1538°C)	Very high temperature applications

Ceramic-to-Metal End Seal

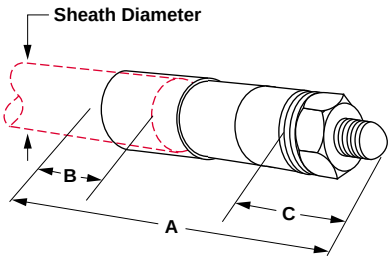

Sheath Diameter inch	(mm)	A inch	(mm)	B inch	(mm)	C inch	(mm)	Thread Size
0.260	(6.6)	1 11/16	(40)	1/2	(13)	13/32	(10)	#8-32
0.315	(8)	1 7/8	(43)	1/2	(13)	13/32	(10)	#10-32
0.430	(10.9)	2 1/8	(54)	1/2	(13)	21/32	(10)	#1/4-28

To order specify, **ceramic-to-metal end seal**.

Ceramic-to-metal end seals with threaded stud terminations provide an air-tight seal for continuous terminal temperatures up to 500°F (260°C). Watlow does not recommend this seal if terminations are exposed to temperatures exceeding 500°F (260°C).

External Finishes

Belt Polishing

Belt polishing sands the oxidized sheath to a bright finish. This finish is available only on alloy sheath materials.

To order, specify **belt polishing**.

Bright Annealing

A process that produces a smooth, metallic finish. It is a special annealed finish created in a non-oxidizing atmosphere. This finish is popular in the pharmaceutical and food and beverage markets.

To order, specify **bright annealing**.

Passivation

During the manufacturing process, particles of iron or tool steel may become embedded in the stainless steel or alloy sheath. If not removed, these particles may corrode, produce rust spots and/or contaminate the process. For critical sheath applications, passivation will remove free iron from the sheath.

To order, specify **passivation**.

Tubular and Process Assemblies

WATROD Heating Elements

WATROD Terminations

Double-ended WATROD elements are available with a variety of terminations. Single-ended WATROD elements are available with only flexible lead wires.

The following table and illustrations detail the terminations available with double- or single-ended WATRODs—for each available sheath diameter.

Standard flexible lead wires are 12 inches (305 mm), Sil-A-Blend™ 390°F (200°C) unless otherwise specified. Insulation options include TGGT (480°F/250°C) plus other temperature ratings. Consult factory for availability.

Overmolds are available for flexible lead wires only. Available in silicone rubber (390°F/200°C), neoprene (212°F/90°C) and other materials. Consult factory for details.

WATROD Element	Sheath Diameter inch	(mm)	Threaded Stud① A	Screw Lug (Plate) B	C	D	Quick Connect (Spade) E	F	G	Flexible Lead Wires H	Lead Wire Overmolds J
Double-Ended	0.260	(6.6)	#6-32	Yes	Yes	Yes	Yes	Yes	Yes	Yes	Yes
	0.315	(8.0)	#10-32	Yes	Yes	Yes	Yes	Yes	Yes	Yes	Yes
	0.335	(8.5)	#10-32	Yes	Yes	Yes	Yes	Yes	Yes	Yes	No
	0.375	(9.5)	#10-32	Yes	Yes	Yes	Yes	Yes	Yes	Yes	No
	0.430	(10.9)	#10-32	Yes	Yes	Yes	Yes	Yes	Yes	Yes	Yes
	0.475	(12.0)	#10-32	Yes	Yes	Yes	Yes	Yes	Yes	Yes	Yes
	0.490	(12.4)	#10-32	Yes	Yes	Yes	Yes	Yes	Yes	Yes	No
	0.625	(15.9)	#10-32	Yes	Yes	Yes	Yes	Yes	Yes	Yes	No
Single-Ended	0.375	(9.5)	No	No	No	No	No	No	No	Yes	No
	0.430	(10.9)	No	No	No	No	No	No	No	Yes	Yes
	0.475	(12.0)	No	No	No	No	No	No	No	Yes	Yes
	0.490	(12.4)	No	No	No	No	No	No	No	Yes	No
	0.625	(15.9)	No	No	No	No	No	No	No	Yes	Yes

Threaded Stud

A

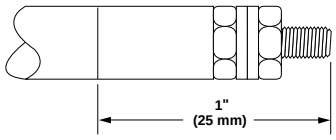

① Optional #8-32, ¼ inch and 4 or 5 mm studs available. Consult factory for details.

Screw Lug (Plate)

B

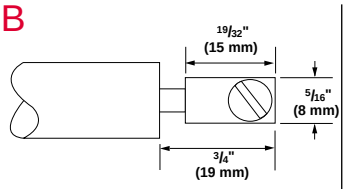

C

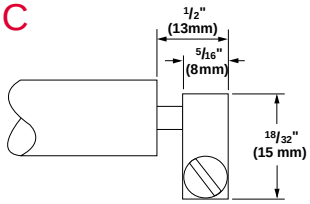

D

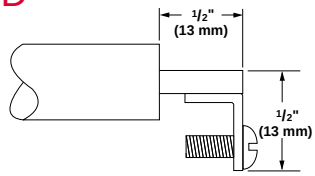

Quick Connect (Spade)

E

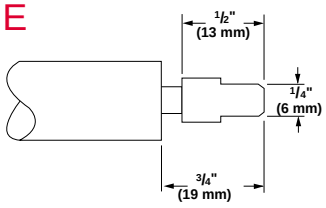

F

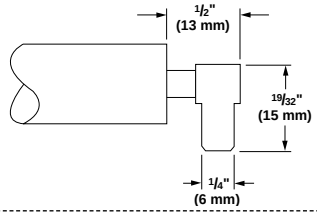

G

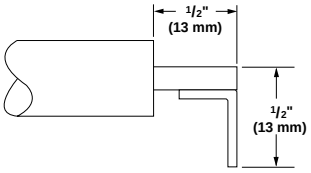

Flexible Lead Wires

H

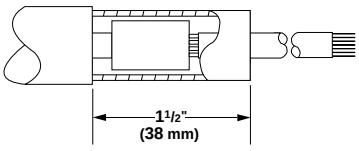

Rubber Overmolds

J

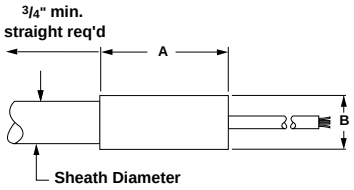

Overmold Availability

Sheath Diameter inch	(mm)	A inch	(mm)	B inch	(mm)
0.260	(6.6)	2½	(63.5)	½	(13.0)
0.315	(8.0)	2½	(63.5)	½	(13.0)
0.375	(9.5)	2½	(63.5)	⅝	(15.9)
0.430	(10.9)	2½	(63.5)	⅝	(15.9)
0.475	(12.0)	2½	(63.5)	⅝	(15.9)
0.625	(15.9)	2½	(63.5)	⅞	(22.2)

WATROD Heating Elements

Double-Ended WATROD Bend Formations

Double-ended WATROD heating elements can be formed into spirals, compounds, multi-axis and multi-planes from 36 common bend configurations. Custom bending with tighter tolerances can be made to meet specific application needs.

Formation is limited by the minimum bend radius (R) and the straight length (F) required beyond the bend. In order to locate the end of a heated length within a bend, the radius must be three inches (76 mm) or larger. Additionally, overall length tolerance (T) must be included in one or more of the straight lengths.

Minimum radius for various sheath diameters and lengths are shown in the *Bend Formations* chart below. Illustrated on **pages 282 to 286** are the 36 common bend configurations available on both stock and made-to-order WATROD heating elements.

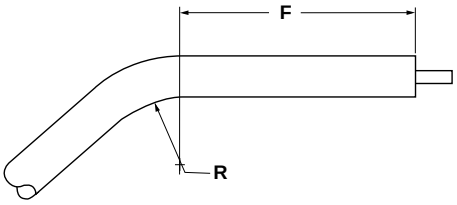

Single-Ended WATROD Bend Formations

Watlow does not recommend field bending single-ended WATROD elements. Formation is limited by the minimum radius of a bend (R) and the straight length (F) beyond the bend. The radius must be three inches (75 mm) or more for the heated length's end to be inside a bend.

Additionally, the overall length tolerance (T) must be provided for in one or more of the specified lengths.

The four common bend configurations available for standard and made-to-order single-ended WATROD elements are Figures 1, 6, 22 and 28.

To order a common bend formation, specify the **bend figure number**, dimensions and critical tolerances.

WATROD Length Tolerance (T)

Sheath Length inch	Sheath Length (mm)	Length Tolerance inch	Length Tolerance (mm)
11-50	(280-1270)	±⅛	(±3)
51-110	(1295-2795)	±3/16	(±5)
111-170	(2820-4320)	±¼	(±6)
171-200	(4345-5080)	±⅜	(±10)
201 & up	(5105 & up)	±½	(±13)

WATROD Minimum Radius

Sheath Diameter inch	Sheath Diameter (mm)	Field Bend R① inch	Field Bend R① (mm)	Factory R① inch	Factory R① (mm)	F② Dimension inch	F② Dimension (mm)
0.260	(6.6)	¾	(19)	⅜	(10)	½	(13)
0.315	(8.0)	¾	(19)	½	(13)	½	(13)
0.335	(8.5)	1	(25)	½	(13)	1	(25)
0.375	(9.5)	1	(25)	½	(13)	½	(13)
0.430	(10.9)	1	(25)	½	(13)	¾	(19)
0.475	(12.0)	1	(25)	⅝	(16)	1	(25)
0.490	(12.5)	1	(25)	⅝	(16)	1	(25)
0.625	(15.9)	1½	(38)	¾	(19)	1 ½	(38)

① R is the inside radius of a bend.
② F is the distance from the sheath's end to the start of the first bend.

Bend Formations

Figure 1

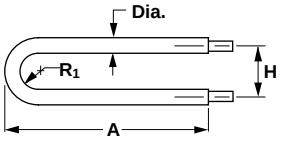

$SL = 2A + 1.14R_1 - 0.43$ Dia.
(For pricing, use 1 bend)

Figure 2

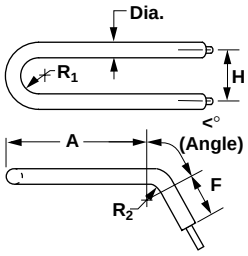

$SL = 2A + 2F + 1.14R_1 + 0.0175$ (<°) $(2R_2 + \text{Dia.}) - 0.43$ Dia.
(For pricing, use 3 bends)

Figure 3

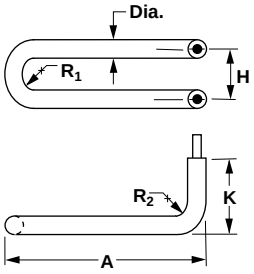

$SL = 2K - 0.86R_2 - 2.86$ Dia. $+ 2A + 1.14R_1$
(For pricing, use 3 bends)

Tubular and Process Assemblies

WATROD Heating Elements

Figure 4

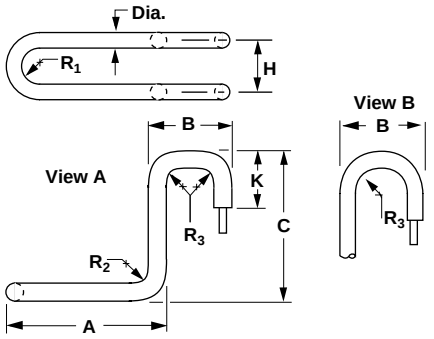

View A: SL = 2K- 1.72R_3 - 7.72 Dia. + 2C - 0.86R_2 + 2A + 1.14R_1
View B: SL = 2K- 2.28R_3 - 3.72 Dia. + 2C - 0.86R_2 + 2A + 1.14R_1
(For pricing, use 5 bends)

Figure 5

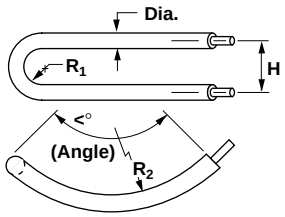

SL = 0.0175(<°) (2R_2 + Dia.) +1.14R_1 + 0.43 Dia.
(For pricing, use 3 bends)

Figure 6

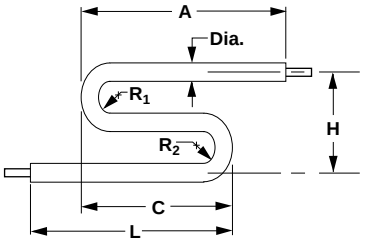

SL = L + 1.14R_2 - 0.86 Dia. + C + 1.14R_1 + A
(For pricing, use 2 bends)

Figure 7

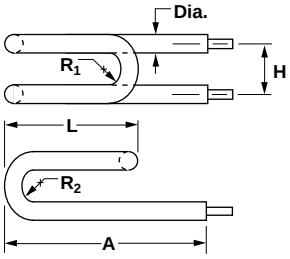

SL = 2A + 2.28R_2- 1.29 Dia. + 2L + 1.14R_1
(For pricing, use 3 bends)

Figure 8

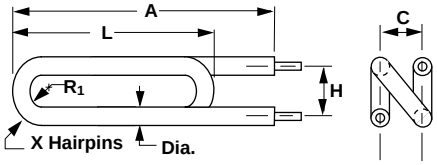

X = number of outside hairpins
SL = 2A + 3.42R_1 - 1.29 Dia. + 2L
(For pricing, use 5 bends)

Figure 9

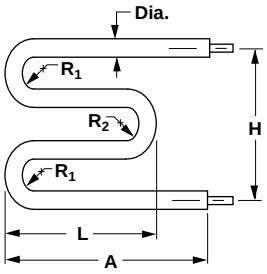

SL = 2A + 2.28R_1 - 1.29 Dia. + 2L + 1.14R_2
(For pricing, use 3 bends)

Figure 10

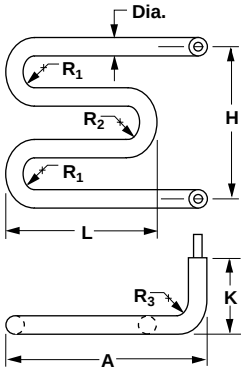

SL = 2K - 0.86R_3 - 3.72 Dia. + 2A + 2L + 2.28R_1 + 1.14R_2
(For pricing, use 5 bends)

Figure 11

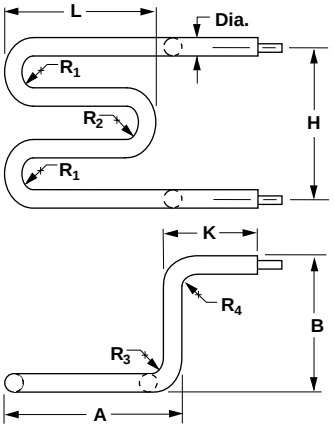

SL = 2K - 086R_3 - 0.86R_4 - 6.15 Dia. + 2B + 2A + 2L + 2.28R_1 + 1.14R_2
(For pricing, use 7 bends)

Figure 12

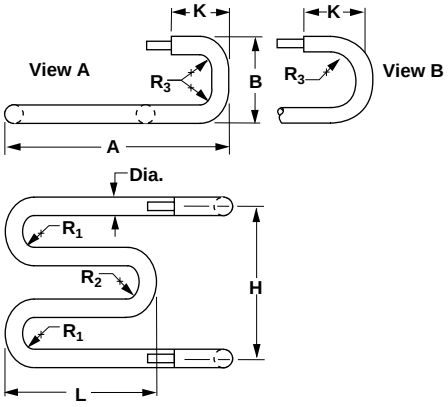

View A: SL = 2K + 2B + 2A + 2L + 2.28R_1 + 1.14R_2 - 1.72R_3 - 6.15 Dia.
View B: SL = 2K + 2A + 2L + 2.28R_1+ 1.14R_2 - 2.28R_3 - 2.15 Dia.
(For pricing, use 5 bends)

WATROD Heating Elements

Figure 13

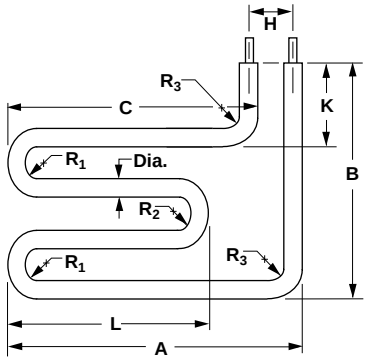

SL = 2B + 2A + 2L - 6.717 Dia. - $1.717R_1$ - H - $0.858R_2$ - $0.858R_3$
(For pricing, use 5 bends)

Figure 14

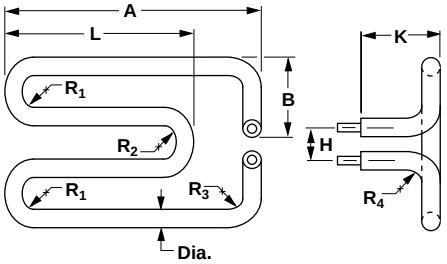

SL+2K+2A+2L+$2.28R_1$+$1.14R_2$+2B -6.15 Dia. -$0.86R_3$+$0.86R_4$
(For pricing use 7 bends)

Figure 15

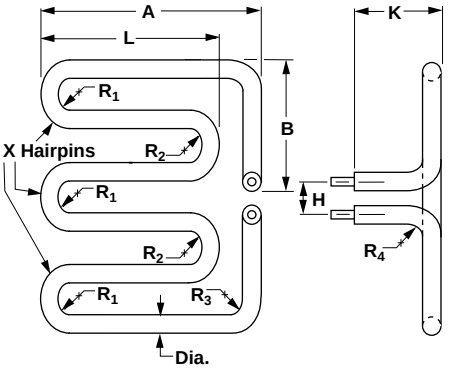

X = number of outside hairpins
SL = 2K + 2A + 2K(X - 1) + 2B - $0.86R_3$ - $0.86R_4$ + $1.14R_1$ (X) + $1.14R_2$ (X - 1) - 4.86 Dia. - (2X - 1) 0.43 Dia.
(For pricing, use 9 bends if X = 3 hairpins)

Figure 16

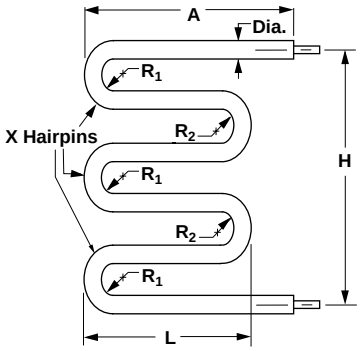

X = number of outside hairpins
SL = 2A + 0.43 Dia. (1 - 2X) + 2L (X - 1) + $1.14R_1$ + $1.14R_2$ (X - 1)
(For pricing, use 5 bends if X = 3 hairpins)

Figure 17

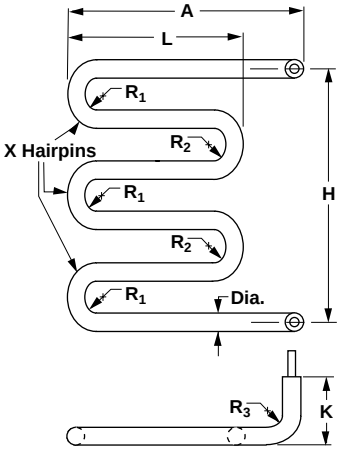

X = number of outside hairpins
SL = $1.14R_2$ X - 0.88 Dia. X - $1.14R_2$ - 2 Dia. + $1.14R_1$ X -$0.86R_3$ + 2L X - 2L + 2A + 2K
(For pricing, use 7 bends if X = 3 hairpins)

Figure 18

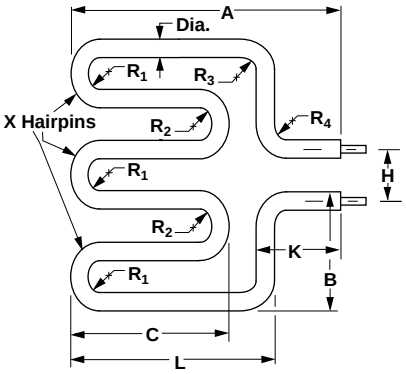

X = number of outside hairpins
SL = 2L + 2K + 2B + 2C (X - 1) - $0.86R_3$ - $0.86R_4$ - 4.86 Dia. + $1.14R_1$ (X) + $1.14R_2$ (X - 1) - (2X - 1) 0.43 Dia.
(For pricing, use 9 bends if X = 3 hairpins)

Tubular and Process Assemblies

WATROD Heating Elements

Figure 19

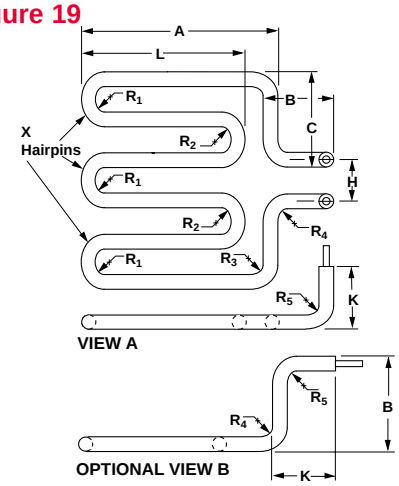

X = number of outside hairpins
View A and B: SL = 2K + 2A + 2B + 2C + 2L (X - 1) + $1.14R_1$ (X) + $1.14R_2$ (X - 1) - $0.86R_3$ - $0.86R_4$ - $0.86R_5$ - 7.29 Dia. - (2X - 1) 0.43 Dia.
(For pricing, use 11 bends if X = 3 hairpins)

Figure 20

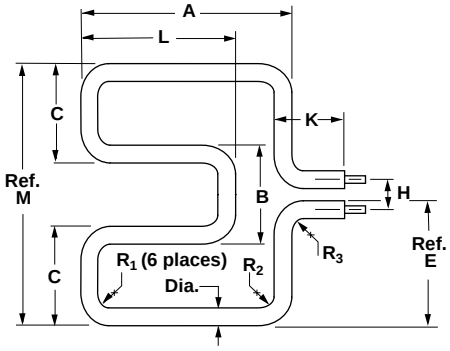

SL = 2K + 2C + B + 2A + 2L - $2.58R_1$ - $0.86R_2$ - $0.86R_3$ - 12.15 Dia.
(For pricing, use 10 bends)

Figure 21

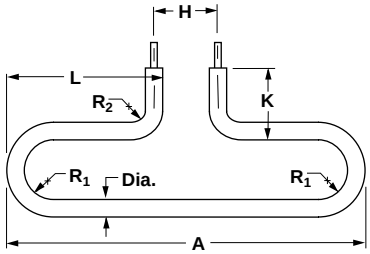

SL = 2A + 2K - H - $2.28R_1$ - $0.86R_2$ - 3.29 Dia.
(For pricing, use 4 bends)

Figure 22

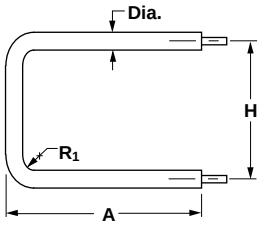

SL = 2A - $0.86R_1$ - 1.43 Dia. + H
(For pricing, use 2 bends)

Figure 23

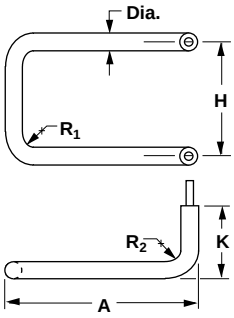

SL = 2K - $0.86R_2$ - 3.86 Dia. + 2A - $0.86R_1$ + H
(For pricing, use 4 bends)

Figure 24

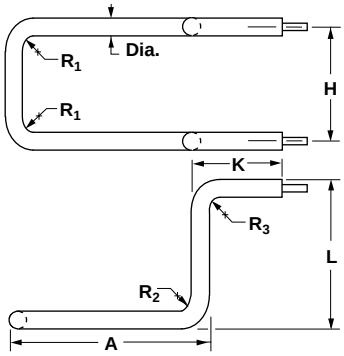

SL = 2K + 2L + H - $0.86R_1$ - $0.86R_2$ - $0.86R_3$ - 7.29 Dia.
(For pricing, use 6 bends)

Figure 25

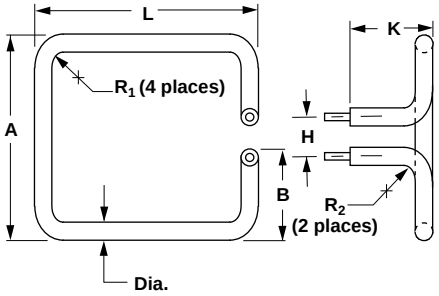

SL = 2K + 2A + 2L - H - $1.72R_1$ - $0.86R_2$ - 6.92 Dia.
(For pricing, use 6 bends)

Figure 26

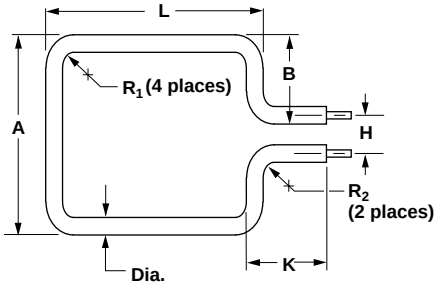

SL = 2K + 2A + 2L - H - $1.72R_1$ - $0.86R_2$ - 6.29 Dia.
(For pricing, use 6 bends)

Figure 27

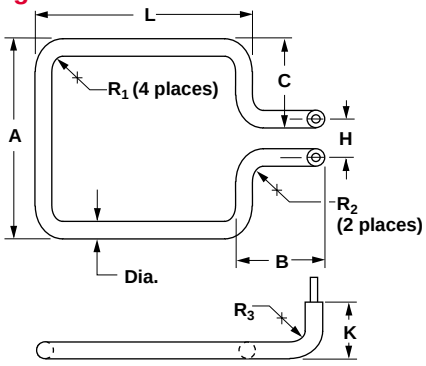

SL = 2K + 2A + 2L + 2B - H - $1.72R_1$ - $1.72R_2$ - 8.72 Dia.
(For pricing, use 8 bends)

WATROD Heating Elements

Figure 28

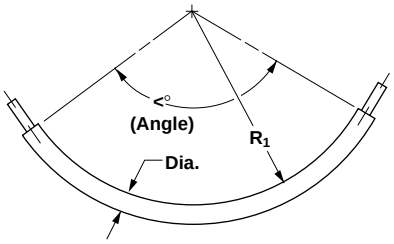

SL = 0.0175 <° (R_1 + 0.5 Dia.)
(For pricing, use 1 bend)

Figure 29

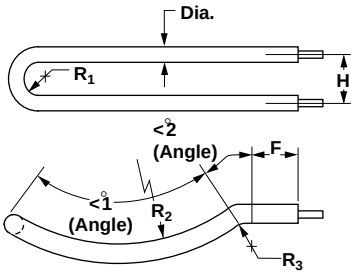

SL = 0.0175 <°1 (2R_2 + Dia.) + 2F + 1.14R_1 + 0.0175 <°2 (2R_3 + Dia.) - 0.43 Dia.
(For pricing, use 5 bends)

Figure 30

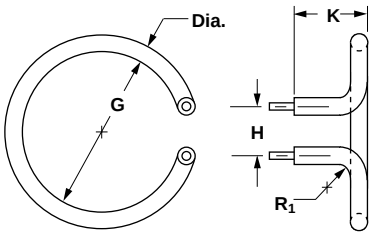

SL = (G + Dia.) 3.14 + 1.14R_1 + 2K + 3.28 Dia. - H
(For pricing, use 4 bends)

Figure 31

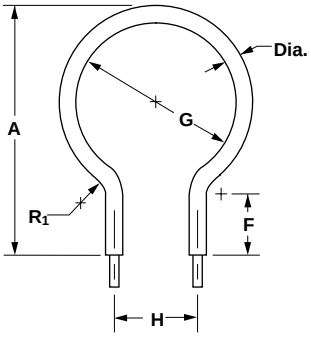

SL = (G + Dia.) 3.14 + 1.14R_1 + 2F + 3.71 Dia. - H
(For pricing, use 4 bends)

Figure 32

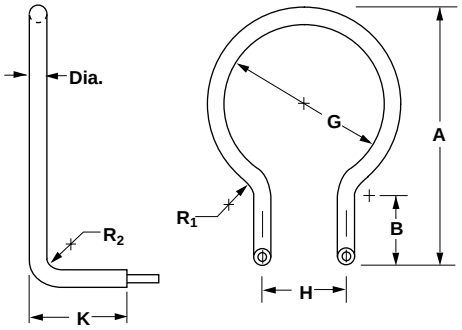

SL = (G + Dia.) 3.14 + 1.14R_1 + 2B + 1.14R_2 + 2K + 3.28 Dia. - H
(For pricing, use 6 bends)

Figure 33

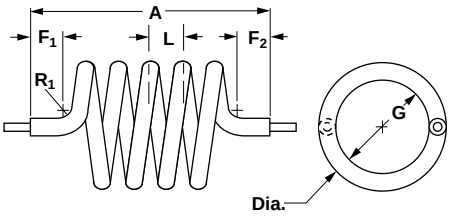

SL = [(G + Dia.) (3.14) (Number of 360°'s)] + F1 + F2
(For pricing, consult factory)

Figure 34

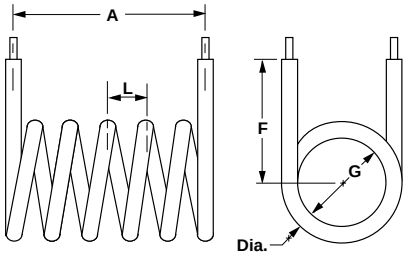

SL = [(G + Dia.) (3.14) (Number of 360°'s)] + 2F
(For pricing, consult factory)

Figure 35

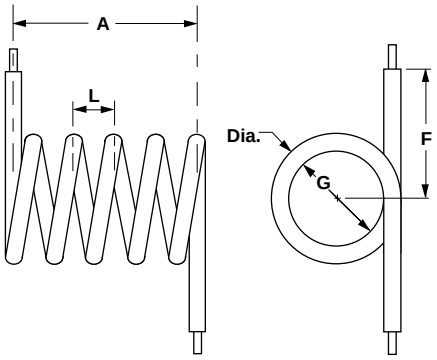

SL = [(G + Dia.) (3.14) (Number of 360°'s)] + 2F
(For pricing, consult factory)

Figure 36

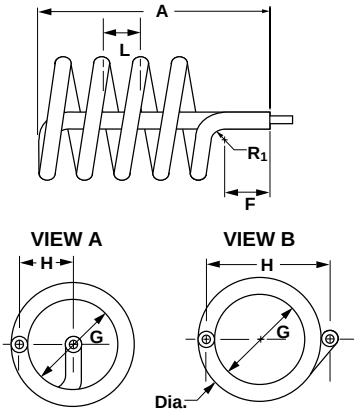

SL = [(G + Dia.) (3.14) (Number of 360°'s)] + (G ÷ 2) + A + F
(For pricing, consult factory)

Tubular and Process Assemblies

WATROD Heating Elements

Mounting Methods

Brackets

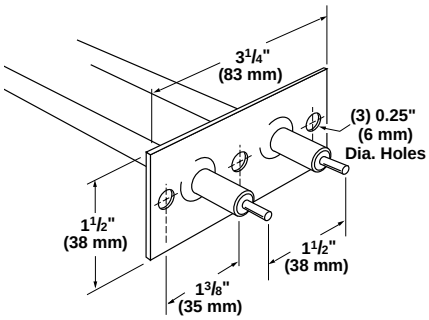

A 0.065 inch (1.7 mm) thick stainless steel bracket provides element mounting in non-pressurized applications. Attached to the heater sheath, these brackets are not suited for liquid-tight mountings. The bracket is located ½ inch (13 mm) from the sheath's end, unless otherwise specified.

To order, specify **mounting bracket**.

Threaded Bulkheads

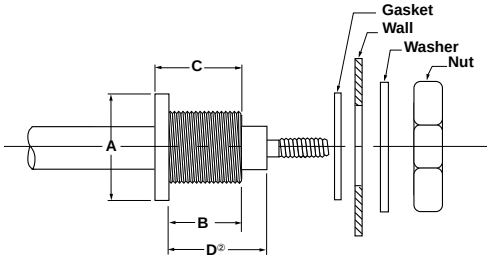

A threaded bushing with flange on the heater sheath provides rigid, leak-proof mounting through the walls of tanks. A gasket, plated steel washer and hex nut are included. The threaded end of the bushing is flush with the sheath's end unless otherwise specified. Threaded bulkheads are available in brass, steel or stainless steel as indicated in the table.

To order, specify **threaded bulkheads** and the specifications from the table.

Single Leg Bracket

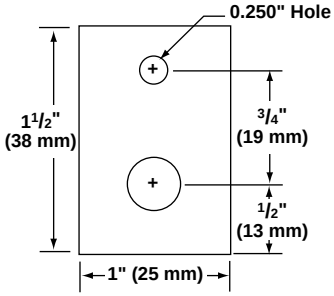

A 1 ½ inch (38 mm) x 1 inch (25 mm) wide x 16 gauge stainless steel bracket with one element hole and one mounting hole ½ inch from end.

To order, specify **single leg bracket**.

Locator Washers

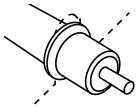

Stainless steel locator washers retain the heated area of the sheath in the work zone, while allowing for expansion and contraction during cycling.

To order, specify **locator washer**, along with dimension from the heater's end.

Mounting Collars

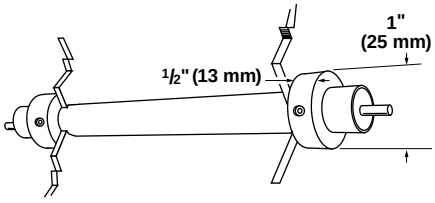

Plated steel mounting collars secure the heater sheath with set screws to serve as adjustable stops for through-the-wall mounting. Collars are shipped in bulk.

To order, specify **mounting collars**.

Threaded Bulkhead Specifications

Element Diameter inch	(mm)	Material	Thread Size	A① Flange Size/Style inch	(mm)	B Threaded Length inch	(mm)	C Overall Length inch	(mm)
0.260	(6.6)	Brass	½ - 20 UNF	¾ Round	(19)	⅝	(15.9)	¾	(19)
0.260	(6.6)	Steel	½ - 20 UNF	¾ Hex	(19)	⅝	(15.9)	¾	(19)
0.260	(6.6)	S. Steel	½ - 20 UNF	¾ Round	(19)	⅝	(15.9)	¾	(19)
0.315	(8.0)	Brass	½ - 20 UNF	¾ Round	(19)	⅝	(15.9)	¾	(19)
0.315	(8.0)	Steel	½ - 20 UNF	¾ Hex	(19)	¾	(19.0)	15/16	(24)
0.315	(8.0)	S. Steel	½ - 20 UNF	¾ Round	(19)	¾	(19.0)	27/32	(21)
0.375	(9.5)	Brass	½ - 20 UNF	¾ Round	(19)	⅝	(15.9)	¾	(19)
0.375	(9.5)	Steel	½ - 20 UNF	¾ Hex	(19)	¾	(19.0)	15/16	(24)
0.375	(9.5)	S. Steel	½ - 20 UNF	¾ Round	(19)	¾	(19.0)	27/32	(21)
0.430	(10.9)	Brass	⅝ - 18 UNF	⅞ Hex	(22)	¾	(19.0)	15/16	(24)
0.430	(10.9)	Steel	⅝ - 18 UNF	⅞ Round	(22)	¾	(19.0)	15/16	(24)
0.430	(10.9)	S. Steel	⅝ - 18 UNF	1 Round	(25)	¾	(19.0)	15/16	(24)
0.475	(12.1)	Brass	⅝ - 18 UNF	⅞ Round	(22)	¾	(19.0)	15/16	(24)
0.475	(12.1)	Steel	⅝ - 18 UNF	1 Round	(25)	1	(25.0)	1⅛	(29)
0.475	(12.1)	S. Steel	⅝ - 18 UNF	1 Round	(25)	¾	(19.0)	15/16	(24)
0.490	(12.4)	Brass	¾ - 16 UNF	1 Round	(25)	¾	(19.0)	1	(25)
0.490	(12.4)	Steel	¾ - 16 UNF	1 Hex	(25)	¾	(19.0)	1	(25)
0.490	(12.4)	S. Steel	¾ - 16 UNF	1 Round	(25)	¾	(19.0)	1	(25)
0.625	(15.9)	S. Steel	⅞ - 14 UNF	1 Round	(25)	¾	(19.0)	1	(25)

① Designates the dimension across flats for hex flange style and outside diameter for round flange style.
② Equal to "B" Dimension unless otherwise specified.

WATROD Heating Elements

Tubular PLUS Program

Watlow's Tubular PLUS Program is an innovative stocking program that allows formed tubular heaters to be shipped in three to six days, instead of the four to six weeks it takes most manufacturers.

The Tubular PLUS Program allows customers to order the desired heated length, cold length, diameter, heater wattage, voltage, formation and termination option.

By utilizing stocked 0.315 inch or 0.430 inch diameter Incoloy® elements, an appropriate heater is selected from stock and modified to fit the physical description of the required heater. The heater is annealed to remove moisture and enable bending and then formed to the desired configuration. In most cases the only variation will be a slight difference in the heater wattage.

Because Watlow will now stock additional tubular elements, the Tubular PLUS Program reduces downtime, lowers inventories and increases overall customer value.

Features and Benefits

- **Availability of 0.315 inch and 0.430 inch diameters;** most commonly requested for formed tubular heaters.
- **Cold ends from one inch to 18 inches** provide increased capabilities for short and long cold ends.

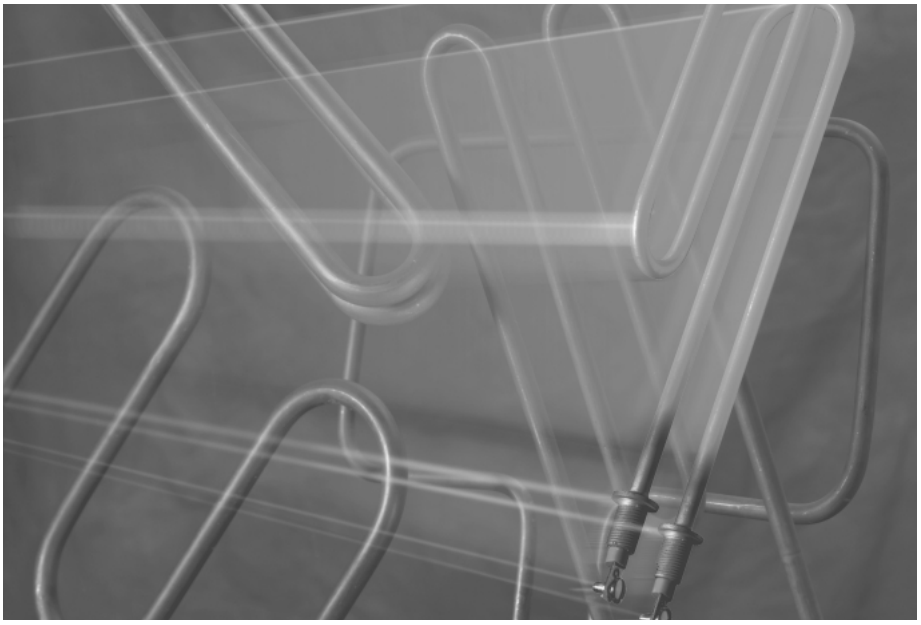

- **Minimum heated lengths to four inches** provide shorter heated lengths than currently available using conventional tubulars.
- **Incoloy® 800 sheath material** provides the highest quality sheath material for immersion and air applications.

PLUS One

- **Quick delivery: three to six days vs. four to six weeks** results in reduced downtime, lower inventories and increased overall customer value.

PLUS Two

- **Precise location of cold ends and heated lengths** assists in applying heater and in proper bending, allows uniform heating in platens and puts the heat within the application.

PLUS Three

- **Longer element lengths** allows use of one element to replace multiple elements and reduces terminations.

Applications

- Plastics-Hot runner molds
- Packaging-Seal bars
- Semiconductor-CVD, PVD
- Cast-in heater platens

Options

- Maximum heated length: 118 inches, up to 18 inches cold length on each side.
- All standard WATROD options are available.
- Selection of formation numbers 1, 3, 6, 7, 8, 11, 15, 16, 17, 18, 21, 22, 23, 25, 26, 30 and 31 **(pages 282-286)** offer quick delivery. Special formations will increase delivery times. Please consult factory for details.
- To determine if program is applicable to your needs, please contact your local Watlow sales representative.

Incoloy® is a registered trademark of Special Metals Corporation.

Tubular PLUS Program Fax Back Order Form

Fax to 1-800-697-4329 or outside U.S. 1-573-221-3723

Customer Name

Customer Number

Ship to Address:

Street

City

State

ZIP

Ordered By

Order Date

Purchase Order #

Delivery Date

Ship VIA

List/Net Price/Unit

NSUC

Heater Description

General Description

Heater Voltage

Heater Wattage *(watts)* **desired**

Heater Wattage *(watts)* **actual**

Diameter: *(0.315" or 0.430")*

Material *(Incoloy®)*

Heated Length / inches *(4" min.)*

Cold End 1 Length / inches *(1" - 18")*

Cold End 2 Length / inches *(1" - 18")*

Belt Polishing: *(Yes, No)*

Moisture Seal: *(Epoxy, Ceramic, Ceramic to Metal, Silicone, None)*

Product Number

Quantity *(1-12 pieces)*

Termination Type: *(A, B, C, D, E, F, G)*

Leadwire: *(Sil-A-Blend™ - 200°C, TGGT - 250°C, Overmold)*

Leadwire length *(Inches in dec.)*

Bulkhead Type: *(Brass, Steel, St. Steel)*

Mounting: *(Brackets, Locator Washers, Mounting Collars)*

Bracket / washer location: *(From element end, ½" standard)*

Formation Details

Formation #: *(1,3,6,7,8,11,15,16,17,18,21,22,23,25,26,30,31)*

Dimensions:

A Dimension in inches

B Dimension in inches

C Dimension in inches

G Dimension in inches

H Dimension in inches

L Dimension in inches

K Dimension in inches

X Number of outside hairpins

R *(In ⅛" increments)*

R1 *(In ⅛" increments)*

R2 *(In ⅛" increments)*

R3 *(In ⅛" increments)*

R4 *(In ⅛" increments)*

F.O.B.: Hannibal, Missouri

WATROD Heating Elements

Double-Ended WATROD

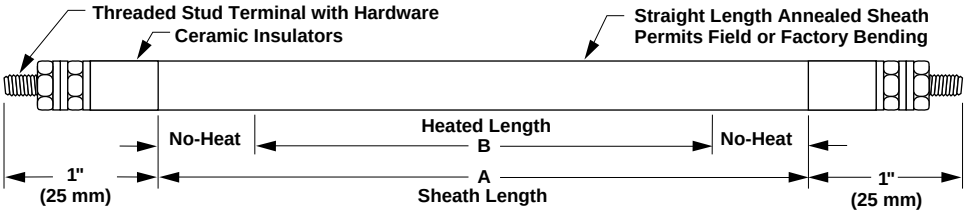

WATROD Description	Sheath A Dimension		Heated B Dimension		Watts	Code Number			Est. Net Weight	
	inch	(mm)	inch	(mm)		120V~(ac)	240V~(ac)	480V~(ac)	lbs	(kg)
Applications: Medium-Weight, Non-Circulating Oil, Heat-Transfer Oil										
15 W/in²	29⅞	(759)	22⅜	(568)	500		**RGSS29R10S**		1.0	(0.5)
0.475" Dia.	38⅜	(975)	29⅞	(759)	667		**RGSS38G10S**	**RGSS38G11S**	1.3	(0.6)
Steel	44¾	(1137)	37¼	(946)	833		**RGSS44G10S**	**RGSS44G11S**	1.7	(0.8)
(2.3 W/cm²)	53⅜	(1356)	44¾	(1137)	1000		**RGSS53G10S**	**RGSS53G11S**	1.9	(0.9)
(12 mm)	68⅜	(1737)	59⅝	(1514)	1333		**RGSS68G10S**	**RGSS68G11S**	2.1	(1.0)
	83⅜	(2118)	74½	(1892)	1667		**RGSS83G10S**	**RGSS83G11S**	2.5	(1.1)
	98⅜	(2499)	89½	(2273)	2000		**RGSS98G10S**	**RGSS98G11S**	3.0	(1.4)
	120⅜	(3057)	111⅞	(2842)	2500		**RGSS120G10S**	**RGSS120G11S**	3.9	(1.8)
	142⅞	(3629)	134¼	(3410)	3000		**RGSS142R10S**	**RGSS142R11S**	4.1	(1.9)
Application: Air Heating										
20 W/in²	48¾	(1238)	38¾	(984)	1000		**RCN48N10S**	**RCN48N11S**	1.0	(0.5)
0.430" Dia.	58¾	(1492)	48¾	(1238)	1250		**RCN58N10S**	**RCN58N11S**	1.1	(0.5)
Incoloy®	73¾	(1873)	63¾	(1619)	1667			**RCN73N11S**	1.4	(0.7)
(3.1 W/cm²)	91¾	(2330)	81¾	(2076)	2083			**RCN91N11S**	1.7	(0.8)
(10.9 mm)										
Applications: Caustic Solutions, Air Heating										
23 W/in²	29	(737)	22	(559)	500	**RBN291S**			0.4	(0.2)
Incoloy®	40	(1016)	33	(839)	750	**RBN401S**			0.5	(0.3)
0.315" Dia.	51	(1296)	44	(1118)	1000	**RBN511S**			0.7	(0.4)
(3.6 W/cm²)										
(8 mm)										
23 W/in²	39	(991)	27	(686)	1000	**RGNA391S**	**RGNA3910S**	**RGNA3911S**	1.2	(0.6)
0.475" Dia.	54	(1372)	42	(1067)	1500		**RGNA5410S**	**RGNA5411S**	1.6	(0.8)
Incoloy®	69	(1753)	57	(1448)	2000		**RGNA6910S**	**RGNA6911S**	2.1	(1.0)
(3.6 W/cm²)	84	(2134)	72	(1829)	2500		**RGNA8410S**	**RGNA8411S**	2.5	(1.2)
(12 mm)	99	(2515)	87	(2210)	3000		**RGNA9910S**	**RGNA9911S**	3.0	(1.4)
	106	(2692)	94	(2388)	2778			**RGNA10611S**	3.2	(1.5)
	132	(3353)	120	(3048)	4167		**RGNA13210S**	**RGNA13211S**	4.0	(1.8)
	157	(3988)	145	(3683)	5000		**RGNA15710S**	**RGNA15711S**	4.7	(2.2)
Applications: Light Oils, Greases, Heat-Transfer Oils										
23 W/in²	16	(406)	12	(305)	250	**RBS161S**	**RBS1610S**		0.2	(0.1)
0.315" Dia.	18	(457)	14	(356)	250	**RBS181S**			0.3	(0.2)
Steel	21	(533)	17	(432)	350	**RBS211S**	**RBS2110S**		0.3	(0.2)
(3.6 W/cm²)	23⅜	(594)	19⅜	(492)	375	**RBS23G1S**			0.3	(0.2)
(8 mm)	28⅞	(733)	24⅞	(632)	500	**RBS28R1S**			0.4	(0.2)
	29	(737)	24	(610)	500	**RBS291S**	**RBS2910S**		0.4	(0.2)
	42	(1067)	37	(940)	750	**RBS421S**	**RBS4210S**		0.6	(0.3)
	54	(1372)	49	(1245)	1000	**RBS541S**	**RBS5410S**		0.7	(0.4)
	77	(1956)	72	(1829)	1500	**RBS771S**	**RBS7710S**		1.0	(0.5)

CONTINUED

All heating elements are Stock unless otherwise noted.

Truck Shipment only

Availability
Stock: Same day shipment
Standard: Straight length, three weeks; formed with options, four weeks

Tubular and Process Assemblies

WATROD Heating Elements

Double-Ended WATROD

WATROD Description	Sheath A Dimension inch	(mm)	Heated B Dimension inch	(mm)	Watts	Code Number 120V~(ac)	240V~(ac)	480V~(ac)	Est. Net Weight lbs	(kg)
Applications: Light Oils, Greases, Heat-Transfer Oils										
23 W/in²	23	(584)	14	(356)	500	**RGS231S**	**RGS2310S**		0.7	(0.4)
0.475" Dia.	31	(787)	22	(559)	750	**RGS311S**	**RGS3110S**		1.0	(0.5)
Steel	39	(991)	27	(686)	1000	**RGS391S**	**RGS3910S**	**RGS3911S**	1.2	(0.6)
(3.6 W/cm²)	45	(1143)	36	(914)	1250	**RGS451S**	**RGS4510S**		1.4	(0.7)
(12 mm)	54	(1372)	42	(1067)	1500	**RGS541S**	**RGS5410S**	**RGS5411S**	1.6	(0.8)
	69	(1753)	57	(1448)	2000	**RGS691S**	**RGS6910S**	**RGS6911S**	2.1	(1.0)
	84	(2134)	72	(1829)	2500	**RGS841S**	**RGS8410S**	**RGS8411S**	2.5	(1.2)
	99	(2515)	87	(2210)	3000		**RGS9910S**	**RGS9911S**	3.0	(1.4)
	106	(2692)	90	(2286)	2778			**RGS10611S**	3.2	(1.5)
	132	(3353)	120	(3048)	4167		**RGS13210S**	**RGS13211S**	4.0	(1.8)
	144	(3658)	128	(3251)	3889			**RGS14411S**	4.3	(2.0)
	157	(3988)	145	(3683)	5000		**RGS15710S**	**RGS15711S**	4.7	(2.2)
Application: Air Heating										
30 W/in²	20	(508)	15	(381)	400		**RAN2010S**		0.2	(0.1)
0.260" Dia.	25	(635)	20	(508)	500		**RAN2510S**		0.3	(0.2)
Incoloy®	30	(762)	25	(635)	600		**RAN3010S**		0.3	(0.2)
(4.7 W/cm²)	35	(889)	30	(762)	800		**RAN3510S**		0.4	(0.2)
(6.6 mm)	40	(1016)	35	(889)	900		**RAN4010S**		0.4	(0.2)
	45	(1143)	40	(1016)	1000		**RAN4510S**		0.5	(0.3)
	50	(1270)	45	(1143)	1200		**RAN5010S**		0.5	(0.3)
	55	(1397)	50	(1270)	1200		**RAN5510S**		0.6	(0.3)
	60	(1524)	55	(1397)	1400		**RAN6010S**		0.6	(0.3)
	65	(1651)	60	(1524)	1600		**RAN6510S**		0.7	(0.4)
	70	(1778)	65	(1651)	1800		**RAN7010S**		0.7	(0.4)
	75	(1905)	70	(1778)	1800		**RAN7510S**		0.8	(0.4)
	80	(2032)	75	(1905)	2000		**RAN8010S**		0.8	(0.4)
30 W/in²	15	(381)	10	(254)	300		**RBN1510S**		0.2	(0.1)
0.315" Dia.	20	(508)	15	(381)	400		**RBN2010S**		0.3	(0.2)
Incoloy®	25	(635)	20	(508)	600		**RBN2510S**		0.4	(0.2)
(4.7 W/cm²)	30	(762)	25	(635)	800		**RBN3010S**		0.4	(0.2)
(8 mm)	35	(889)	30	(762)	900		**RBN3510S**		0.5	(0.3)
	40	(1016)	35	(889)	1000		**RBN4010S**		0.5	(0.3)
	45	(1143)	40	(1016)	1200		**RBN4510S**		0.6	(0.3)
	50	(1270)	45	(1143)	1400		**RBN5010S**		0.7	(0.4)
	55	(1397)	50	(1270)	1600		**RBN5510S**		0.7	(0.4)
	60	(1524)	55	(1397)	1800		**RBN6010S**		0.8	(0.4)
	65	(1651)	60	(1524)	1800		**RBN6510S**		0.8	(0.4)
	70	(1778)	65	(1651)	2000		**RBN7010S**		0.9	(0.5)
	75	(1905)	70	(1778)	2200		**RBN7510S**		1.0	(0.5)
	80	(2032)	75	(1905)	2400		**RBN8010S**		1.0	(0.5)
	90	(2286)	85	(2159)	2600		**RBN9010S**		1.2	(0.6)
	100	(2540)	95	(2413)	3000		**RBN10010S**		1.3	(0.6)

CONTINUED

All heating elements are Stock unless otherwise noted.
Availability
Stock: Same day shipment
Standard: Straight length, three weeks; formed with options, four weeks

Truck Shipment only

Tubular and Process Assemblies

WATROD Heating Elements

Double-Ended WATROD

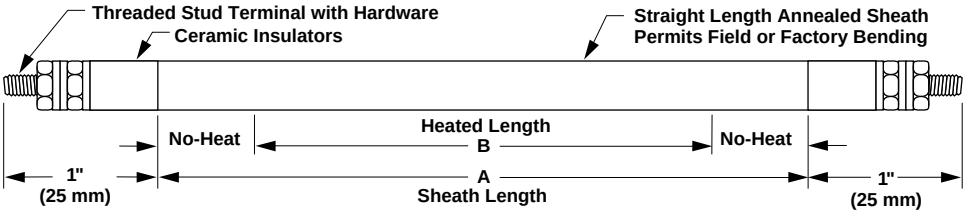

WATROD Description	Sheath A Dimension		Heated B Dimension		Watts	Code Number			Est. Net Weight	
	inch	(mm)	inch	(mm)		120V~(ac)	240V~(ac)	480V~(ac)	lbs	(kg)
Application: Air Heating										
30 W/in²	15	(381)	10	(254)	400		**RCN1510S**		0.3	(0.2)
0.430" Dia.	20	(508)	15	(381)	600		**RCN2010S**		0.4	(0.2)
Incoloy®	25	(635)	20	(508)	800		**RCN2510S**		0.5	(0.3)
(4.7 W/cm²)	30	(762)	25	(635)	1000		**RCN3010S**		0.6	(0.3)
(10.9 mm)	35	(889)	30	(762)	1200		**RCN3510S**		0.7	(0.4)
	40	(1016)	35	(889)	1400		**RCN4010S**		0.8	(0.4)
	48¾	(1238)	38¾	(984)	1500		**RCNX48N10S**	**RCNX48N11S**	1.0	(0.5)
	45	(1143)	40	(1016)	1600		**RCN4510S**		0.9	(0.5)
	50	(1270)	45	(1143)	1800		**RCN5010S**		1.0	(0.5)
	58¾	(1492)	48¾	(1238)	1917		**RCNX58N10S**	**RCNX58N11S**	1.1	(0.5)
	55	(1397)	50	(1270)	2000		**RCN5510S**		1.0	(0.5)
	60	(1524)	55	(1397)	2200		**RCN6010S**		1.1	(0.5)
	65	(1651)	60	(1524)	2400		**RCN6510S**		1.2	(0.6)
	73¾	(1873)	63¾	(1619)	2500			**RCNX73N11S**	1.4	(0.7)
	70	(1778)	65	(1651)	2600		**RCN7010S**		1.3	(0.6)
	75	(1905)	70	(1778)	2800		**RCN7510S**		1.4	(0.7)
	80	(2032)	75	(1905)	3000		**RCN8010S**		1.5	(0.7)
	91¾	(2330)	81¾	(2076)	3167			**RCNX91N11S**	1.7	(0.8)
	90	(2286)	85	(2159)	3500		**RCN9010S**		1.7	(0.8)
	100	(2540)	95	(2413)	4000		**RCN10010S**		1.9	(0.9)
	110	(2794)	105	(2667)	4500		**RCN11010S**		2.1	(1.0)
	120	(3048)	115	(2921)	5000		**RCN12010S**		2.3	(1.1)
Application: Radiant Heating										
40 W/in²	10¼	(260)	7¼	(184)	400	**RDN10E1S**			0.2	(0.1)
0.375" Dia.	16⅝	(422)	13⅜	(346)	650	**RDN16L1S**			0.3	(0.2)
Incoloy®	21 1/16	(535)	16 13/16	(427)	800	**RDN21B1S**	**RDN21B10S**		0.4	(0.2)
(6.2 W/cm²)	27⅛	(689)	22⅞	(581)	1100	**RDN27C1S**	**RDN27C10S**		0.5	(0.3)
(9.5 mm)	32⅛	(816)	27⅞	(708)	1300		**RDN32C10S**	**RDN32C11S**	0.6	(0.3)
	42⅞	(1089)	38⅝	(981)	1800		**RDN42R10S**	**RDN42R11S**	0.8	(0.4)
	57½	(1461)	53¼	(1353)	2500		**RDN57J10S**	**RDN57J11S**	1.1	(0.5)
	69¼	(1759)	65	(1651)	3000		**RDN69E10S**	**RDN69E11S**	1.3	(0.6)
	81¼	(2064)	77	(1956)	3600		**RDN81E10S**	**RDN81E11S**	1.6	(0.8)
	109¼	(2775)	105	(2667)	4000		**RDN109E10S**①		2.1	(1.0)
	134½	(3416)	127¾	(3245)	5000		**RDN134J10S**①		2.6	(1.2)
	153⅜	(3896)	145⅞	(3705)	5500		**RDN153R10S**①		2.9	(1.4)
	179¼	(4553)	171¼	(4350)	6500		**RDN179E10S**①		3.4	(1.6)

CONTINUED

All heating elements are Stock unless otherwise noted.
Availability
Stock: Same day shipment
Standard: Straight length, three weeks; formed with options, four weeks

① Standard

Truck Shipment only

Tubular and Process Assemblies

WATROD Heating Elements

Double-Ended WATROD

Special 208V~(ac) and 277V~(ac) Voltages

WATROD Description	Sheath A Dimension inch	Sheath A Dimension (mm)	Heated B Dimension inch	Heated B Dimension (mm)	Watts	Code Number 208V~(ac)	Code Number 277V~(ac)	Est. Net Weight lbs	Est. Net Weight (kg)
Application: Radiant Heating									
40 W/in²	21 1/16	(535)	16 13/16	(427)	800	**RDN21B2S①**	**RDN21B4S①**	0.4	(0.2)
0.375" Dia.	27 1/8	(689)	22 7/8	(581)	1100	**RDN27C2S①**	**RDN27C4S①**	0.5	(0.3)
Incoloy®	42 7/8	(1089)	38 5/8	(981)	1800	**RDN42R2S①**	**RDN42R4S①**	0.8	(0.4)
(6.2 W/cm²)	57 1/2	(1461)	53 1/4	(1353)	2500	**RDN57J2S①**	**RDN57J4S①**	1.1	(0.5)
(9.5 mm)	69 1/4	(1759)	65	(1651)	3000	**RDN69E2S①**	**RDN69E4S①**	1.3	(0.6)
	81 1/4	(2064)	77	(1956)	3600	**RDN81E2S①**	**RDN81E4S①**	1.6	(0.8)

WATROD Description	Sheath A Dimension inch	Sheath A Dimension (mm)	Heated B Dimension inch	Heated B Dimension (mm)	Watts	Code Number 120V~(ac)	Code Number 240V~(ac)	Code Number 480V~(ac)	Est. Net Weight lbs	Est. Net Weight (kg)
Application: Process Water										
48 W/in²	23	(584)	14	(356)	1000	**RGN231S**	**RGN2310S**	**RGN2311S**	0.7	(0.4)
0.475" Dia.	30	(762)	21	(533)	1500	**RGN301S**	**RGN3010S**	**RGN3011S**	0.9	(0.5)
Incoloy®	39	(991)	27	(686)	2000	**RGN391S**	**RGN3910S**	**RGN3911S**	1.2	(0.6)
(7.4 W/cm²)	44	(1118)	35	(889)	2500	**RGN441S**	**RGN4410S**	**RGN4411S**	1.3	(0.6)
(12 mm)	54	(1372)	42	(1067)	3000		**RGN5410S**	**RGN5411S**	1.6	(0.8)
	69	(1753)	57	(1448)	4000		**RGN6910S**	**RGN6911S**	2.1	(1.0)
	84	(2134)	72	(1829)	5000		**RGN8410S**	**RGN8411S**	2.5	(1.2)
	92	(2337)	76	(1930)	5556			**RGN9211S**	2.8	(1.3)
	99	(2515)	87	(2210)	6000		**RGN9910S**	**RGN9911S**	3.0	(1.4)
	149	(3785)	133	(3378)	9722			**RGN14911S**	4.5	(2.1)
Application: Hot Runner Molds (Manifolds)										
60 W/in²	35	(889)	25	(635)	1500		**RBR3510S**		0.2	(0.1)
0.315" Dia.	44	(1118)	34	(864)	2000		**RBR4410S**		0.3	(0.2)
316 SS	52	(1321)	42	(1067)	2500		**RBR5210S**		0.3	(0.2)
(9.3 W/cm²)	60	(1524)	50	(1270)	3000		**RBR6010S**		0.4	(0.2)
(8 mm)	69	(1753)	59	(1499)	3500		**RBR6910S**		0.4	(0.2)
	77	(1956)	67	(1702)	4000		**RBR7710S**		0.5	(0.3)
	85	(2159)	75	(1905)	4500		**RBR8510S**		0.6	(0.3)
Applications: Deionized Water, Demineralized Water										
60 W/in²	20	(508)	11	(279)	1000	**RGR201S**	**RGR2010S**	**RGR2011S**	0.6	(0.3)
0.475" Dia.	26	(660)	17	(432)	1500	**RGR261S**	**RGR2610S**	**RGR2611S**	0.8	(0.4)
316 SS	34	(864)	22	(559)	2000		**RGR3410S**	**RGR3411S**	1.0	(0.5)
(9.3 W/cm²)	40	(1016)	28	(711)	2500		**RGR4010S**	**RGR4011S**	1.2	(0.6)
(12 mm)	47	(1194)	31	(787)	2778			**RGR4711S**	1.4	(0.7)
	46	(1168)	34	(864)	3000		**RGR4610S**	**RGR4611S**	1.4	(0.7)
	57	(1448)	45	(1143)	4000		**RGR5710S**	**RGR5711S**	1.7	(0.8)
	68	(1727)	56	(1422)	5000		**RGR6810S**	**RGR6811S**	2.1	(1.0)
	79	(2007)	67	(1702)	6000		**RGR7910S**	**RGR7911S**	2.4	(1.1)
	105	(2667)	93	(2362)	8333			**RGR10511S**	3.2	(1.5)

CONTINUED

All heating elements are Stock unless otherwise noted.
Availability
Stock: Same day shipment
Standard: Straight length, three weeks; formed with options, four weeks

① Standard

Truck Shipment only.

Tubular and Process Assemblies

WATROD Heating Elements

Double-Ended WATROD

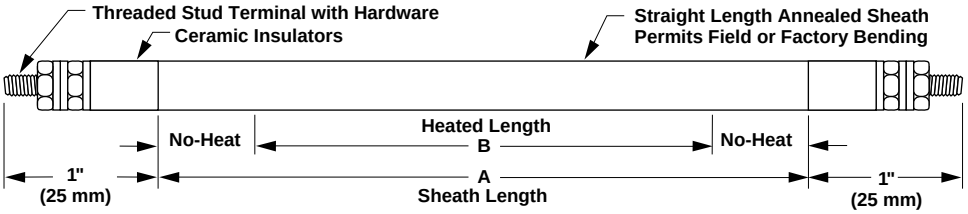

WATROD Description	Sheath A Dimension		Heated B Dimension		Watts	Code Number			Est. Net Weight	
	inch	(mm)	inch	(mm)		120V~(ac)	240V~(ac)	480V~(ac)	lbs	(kg)
Application: Clean Water										
60 W/in²	12	(305)	8	(203)	500	**RBC121S**	**RBC1210S**		0.2	(0.1)
0.315" Dia.	16	(406)	12	(305)	750	**RBC161S**	**RBC1610S**		0.2	(0.1)
Copper	19⅞	(505)	12⅞	(327)	750	**RBC19R1S**			0.3	(0.2)
(9.3 W/cm²)	20	(508)	16	(406)	1000	**RBC201S**	**RBC2010S**		0.3	(0.2)
(8 mm)	23¾	(603)	16¾	(425)	1000	**RBC23N1S**			0.3	(0.2)
	24	(610)	20	(508)	1250	**RBC241S**	**RBC2410S**		0.3	(0.2)
	27¾	(705)	20¾	(527)	1250	**RBC27N1S**			0.4	(0.2)
	33	(838)	26	(660)	1500	**RBC331S**	**RBC3310S**		0.5	(0.3)
	41	(1041)	34	(864)	2000	**RBC411S**	**RBC4110S**		0.6	(0.3)
	50	(1270)	43	(1092)	2500	**RBC501S②**	**RBC5010S②**		0.7	(0.4)
	58	(1473)	51	(1295)	3000	**RBC581S②**	**RBC5810S②**		0.8	(0.4)
	74	(1880)	67	(1702)	4000		**RBC7410S②**		1.0	(0.5)
60 W/in²	20	(508)	11	(279)	1000	**RGC201S**	**RGC2010S**		0.6	(0.3)
0.475" Dia.	26	(660)	17	(432)	1500	**RGC261S**	**RGC2610S**	**RGC2611S**	0.8	(0.4)
Copper	34	(864)	22	(559)	2000	**RGC341S**	**RGC3410S**	**RGC3411S**	1.0	(0.5)
(9.3 W/cm²)	40	(1016)	28	(711)	2500	**RGC401S**	**RGC4010S**	**RGC4011S**	1.2	(0.6)
(12 mm)	46	(1169)	34	(864)	3000		**RGC4610S②**	**RGC4611S②**	1.4	(0.7)
	47	(1194)	31	(787)	2778			**RGC4711S②**	1.4	(0.7)
	57	(1448)	45	(1143)	4000		**RGC5710S②**	**RGC5711S②**	1.7	(0.8)
	68	(1727)	56	(1422)	5000		**RGC6810S②**	**RGC6811S②**	2.1	(1.0)
	78	(1981)	62	(1575)	5556			**RGC7811S②**	2.4	(1.1)
	79	(2007)	67	(1702)	6000		**RGC7910S②**	**RGC7911S②**	2.4	(1.1)
	105	(2661)	93	(2362)	8333			**RGC10511S②**	3.2	(1.5)

All heating elements are Stock unless otherwise noted.
Availability
Stock: Same day shipment
Standard: Straight length, three weeks; formed with options, four weeks

② Stocked unannealed. Allow one day for annealing. Specify **DO NOT ANNEAL** if annealed WATROD not required.

Truck Shipment only

Tubular and Process Assemblies

WATROD Heating Elements

Single-Ended WATROD Application Hints

The single-ended WATROD heater's construction limits its usefulness in some applications. The following are some guides to follow when considering a single-ended WATROD.

- When single-ended termination simplifies application wiring.
- Your application requires lower wattage or a smaller package.
- Do not locate the end of the heated length within a bend, unless the radius is three inches (75 mm) or more. Field bending is not recommended.
- Bending is limited to bend Figures 1, 6, 22 and 28 (see **pages 282 to 286** for details).
- Ensure termination temperatures do not exceed 390°F (200°C) or the seal's maximum rating.
- Keep terminations clean, dry and tight.

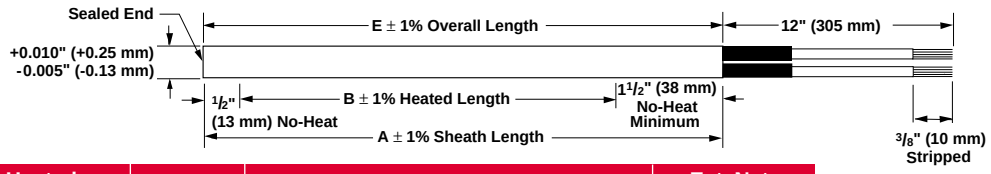

Single-Ended WATROD

WATROD Description	Sheath A Dimension inch	Sheath A Dimension (mm)	Heated B Dimension inch	Heated B Dimension (mm)	Watts	Code Number 120V~(ac)	Code Number 240V~(ac)	Est. Net Weight lbs	Est. Net Weight (kg)
Applications: Platen and Forced Air Heating, and Deicing									
20 W/in²	15	(381)	11½	(292)	270	**RSN151W**	**RSN1510W**	0.3	(0.2)
0.375" Dia.	20	(508)	16½	(419)	390	**RSN201W**	**RSN2010W**	0.4	(0.2)
Incoloy®	25	(635)	21½	(546)	500	**RSN251W**	**RSN2510W**	0.5	(0.3)
(3.1 W/cm²)	30	(762)	26½	(673)	625	**RSN301W**	**RSN3010W**	0.6	(0.3)
(9.5 mm)	35	(889)	31½	(800)	750	**RSN351W**	**RSN3510W**	0.7	(0.4)
	40	(1016)	36½	(927)	860	**RSN401W**	**RSN4010W**	0.8	(0.4)

All heating elements are Standard units.
Availability
Standard: Shipment within six weeks

F.O.B.: Hannibal, Missouri

How to Order

Single or Double-Ended WATROD

To order a stock, standard or assembly stock WATROD element, specify:

- Watlow code number
- Volts/watts
- Termination options
- Options
- Quantity

If stock WATROD heaters do not meet your application needs, Watlow can provide a made-to-order unit. Please specify:

- Description of application, including heated material, operating temperature and flow rate, etc.
- Volts/watts
- Sheath material/diameter
- Sheath length
- Single or double-ended
- Heated length
- No-heat length at each end
- Terminal pin length or termination options
- Moisture seal type
- Bend configuration, dimensions and critical tolerances (send drawing, if available)
- Options, including external finish and mounting method
- Quantity

Availability

Double-Ended WATROD

Straight Length Element

Stock: Same day shipment
Modified Stock①: Three to five working days
Standard: 10 working days
Made-to-Order: Three weeks

Formed Element

Modified Stock①: Five to seven working days
Standard: Three weeks
Made-to-Order: Four to five weeks

Single-Ended WATROD

Straight Length Element

Modified Stock①: Three weeks
Standard: Three weeks
Made-to-Order: Three weeks

Formed Element

Modified Stock①: Three weeks
Standard: Three weeks
Made-to-Order: Four to five weeks

Options, complexity and quantity may affect availability and lead times. Consult factory.

① Stock units with catalog options.

WATROD Heating Elements

Enclosure Heaters

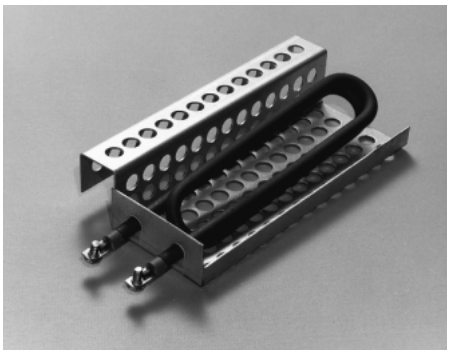

Designed to prevent freezing and condensation in electrical and mechanical housings, the WATROD element is enclosed in a perforated, aluminized-steel bracket.

Performance Capabilities

- Watt densities to 15 W/in² (2.3 W/cm²)
- Wattages to 1000 watts
- UL® and CSA component recognition to 250V~(ac)

Features and Benefits

- **Stainless steel sheath wall** further resists corrosion and protects the heating coil from exposure.
- **Silicone resin seal** provides protection against humid storage conditions and is effective to 390°F (200°C).
- **Perforated aluminized-steel mounting bracket** eases installation and helps prevent direct contact with the heating element.
- **Stock straight projection Type B #10-32 screw lug terminals** provide easy electrical connection.
- **Made-to-Order threaded stud**, quick connect and flexible lead wire termination options. See **page 281** for details.

Applications

- Control panels
- Traffic signal boxes
- Automatic teller machines
- Switch gear
- Electronic equipment

Application Hints

- Locate heater(s) in the lowest portion of the enclosure to maximize convection heating.
- Place thermostat(s) in the upper half of the enclosure, away from the heater(s).

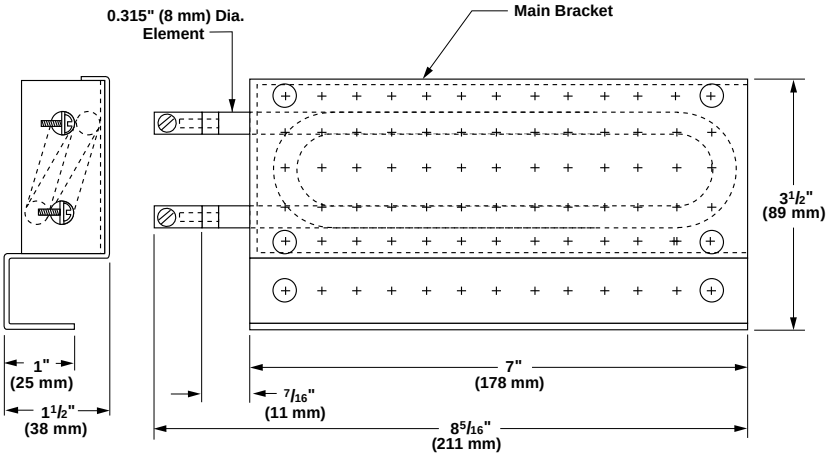

Watts	Watt Density W/in²	Watt Density (W/cm²)	Code No. 125V~(ac)	Code No. 250V~(ac)	Availability	Est. Net Weight lbs	Est. Net Weight (kg)
95	4	(0.6)	**EN951**		Stock	1.5	(0.7)
100	4	(0.6)		**EN10010**	Stock	1.5	(0.7)
250	10	(1.6)	**EN2501**	**EN25010**	Stock	1.5	(0.7)
375	15	(2.3)	**EN3751**	**EN37510**	Stock	1.5	(0.7)

F.O.B.: Hannibal, Missouri

How to Order

To order a stock WATROD enclosure heater, please specify:

- Watlow code number
- Volts/watts
- Termination options
- Options
- Quantity

If our stock units do not meet your application, Watlow can provide **made-to-order** enclosure heaters. Please specify:

- Volts/watts
- Sheath diameter/material
- No-heat section
- A, C, H, L and R dimensions per Figure 8 bend formation shown on catalog **page 283**.
- Termination options
- Options
- Quantity

Availability

Stock: Same day shipment

Modified Stock①: Three to five working days

Made-to-Order: Four to five weeks

Options, complexity and quantity may affect availability and lead times. Consult factory.

① Stock units with catalog options.

Tubular and Process Assemblies

F.O.B.: Hannibal, Missouri

WATROD Heating Elements

Plastics Application

Hot Runner Mold (Manifold)

Features and Benefits

- **Precise conformity to customer specifications** ensures easy installation—bending tolerances as low as ± 0.002 inch.
- **Common element diameters** include: 0.260, 0.315, 0.335, 0.375 and 0.430 inch (6.6, 8, 8.5, 9.5 and 10.9 mm).
- **Incoloy® sheath material** for high temperatures, 304 stainless steel for smaller radius bends.
- **Superior resistance coil design** produces even heating.
- **Threaded stud or leadwire termination** as required.

Use the *Milled Groove Sheath Watt Density and Groove Fit* chart to find the recommended watt density or tightest groove fit. Optimum groove fit, without heat transfer cement, can be determined by plotting the intersect point between the required sheath watt density and the Delta temperature (T). If the Delta T is not known, simply subtract the mold temperature from the maximum 1000°F (540°C) sheath temperature. Any combination of watt density and groove fit which results in a Delta T below the recommended maximum will maximize heater life. Conversely, if the Delta T is greater, less heater life can be expected.

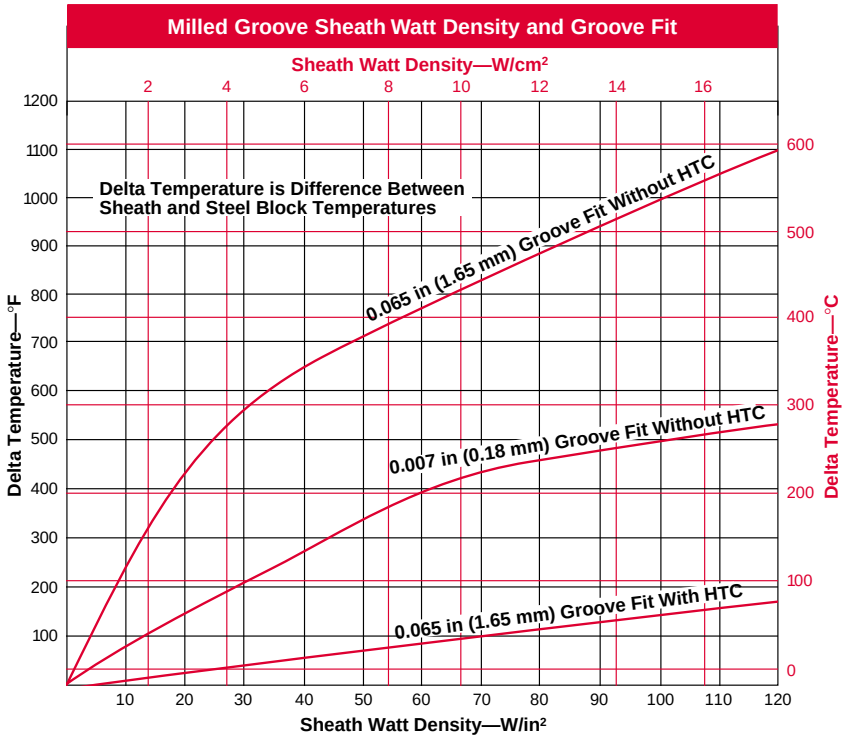

- Recommended maximum watt density = 40 to 70 W/in² (6.2 to 10.9 W/cm²)
- Recommended groove = 0.065 inch (1.65 mm) larger in diameter than sheath diameter, and use heat transfer cement.
- Recommended heater sheath diameter = 0.315 inch (8 mm)
- Recommended maximum Delta T = 400°F (205°C)
- Maximum sheath temperature = 1000°F (540°C)
- Recommended sheath material = Incoloy®

How to Order

All milled groove heaters are made-to-order. Due to precision forming requirements, please provide a detailed drawing or CAD disk. Consult your Watlow representative for price and shipment details. To help the ordering process, provide the following information:

- Operating temperature
- Volts/watts
- Sheath diameter and material
- No-heat section
- Electrical terminations
- Bend configurations and dimensions
- Groove cross section dimensions
- Quantity

Replacement Heaters

To order a replacement for an existing milled groove heater, specify original Watlow code number, or provide dimensions of the competitive heater, or the groove dimensions from the manifold.

Heat Transfer Cement (HTC)

Heat transfer cement can maximize heater performance and life by increasing thermal conductivity between the sheath and manifold. The maximum exposure temperature is 1250°F (675°C). Available in one quart cans. To order, specify **code number 148-15-2-1.**

Caution

Heat transfer cement conducts electricity. Avoid contact with terminations, wiring and other sources of electric current.

WATROD Heating Elements

Semiconductor Application

Sheath temperatures can vary up to a maximum sheath temperature of 1832°F (1000°C), with maximum watt densities up to 60 W/in^2. Individual element and assembly specifications vary depending on the application. Contact factory for E-beam welding, vacuum brazing and special plating.

Features and Benefits

- Operating temperatures to 1832°F (1000°C)
- Electrical isolation to a minimum of 10 teraohms, high isolation resistance heater only
- Vacuum compatibility to 10^{-9} Torr
- Nitrogen purge vacuum packaging
- Milled groove patterning to 0.25 inch (6.35 mm) radius
- Materials: stainless steel, Incoloy®, Inconel®, aluminum, nickel, copper
- Heated part assemblies: hot plates, vacuum fittings, special formed heaters
- Round elements from 0.210 to 0.475 inch (5.3 to 12.1 mm) diameter
- FIREBAR heating elements from 0.625 to 1.00 inch (15.9 to 25.4 mm) wide
- X-Ray capabilities and testing certification for ensured reliability.

Applications

- CVD
- PVD
- Etch
- Photolithography
- Annealing
- Wafer probers
- Flat panel display

External Finishes

- Black oxide
- Bright anneal
- Glass bead
- Belt polish
- Electropolish

ULTRAGARD Seal

A high temperature hermetic seal to 700°F (350°C).

For special plating, consult the factory.

Tubular and Process Assemblies

FIREBAR Heating Elements

FIREBAR® heating elements provide added heating performance over standard round tubular heating elements—especially for immersion applications in petroleum based liquids that require high kilowatts. The FIREBAR's unique flat surface geometry packs more power in shorter elements and assemblies, along with a host of other performance improvements. These include:

- Minimizing coking and fluid degrading
- Enhancing the flow of fluid past the element's surface to carry heat from the sheath
- Improving heat transfer with a significantly larger boundary layer that allows much more liquid to flow up and across the sheath's surface.

FIREBAR elements are available in single- and double-ended constructions with one inch or ⅝ inch heights. These two configuration variables make it possible to use FIREBAR elements instead of round tubular elements in virtually all applications.

FINBAR is a special version of the one inch, single-ended FIREBAR. FINBAR is specially modified with fins to further increase surface area for air and gas heating applications. Details are contained in the FINBAR section, starting on **page 318**.

Double-Ended Performance Capabilities

One Inch

- Watt densities to 120 W/in^2 (18.6 W/cm^2)
- Incoloy® sheath temperatures to 1400°F (760°C)
- 304 stainless steel sheath temperatures to 1200°F (650°C)
- Voltages to 480V~(ac)
- Amperages to 48 amps per heater or 16 amps per coil

⅝ Inch

- Watt densities to 90 W/in^2 (13.9 W/cm^2)
- Incoloy® sheath temperatures to 1400°F (760°C)
- Voltages to 480V~(ac)
- Amperages to 32 amps per heater or 16 amps per coil

Single-Ended Performance Capabilities

One Inch

- Watt densities to 60 W/in^2 (9.3 W/cm^2)
- Incoloy® sheath temperatures to 1400°F (760°C)
- 304 stainless steel sheath temperatures to 1200°F (650°C)
- Voltages to 480V~(ac)
- Amperages to 25 amps per heater.

⅝ Inch

- Watt densities to 80 W/in^2 (12.4 W/cm^2)
- Incoloy® sheath temperatures to 1400°F (760°C)
- Voltages to 480V~(ac)
- Amperages to 48 amps per heater or 16 amps per coil

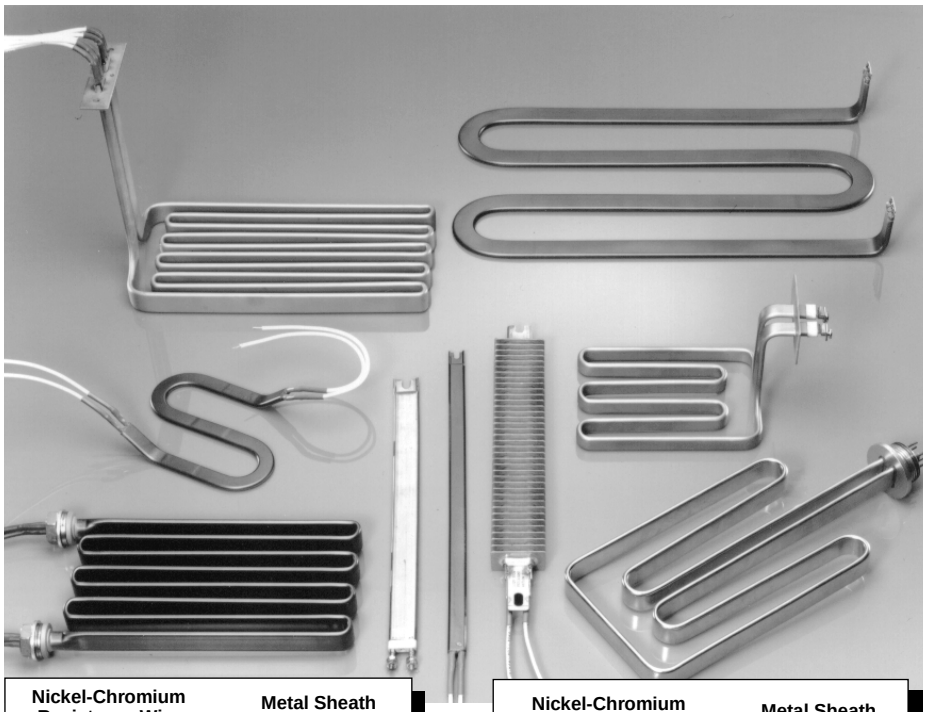

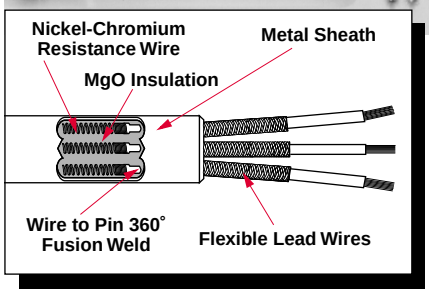

One Inch Double-Ended FIREBAR Element and Lead Configurations

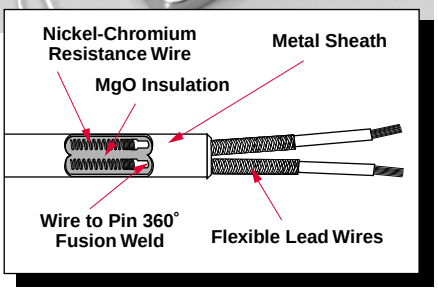

⅝ Inch Double-Ended FIREBAR Element and Lead Configurations

Incoloy® is a registered trademark of Special Metals Corporation.

FIREBAR Heating Elements

Specifications

	One Inch FIREBAR	⅝ Inch FIREBAR
		
Applications	Direct immersion; water, oils, etc. Clamp-on; hoppers, griddles Forced air heating (Also see FINBAR, page 318) Radiant heating	Direct immersion; water, oils, etc. Clamp-on; hoppers, griddles Forced air heating Radiant heating
Watt Density W/in² (W/cm²)	Stock: up to 90 (13.9) Made-to-Order (M-t-O): up to 120 (18.6)	Stock: up to 90 (13.9) Made-to-Order (M-t-O) up to 90 (13.9)
Surface Area Per Linear Inch (cm)	2.3 in² (14.8 cm²)	1.52 in² (9.80 cm²)
Cross Section Height ± 0.015/0.010" (0.381/0.254 mm) Thickness ± 0.005/0.001" (0.127/0.025 mm)	 1.010 (25.7) 0.235 (5.9)	 0.650 (16.5) 0.235 (5.9)
Sheath Material—Maximum Operating Temperature	Stock: Incoloy® 1400°F (760°C) M-t-O: Incoloy® 1400°F (760°C) 304 S. Steel 1200°F (650°C)	Stock: Incoloy® 1400°F (760°C) M-t-O: Incoloy® 1400°F (760°C) 304 S. Steel 1200°F (650°C)
Sheath Length inch (mm)	Stock: 15 to 114 (381 to 2896) M-t-O: 11 to 180 (280 to 4572)	Stock: 15 to 51 (381 to 1295) M-t-O: 11 to 115 (280 to 2920)
Straightness Tolerance Major axis inch/foot (cm/m): Minor axis inch/foot (cm/m):	 0.062 (0.52) 0.062 (0.52)	 0.062 (0.52) 0.062 (0.52)
No-Heat Length (Refer to page 279)	1" minimum, 12" maximum (25/305 mm)	1" minimum, 12" maximum (25/305 mm)
Maximum Voltage—Amperage	480V~(ac)—48 amps	480V~(ac)—32 amps
Maximum Hipotential	1960V~(ac)	1960V~(ac)
Maximum Current Leakage (cold)	2 milliamps	2 milliamps
Maximum Amperage Per Coil	16 amps	16 amps
Phase(s)	1-phase parallel/series, 3-phase delta/wye	1-phase parallel/series
Resistance Coils	3 or 2	2
Ohms/Inch/Unit①	0.270Ω minimum—2.833Ω maximum	0.040Ω minimum—4.250Ω maximum
Ohms/Inch/Coil①	0.080Ω minimum—8.500Ω maximum per coil	0.080Ω minimum—8.500Ω maximum per coil
Terminations	Flexible lead wires Quick connect (spade) Screw lug (plate) Threaded stud	Flexible lead wires Quick connect (spade) Screw lug (plate) Threaded stud
Seals	Stock: Lavacone 390°F (200°C) M-t-O: Ceramic base 2800°F (1535°C) RTV 500°F (260°C) Lavacone 390°F (200°C) Epoxy resin 250°F (120°C)	Stock: Lavacone 390°F (200°C) M-t-O: Ceramic base 2800°F (1535°C) RTV 500°F (260°C) Lavacone 390°F (200°C) Epoxy resin 250°F (120°C)
Minimum Axis Bending Radius inch (mm) (Do Not Field Bend)	Major: 1 (25) Minor: ½ (13) 90° bend Minor: 5/32 (4) 180° bend	Major: ¾ (19) Minor: ½ (13) 90° bend Minor: 5/32 (4) 180° bend
Mounting Options	Brackets (Type 1, 2 and 3) Threaded bulkhead or fitting	Brackets (Type 1, 2 and 3) Threaded bulkhead or fitting
Surface Finish Options	Bright Anneal, Passivation	Bright Anneal, Passivation
Optional Internal Thermocouple	ASTM Type K	—
Agency Recognition	UL® Component recognition to 480V~(ac) (file # E52951) CSA Component recognition to 480V~(ac) (file # 31388)	UL® Component recognition to 480V~(ac) (file # E52951) CSA Component recognition to 480V~(ac) (file # 31388)

① Resistance values valid for three coil 1 inch FIREBAR only.
UL® is a registered trademark of Underwriter's Laboratories, Inc.

Tubular and Process Assemblies

FIREBAR Heating Elements

Specifications

	One Inch Single-Ended FIREBAR	⅝ Inch Single-Ended FIREBAR
	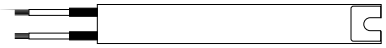	
Applications	Clamp-on; hoppers, griddles Forced or convection air heating (Also see FINBAR, page 318)	Clamp-on; hoppers, griddles Forced or convection air heating
Watt Density W/in² (W/cm²)	Stock: up to 40 (6.2) M-t-O: up to 60 (9.3)	Stock: up to 20 (3.1) M-t-O: up to 60 (12.4)
Surface Area Per Linear Inch (cm)	2.3 in² (14.8 cm²)	1.52 in² (9.80 cm²)
Cross Section		
Height ± 0.015/0.010" (0.381/0.254 mm)	1.010 (25.7)	0.650 (16.5)
Thickness ± 0.005/0.001" (0.127/0.025 mm)	0.235 (5.9)	0.235 (5.9)
Sheath Material—Maximum Operating Temperature	Stock: 304 S. Steel 1200°F (650°C) M-t-O: Incoloy® 1400°F (760°C) 304 S. Steel 1200°F (650°C)	Stock: Incoloy® 1400°F (760°C) M-t-O: Incoloy® 1400°F (760°C) 304 S. Steel 1200°F (650°C)
Sheath Length inch (mm)	Stock: 11 to 46 ¼ (280 to 1175) M-t-O: 11 to 120 (280 to 3048)	Stock: 11 ½ to 52 (280 to 1321) M-t-O: 11 to 116 (280 to 2946)
Straightness Tolerance		
Major axis inch/foot (cm/m):	0.062 (0.52)	0.062 (0.52)
Minor axis inch/foot (cm/m):	0.062 (0.52)	0.062 (0.52)
No-Heat Length (Refer to page 279)		
Top Cold End	1" min., 12" max. (25/305 mm)	1" min., 12" max. (25/305 mm)
Bottom (blunt end) Cold End	1 ph- 0.5 min., 2" max. (13/51 mm) 3 ph- 0.75 min., 2" max. (19/51 mm)	Only available at 1.25" N/A
Maximum Voltage—Amperage	480V~(ac)—48 amps	480V~(ac)—25 amps
Maximum Hipotential	1960V~(ac)	1960V~(ac)
Maximum Current Leakage (cold)	2 milliamps	2 milliamps
Maximum Amperage Per Coil	16 amps	16 amps
Phase(s)	1-phase, 3-phase wye	1-phase
Resistance Coils	3 or 1	1
Ohms/Inch/Unit	0.200Ω minimum—14.00Ω maximum①	0.200Ω minimum—14.00Ω maximum①
Terminations	Flexible lead wires Threaded stud Quick connect (spade) Screw lug (plate)	Flexible lead wires Quick connect (spade) Screw lug (plate)
Seals	Stock: Lavacone 392°F (200°C) M-t-O: Ceramic base 2800°F (1535°C) RTV 500°F (260°C) Lavacone 390°F (200°C) Epoxy resin 266/350°F (130/176°C)	Stock: Lavacone 392°F (200°C) M-t-O: Ceramic base 2800°F (1535°C) RTV 500°F (260°C) Lavacone 390°F (200°C) Epoxy resin 266/350°F (130/176°C)
Minimum Axis Bending Radius inch (mm) (Do Not Field Bend)	Major: 1 (25) Minor: ½ (13) 90° bend Minor: 5/32 (4) 180° bend	Major: ¾ (19) Minor: ½ (13) 90° bend Minor: 5/32 (4) 180° bend
Mounting Options	Bracket (Type 2) Threaded bulkhead	Bracket (Type 2) Threaded bulkhead
Surface Finish Options	Bright Anneal	Bright Anneal
Optional Internal Thermocouple	—	—
Single-end Configuration	Stock: Slotted M-t-O: Slotted, sealed or welded	Stock: Slotted M-t-O: Slotted, sealed or welded
Agency Recognition	UL® Component recognition to 480V~(ac) (file # E52951) CSA Component recognition to 480V~(ac) (file # 31388)	UL® Component recognition to 480V~(ac) (file # E52951) CSA Component recognition to 480V~(ac) (file # 31388)

① Based on 1-phase, single voltage heater.

FIREBAR Heating Elements

One inch Features and Benefits

Double-Ended

- **Streamline, 0.235 X 1.010 inch (5.9 X 25.6 mm) normal to flow dimension** reduces drag.
- **The 70 percent greater surface area per linear inch**, compared to a 0.430 inch (11 mm) diameter round tubular heater, reduces watt density or packs more kilowatts in smaller bundles.
- **Compacted MgO insulation** maximizes thermal conductivity and dielectric strength.
- **Nickel-chromium resistance wires** are precision wound.
- **The 0.040 inch (1 mm) thick MgO walls** more efficiently transfer heat away from the resistance wire to the sheath and media—conducts heat out of the element faster.
- **The 360° fusion welded wire-to-pin connection** ensures reliable electrical connection.
- **Three resistance coil design**, configurable to either one- or three-phase power, readily adapts to a variety of electrical sources and wattage outputs.
- **Lavacone seals** provide protection against humid storage conditions. Moisture retardant to 392°F (200°C).

Single-Ended

- **Single-ended termination** simplifies wiring and installation.
- **Streamline, 0.235 X 1.010 inch (5.9 X 25.6 mm) normal to flow dimension** reduces drag.
- **The 70 percent greater surface area per linear inch** reduces the watt density from that of the 0.430 inch (11 mm) diameter round tubular heater.
- **Slotted end** provides installation ease in clamp-on applications.
- **Lavacone seals** provide protection against humid storage conditions. Moisture retardant to 392°F (200°C).

⅝ inch Features and Benefits

Double-Ended

- **Special sheath dimensions, 0.235 X 0.650 inch (5.9 X 16.5 mm)**, result in a lower profile heater.
- **The 10 percent greater surface area per linear inch** reduce the watt density from that of the 0.430 inch (11 mm) diameter round tubular heater.
- **The 0.040 inch (1 mm) thick MgO walls** efficiently transfer heat away from the resistance wire to the heated media—conducts heat out of the element faster.
- **Lavacone seals** provide protection against humid storage conditions. Moisture retardant to 392°F (200°C).

Single-Ended

- **Single-ended termination** simplifies wiring and installation.
- **Special sheath dimensions**, **0.235 X 0.650 inch (5.9 X 16.5 mm)**, result in a lower profile heater for more wattage in a smaller package.
- **Slotted end** is supplied for installation ease in clamp-on applications.
- **Lavacone seals** provide protection against humid storage conditions. Moisture retardant to 392°F (200°C).

Tubular and Process Assemblies

FIREBAR Heating Elements

FIREBAR Performance Features

FIREBAR's flat tubular element geometry produces performance features and benefits not possible with traditional round tubular technology. The following describes how and why the FIREBAR is functionally superior for many applications—especially those requiring large wattage with low watt density.

By using the FIREBAR element you can:

- Lower the element's watt density
- Reduce element size and keep the same watt density
- Increase element life by reducing sheath temperature

Flat Shape Produces Lower Sheath Temperature

The FIREBAR element operates at a lower sheath temperature than a round tubular element of equal watt density because of three factors.

1) Flat Surface Geometry

FIREBAR's flat, vertical geometry is streamline. The liquid's flow past the heating element's surface is not impaired by back eddies inherent in the round tubular shape. The FIREBAR's streamline shape results in fluids flowing more freely with more heat carried away from the sheath.

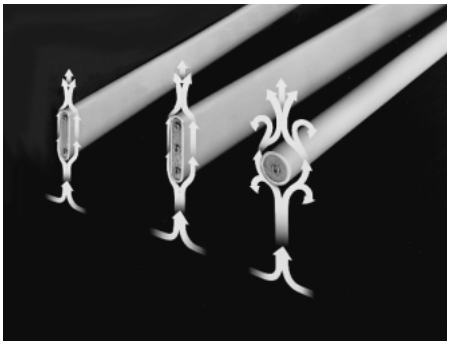

2) Normal to the Flow

The element's width (thickness) of both one inch and ⅝ inch FIREBAR elements is just 0.235 inch (5.9 mm). Compared to a 0.430 inch (11 mm) round tubular element, this relative thinness further reduces drag on liquids or gases flowing past the heater.

Comparative Widths

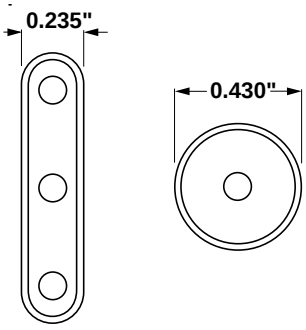

3) Buoyancy Force

The FIREBAR element's boundary layer, or vertical side, is greater than virtually all round tubular elements. This is 1.010 and 0.650 inches (25.6 and 16.5 mm) for the one inch and ⅝ inch FIREBARs respectively, compared to a 0.430 inch (11 mm) diameter on a round tubular element. The FIREBAR element's increased height, relative to flow, increases the buoyancy force in viscous liquids. This buoyancy force can be as much as 10 times greater depending on the FIREBAR element and liquid used.

Watt Density and Surface Area Advantages

The surface area per linear inch of a one inch FIREBAR is 70 percent greater than the 0.430 inch (11 mm) diameter round tubular element. And for the ⅝ inch FIREBAR it's nearly 10 percent greater.

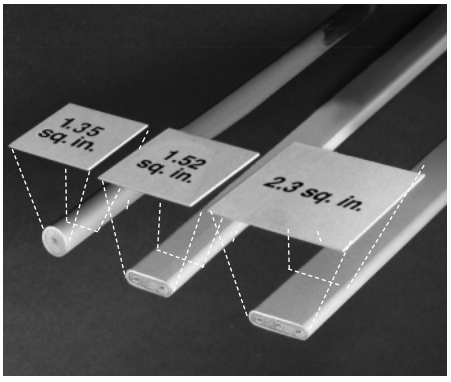

Element Type	Surface Area Per Linear inch (cm) in²	(cm²)
One inch FIREBAR	2.30 in²	(5.84 cm²)
⅝ inch FIREBAR	1.52 in²	(3.86 cm²)
0.430 inch Round	1.35 in²	(3.43 cm²)

Flat vs. Round Geometry Comparisons

The unique flat surface geometry of the FIREBAR element offers more versatility in solving heater problems than the conventional round tubular element. The following comparisons show how the FIREBAR element consistently outperforms round tubular heaters. FIREBAR elements can:

- Reduce coking and fluid degrading
- Increase heater power within application space parameters
- Provide superior heat transfer in clamp-on applications resulting from greater surface area contact
- Lower watt density

Reducing watt density or sheath temperature extends life. The FIREBAR element allows you to do either, without sacrificing equipment performance … as is proven by the accompanying *Heater Oil Test, Air Flow and Watt Density vs. Sheath Temperature* graphs.

FIREBAR Heating Elements

For example, the *FIREBAR Heater Oil Test* graph compares sheath temperatures of 40 W/in² (6.7 W/cm²) flat and round tubular elements. The FIREBAR element consistently operates at a lower sheath temperature than the round tubular element … even when light oils are tested at different temperatures. This reduces the chance that coking and fluid degradation will occur.

In fact, the FIREBAR element's sheath temperature at 40 W/in² (6.7 W/cm²) is lower than a 30 W/in² (4.6 W/cm²) round tubular element.

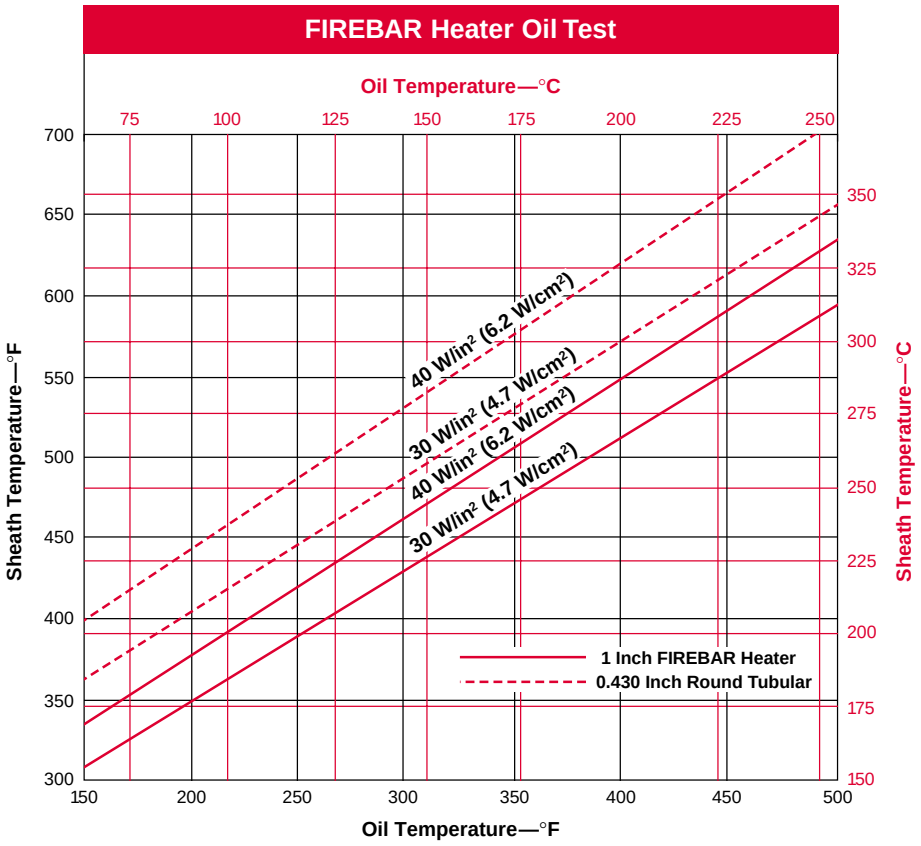

Heater Size and Power

The *Heater Size Comparison* chart shows, at the same wattage and watt density, the FIREBAR element is 38 percent shorter than a 0.430 inch (11 mm) round tubular element. The FIREBAR element requires less space in application and equipment designs.

The *Heater Power Comparison* chart demonstrates equal watt density, element length and increased total wattage for the FIREBAR element. The power in the FIREBAR element is 70 percent greater.

Heater Size Comparison

Element	Heated Length inches	(mm)	Wattage	W/in²	(W/cm²)
One inch FIREBAR Element	19⅞	(505)	1000	23	(3.6)
0.430 inch Round Tubular Element	32¼	(820)	1000	23	(3.6)

Heater Power Comparison

Element	Heated Length inches	(mm)	Wattage	W/in²	(W/cm²)
One inch FIREBAR Element	32¼	(820)	1700	23	(3.6)
0.430 inch Round Tubular Element	32¼	(820)	1000	23	(3.6)

Tubular and Process Assemblies

FIREBAR Heating Elements

Clamp-On Applications

Direct immersion in the liquid may not always be practical. In these instances the FIREBAR element can be clamped to a tank wall. Heat from the FIREBAR is conducted to the tank wall and into the media.

FIREBAR elements are also economical platen heaters. The *Platen Heating* graph shows FIREBAR's large, flat surface area allows it to operate at twice the watt density of round tubular elements … without sacrificing heater life.

Clamps should be placed approximately six inches (150 mm) apart and torqued down with 60 in-lbs (6.8 Newton meters).

Platen Heating (˚F)

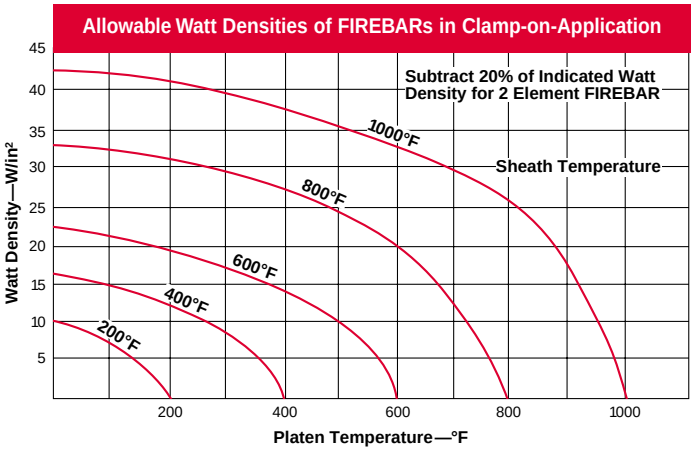

Platen Heating (˚C)

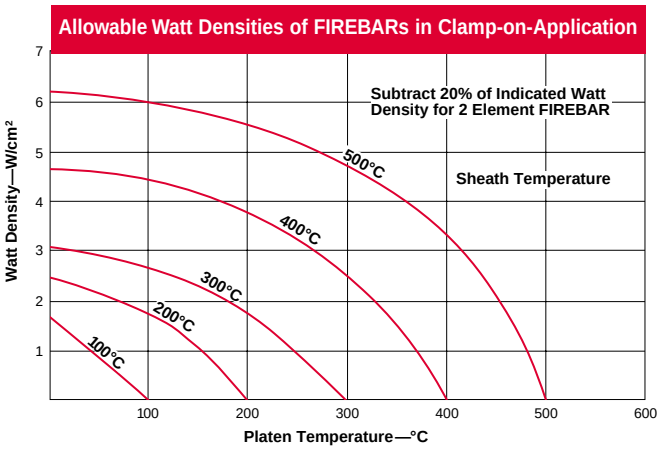

Watt Density Vs. Sheath Temperature

The *Watt Density vs. Sheath Temperature* graph features sheath temperature curves for commonly heated substances. A FIREBAR element's watt density will result in the sheath temperature shown at the intersecting point of its vertical watt density line and substance curve.

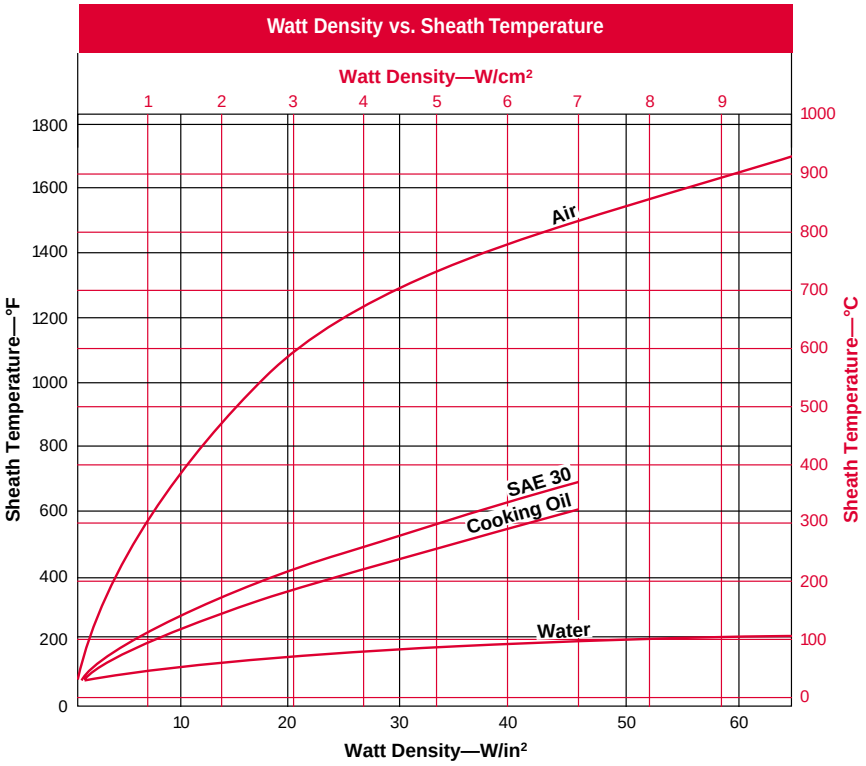

FIREBAR®

FIREBAR Heating Elements

Air Heating

The Air *Flow/Watt Density/Sheath Temperature* graph shows the relationship between air flow, watt density and sheath temperature. Keep in mind that lower sheath temperature yields longer heater life.

To use the *Air Flow* graph, determine the air flow in feet per second (or meters per second). Then follow the curve to find the recommended sheath temperature and watt density.

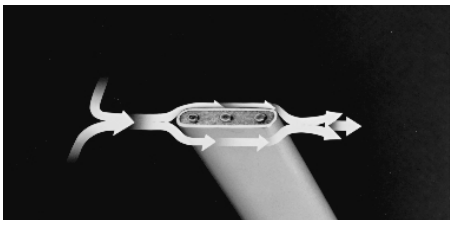

Air flow normal to sheath geometry

Air Flow/Watt Density/Sheath Temperature (°F)

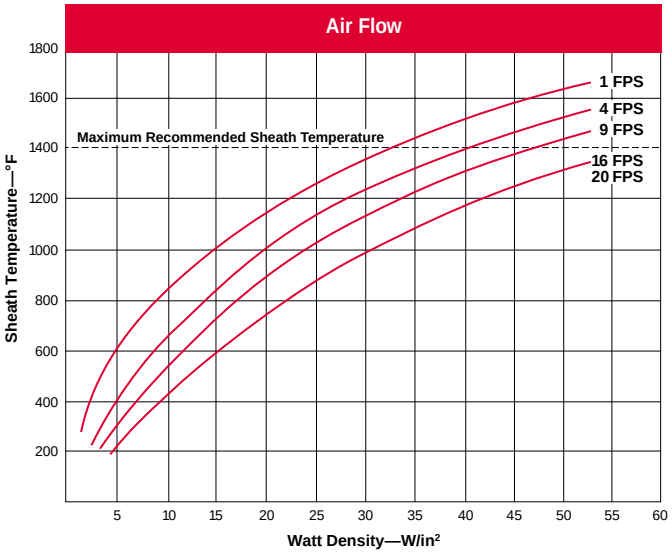

Air Flow/Watt Density/Sheath Temperature (°C)

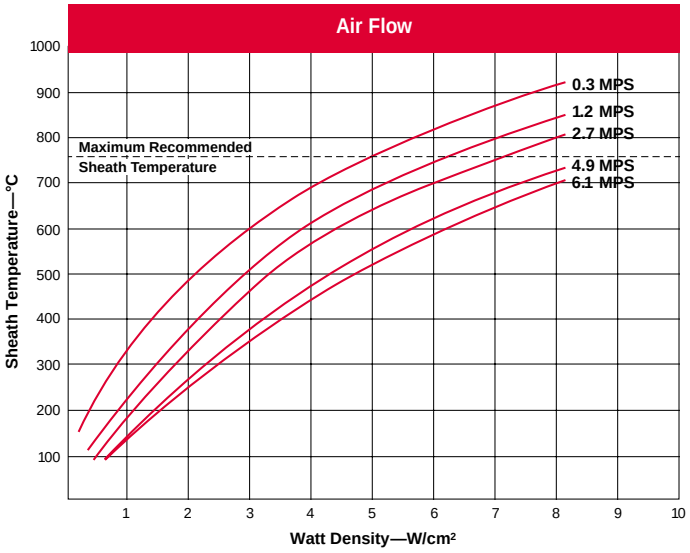

Moisture Resistant Seals

A standard lavacone seal is provided to prevent moisture and contaminants from entering the heater. Upon request, optional silicone rubber (RTV) and epoxy resin seals may be ordered.

Silicone Rubber (RTV) Seal

Silicone rubber (RTV) seals are ⅛ inch (3.2 mm) moisture barriers surrounding the terminal pins at the end of the sheath. Silicone rubber is effective to 500°F (260°C).

Epoxy Resin Seal

Epoxy resin seals are ⅛ inch (3.2 mm) moisture barriers surrounding the terminal pins at the end of the sheath. Epoxy resin is effective to 266°F (130°C) or 350°F (176°C), and recommended for water heating applications.

Application Hints

- Choose a FIREBAR heating element instead of an assembly, when your application requires lower wattages or smaller system packages.
- Keep terminations clean, dry and tight.
- Extend the heated section completely into the media being heated at all times to maximize heat transfer and heater life.
- Do not locate the end of the heated length within a bend, unless the radius is three inches (76 mm) or larger.
- Ensure termination temperatures do not exceed 392°F (200°C) or the maximum temperature rating of the end seal.

Tubular and Process Assemblies

FIREBAR Heating Elements

All FIREBAR heaters are available with a variety of termination options. Consult factory for availability.

Termination Code Legend

Termination Type

A = Silicone rubber insulation (Sil-A-Blend™) with fiberglass oversleeves. Rated to 392°F (200°C).
B = High-temperature TGGT insulation with fiberglass oversleeves. Rated to 480°F (250°C).
C = Nickel-plated steel quick connect.
D = Nickel-plated steel screw lug with ceramic insulator and plated steel screw
E = #10-32 nickel-plated steel threaded stud with plated steel nuts and washers.

Electrical Configuration

1 = 1-Phase parallel, 2 = 1-Phase series, 3 = 3-Phase delta, 4 = 3-Phase wye

Code No.	Termination	Phase	Wiring	1 Inch FIREBAR		5/8 inch FIREBAR	
				Dual Ended	S. End/FINBAR	Dual Ended	Single Ended
AI	Sil-A-Blend™ 200°C Lead wire	1	Parallel	Yes	Yes	Yes	Yes
A2	Sil-A-Blend™ 200°C Lead wire	1	Series	Yes	No	No	No
A3	Sil-A-Blend™ 200°C Lead wire	3	Delta	Yes	No	No	No
A4	Sil-A-Blend™ 200°C Lead wire	3	Wye	No	Yes	No	No
B1	TGGT 250°C Lead wire	1	Parallel	Yes	Yes	Yes	Yes
B2	TGGT 250°C Lead wire	1	Series	Yes	No	No	No
B3	TGGT 250°C Lead wire	3	Delta	Yes	No	No	No
B4	TGGT 250°C Lead wire	3	Wye	No	Yes	No	No
C1	¼" Quick Connect (Spade)	1	Parallel	Yes	Yes	Yes	Yes
C2	¼" Quick Connect (Spade)	1	Series	Yes	No	No	No
D1	Screw Lug (Plate) Terminal	1	Parallel	Yes	Yes	Yes	Yes
D2	Screw Lug (Plate) Terminal	1	Series	Yes	No	No	No
D3	Screw Lug (Plate) Terminal	3	Delta	Yes	No	No	No
E1	#10-32 Stud Terminal	1	Parallel	Yes	Yes	Yes	No
E2	#10-32 Stud Terminal	1	Series	Yes	No	No	No
E3	#10-32 Stud Terminal	3	Delta	Yes	No	No	No

Flexible Lead Wire①

A, B

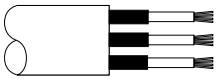

- Double End 1 inch FIREBAR
- Single End 1 inch FIREBAR
- FINBAR

A, B

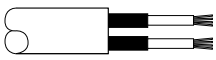

- Single End 1 inch FIREBAR
- Double End ⅝ inch FIREBAR
- Single End ⅝ inch FIREBAR
- FINBAR

Quick Connect (Spade)

C1

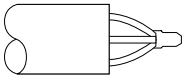

- Double End 1 inch FIREBAR

C2

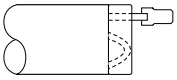

- Double End 1 inch FIREBAR

C3

- Single End 1 FIREBAR
- FINBAR

- Double End ⅝ inch FIREBAR
- Single End ⅝ inch FIREBAR

Screw Lug (Plate)

D1

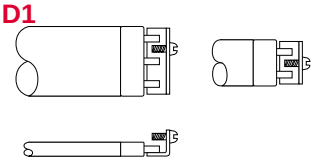

- Double End 1 & ⅝ inch FIREBAR

D2

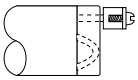

- Double End 1 inch FIREBAR

D3

- Double End 1 inch FIREBAR

3 Phase delta wiring example

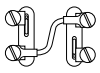

D4

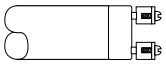

- Single End 1 inch FIREBAR
- FINBAR

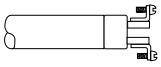

- Double End ⅝ inch FIREBAR
- Single End ⅝ inch FIREBAR

Threaded Stud

E1

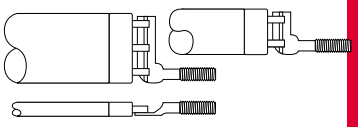

- Double End 1 & ⅝ inch FIREBAR

E2

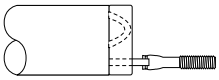

- Double End 1 inch FIREBAR

E3

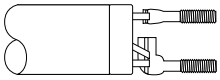

- Double End 1 inch FIREBAR

3 Phase delta wiring example

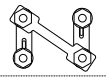

E4

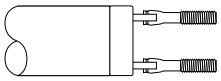

- Single End 1 inch FIREBAR
- FINBAR

① Flexible lead wires are 12 inches (305 mm) long unless otherwise specified.
Sil-A-Blend™ is a trademark of Radix Wire Company.

FIREBAR Heating Elements

Bending

Major and Minor Axis Bending Parameters

The following illustrations detail the recommended major and minor axis bend parameters for FIREBAR elements. These illustrations show the relationship between the type of bend and the location of heat and no-heat sections. See **pages 309 to 310** for the 15 common bend formations.

Note: Watlow does not recommend field bending FIREBAR elements. If the element must be bent in the field, please consult your Watlow representative for assistance.

180 degree Minor Axis Heated Bend

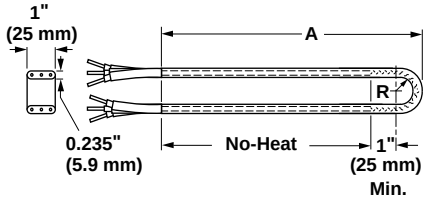

180 degree Major Axis Heated Bend

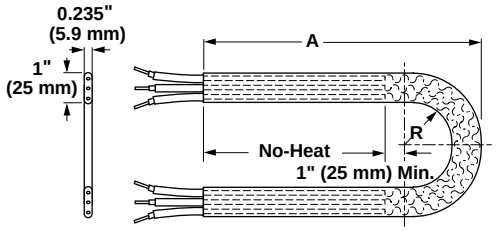

90 degree Minor Axis Heated Bend

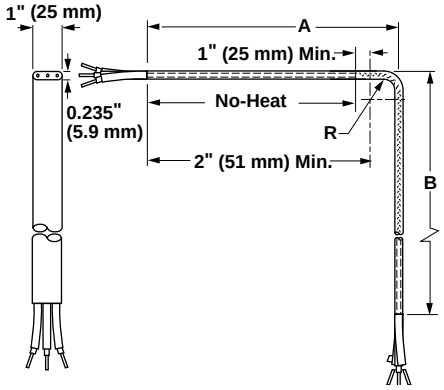

90 degree Major Axis Heated Bend

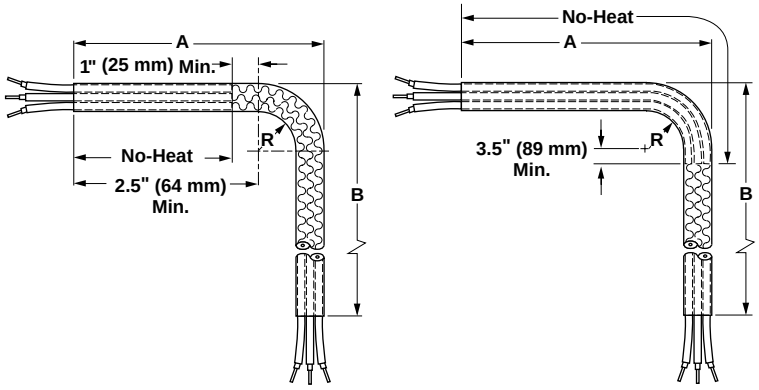

90 degree Minor Axis Un-Heated Bend

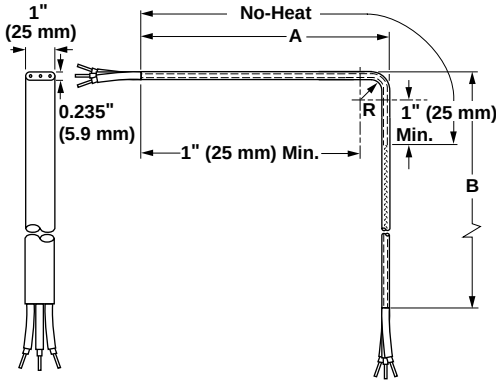

180 degree Major Axis Bends

FIREBAR Size		Radius		
inch	(mm)	inch	(mm)	Arc Length
⅝"	(16)	¾"	(19)	3.125
⅝"	(16)	1"	(25)	3.900
⅝"	(16)	1 ¼"	(32)	4.620
⅝"	(16)	1 ½"	(38)	5.600
1"	(25)	1"	(25)	4.335
1"	(25)	1 ¼"	(32)	5.121
1"	(25)	1 ½"	(38)	5.906

Tubular and Process Assemblies

FIREBAR Heating Elements

Bend Formations

FIREBAR elements can be formed into spirals, compounds, multi-axis and multi-plane configurations from 15 common bends. Custom bending with tighter tolerances can be made to meet specific application needs.

Formation is limited by bending parameters specified in the illustrations of major and minor axis bends on page 308. On these illustrations, please note the no-heat end location.

The no-heat end junction must be located a minimum of one inch (25 mm) from any bend. If these parameters are not followed, the heater may fail prematurely.

Illustrated on pages 309 to 310 are the 15 common bends that can be ordered for all in-stock and **made-to-order** FIREBAR heating elements.

To order a common bend, specify the **figure number** and **critical dimensions**.

Note: The alpha characters and symbols are used to designate specific dimensions within each illustration.

Minor Axis	Major Axis	Minor Axis	Major Axis
Figure 1A 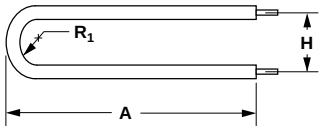	Figure 1B 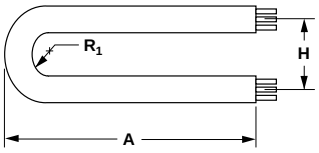	Figure 2A 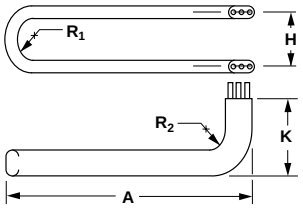	Figure 2B 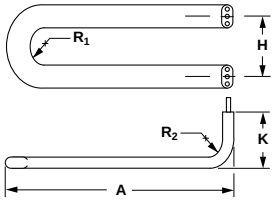
Figure 3A 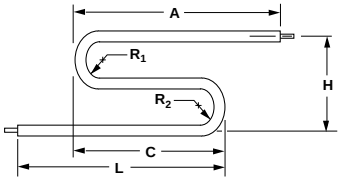	Figure 3B 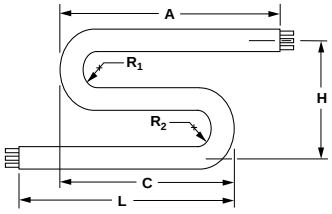	Figure 4A 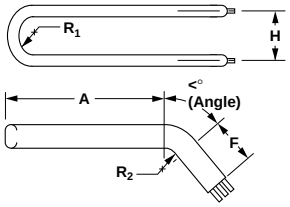	Figure 4B 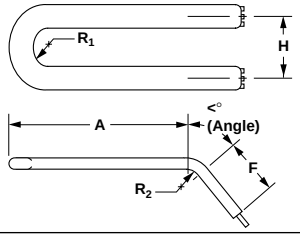
Figure 5A 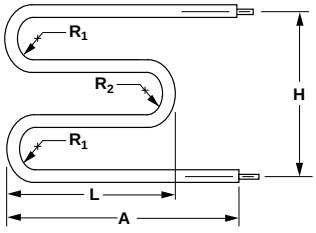	Figure 5B 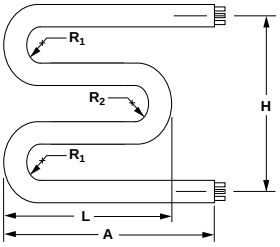	Figure 6A 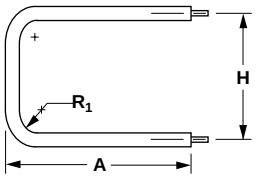	Figure 6B 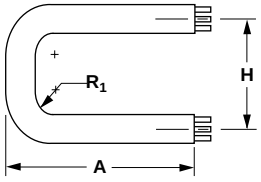
Figure 7A 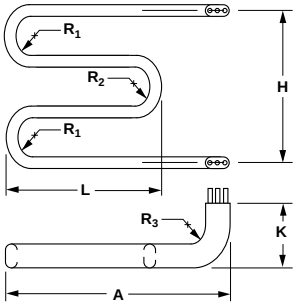	Figure 7B 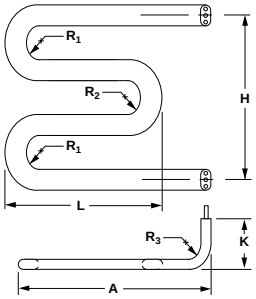	Figure 8A 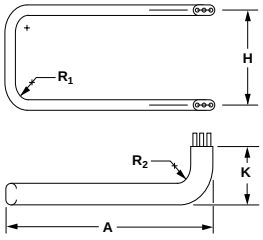	Figure 8B 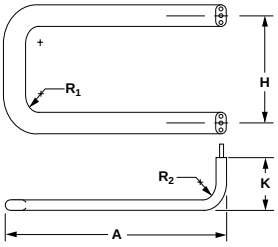

Tubular and Process Assemblies

FIREBAR Heating Elements

Minor Axis	Major Axis	Minor Axis	Major Axis
Figure 9A 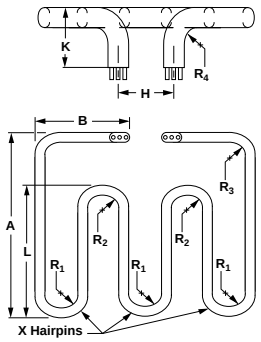 	**Figure 9B** 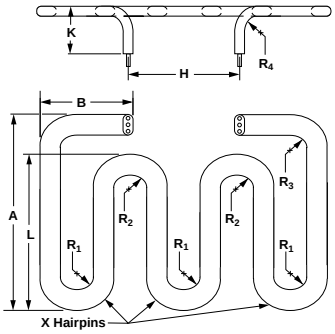 	**Figure 10A** 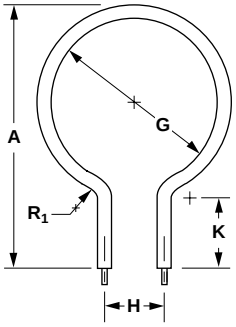 	Bend Figure 10B Not Available On Major Axis
Figure 11A 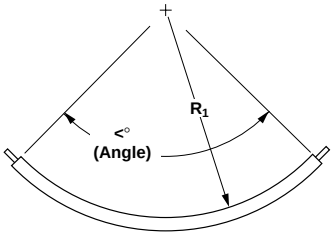 	Bend Figure 11B Not Available On Major Axis	**Figure 12A** 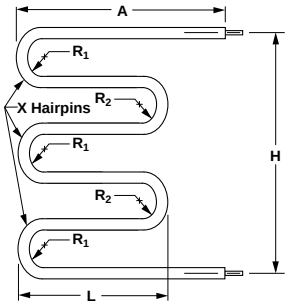 	**Figure 12B** 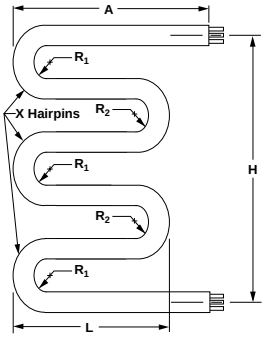
Figure 13A 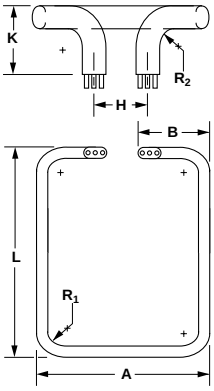 	**Figure 13B** 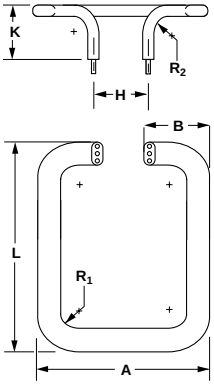 	**Figure 14A** 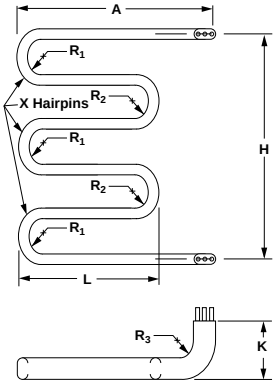 	**Figure 14B** 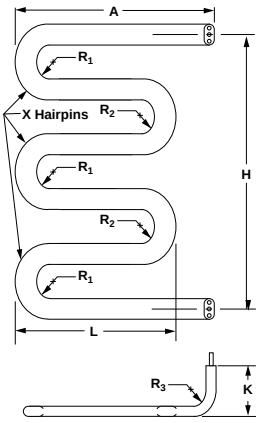
Figure 15A 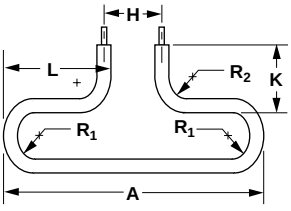 	**Figure 15B** 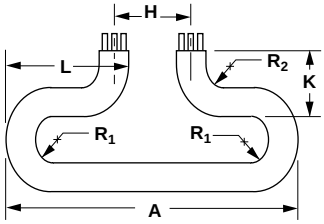 		

Tubular and Process Assemblies

FIREBAR Heating Elements

Mounting Brackets

Steel brackets provide element mounting in non-pressurized applications. In air heating applications, an 18 gauge aluminized steel bracket is press fitted to the element. A ¼ inch (6 mm) thick steel bracket is brazed or welded liquid-tight to the element for liquid heating. Upon request, stainless steel brackets can be provided. Special sizes also available.

The bracket is located ½ inch (13 mm) from the sheath's end, unless otherwise specified. Available on ⅝ inch FIREBAR as **made-to-order** only.

To order, specify **mounting bracket** as well as type, location, material and size.

Type 1

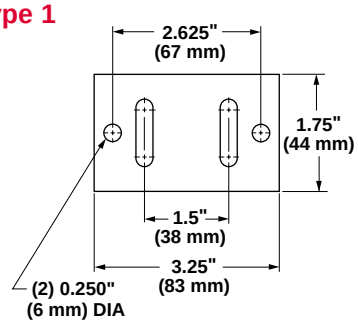

Type 2

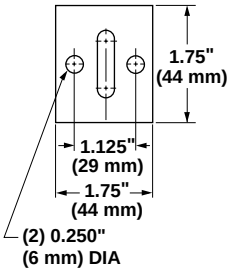

Type 3

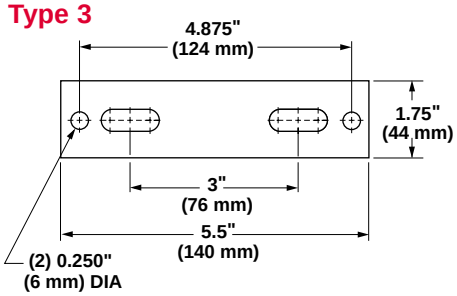

Threaded Bulkheads

A threaded stainless steel bushing with flange on the heater sheath provides rigid, leak-proof mounting through tank walls. A gasket, plated steel washer and hex nut are included.

To order, specify **threaded bulkheads**.

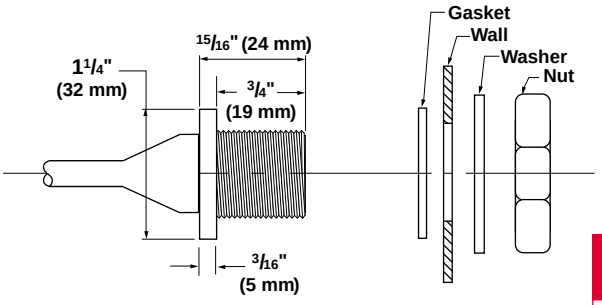

Illustration for 5/8 inch FIREBAR

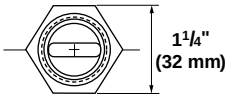

Illustration for one inch FIREBAR

Heater Size inch	(mm)	Thread Size
⅝"	(16)	⅞-14 UNF-2A
1"	(25)	¾-16 UNF-2A

Water-Tight Double Leg Threaded Fitting

A threaded 1⅝ inch-10 UNC stainless steel fitting with flange on the heater sheath provides rigid, leak-proof mounting through tank walls. This fitting allows both legs of the heater to pass through the same opening. A gasket, plated steel washer and hex nut are included. The threaded end of the bulkhead is mounted flush with the sheath's end, unless otherwise specified. Available on **one inch FIREBAR only**.

To order, specify **water-tight double leg threaded fitting**.

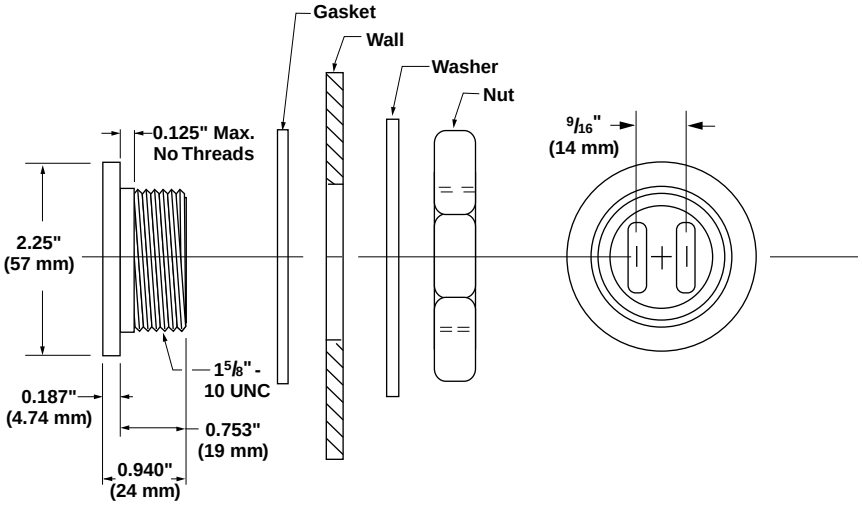

FIREBAR®

FIREBAR Heating Elements

Options

Continued

Surface Finish

Bright Annealing

A process that produces a smooth, metallic finish. It is a special annealed finish created in a non-oxidizing atmosphere. This finish is popular in the pharmaceutical and foodservice/beverage markets.

To order, specify **bright annealing**.

Passivation

During manufacturing, particles of iron or tool steel may be embedded in the stainless steel or alloy sheath. If not removed, these particles may corrode and produce rust spots. For critical sheath applications, passivation will remove free iron from the sheath.

To order, specify **passivation**.

Internal Thermocouples

To provide protection against element over-temperature conditions, one inch single- and double-ended FIREBAR elements can be ordered with ASTM **Type K** thermocouples. This is accomplished by eliminating the center resistance coil and embedding the thermocouple junction inside the sheath. Thus thermocouples are available only on two resistance coil, one inch FIREBAR elements.

To order, specify:

- **Type K** thermocouple
- Distance the junction is to be located from the element's end
- Lead length

Thermocouple Types

ASTM Type	Conductor Positive	Characteristics Negative	Recommended① Temperature Range °F	(°C)
K	Chromel® (Non-magnetic)	Alumel® (Magnetic)	0 to 2000	(-20 to 1100)

① **Type K** thermocouples are rated 32 to 2282°F (0 to 1250°C). Watlow does not recommend exceeding the temperature range shown on this chart.

Alumel® and Chromel® are registered trademarks of the Hoskins Manufacturing Company.

Tubular and Process Assemblies

F.O.B.: Hannibal, Missouri

FIREBAR Heating Elements

One Inch, Double Ended FIREBAR

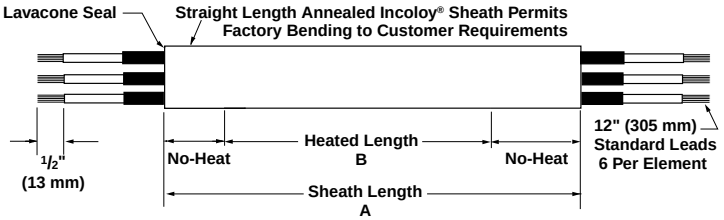

FIREBAR Description	Sheath A Dimension		Heated B Dimension		Watts	Code Number			Est. Net Weight	
	inch	(mm)	inch	(mm)		120V~(ac)	240V~(ac)	480V~(ac)	lbs	(kg)
Applications: Asphalt, Paraffin (Solid), Bunker Oil, Clamp-On										
6 W/in²	35	(889)	25	(635)	310	**FBN351WD**			1.3	(0.6)
Incoloy®	41	(1041)	31	(787)	410	**FBN411WD**			1.5	(0.7)
(1 W/cm²)	51	(1295)	41	(1041)	530	**FBN511WD**	**FBN5110WD**		1.9	(0.9)
	62	(1574)	52	(1320)	650	**FBN621WD**	**FBN6210WD**		2.3	(1.1)
	72	(1828)	62	(1574)	800	**FBN721WD**	**FBN7210WD**		2.6	(1.2)
	93	(2362)	83	(2108)	1060	**FBN931WD**	**FBN9310WD**		3.4	(1.6)
	114	(2895)	104	(2641)	1350	**FBN1141WD**	**FBN11410WD**		4.2	(1.9)
Applications: Griddles, Fuel Oil, Clamp-On										
10 W/in²	25	(635)	22	(558)	500	**FBN251WL**			0.9	(0.4)
Incoloy®	35	(889)	32	(812)	750	**FBN351WL**	**FBN3510WL**		1.3	(0.6)
(1.6 W/cm²)	47	(1193)	43	(1092)	1000	**FBN471WL**	**FBN4710WL**		1.7	(0.8)
	69	(1752)	65	(1651)	1500	**FBN691WL**	**FBN6910WL**		2.5	(1.2)
	90	(2286)	86	(2184)	2000	**FBN901WL**	**FBN9010WL**		3.3	(1.5)
Applications: Clamp-On, Medium Weight Oils, Liquid Paraffin, Low Temperature Ovens 400°F (205°C)										
15 W/in²②	29	(736)	19	(482)	670		**FBN2910WE**		1.1	(0.5)
Incoloy®	34	(863)	24	(609)	830		**FBN3410WE**		1.3	(0.6)
(2.3 W/cm²)	39	(990)	29	(736)	1000		**FBN3910WE**		1.4	(0.7)
	48	(1219)	38	(965)	1330		**FBN4810WE**	**FBN4811WE**	1.8	(0.9)
	58	(1473)	48	(1219)	1670		**FBN5810WE**	**FBN5811WE**	2.1	(1.0)
	68	(1727)	58	(1473)	2000		**FBN6810WE**	**FBN6811WE**	2.5	(1.2)
	87	(2209)	77	(1955)	2670		**FBN8710WE**	**FBN8711WE**	3.2	(1.5)
	106	(2692)	96	(2438)	3330		**FBN10610WE**	**FBN10611WE**	3.9	(1.8)
Applications: Radiant, Platens, Dies, Low Temperature Ovens 300°F (150°C)										
20 W/in²	15	(381)	11	(279)	500	**FBN151WM**			0.6	(0.3)
Incoloy®	20	(508)	16	(406)	750	**FBN201WM**			0.8	(0.4)
(3.1 W/cm²)	26	(660)	22	(558)	1000	**FBN261WM**	**FBN2610WM**		1.0	(0.5)
	36	(914)	32	(812)	1500	**FBN361WM**	**FBN3610WM**		1.3	(0.6)
	48	(1219)	43	(1092)	2000	**FBN481WM**	**FBN4810WM**		1.8	(0.9)
	70	(1778)	65	(1651)	3000		**FBN7010WM**	**FBN7011WM**	2.6	(1.2)
	91	(2311)	85	(2159)	4000		**FBN9110WM**	**FBN9111WM**	3.3	(1.5)
Applications: Degreasing Solutions, Heat Transfer Oils										
23 W/in²	35	(889)	25	(635)	1250	**FBN351WT**	**FBN3510WT**		1.3	(0.6)
Incoloy®	41	(1041)	31	(787)	1625	**FBN411WT**	**FBN4110WT**		1.5	(0.7)
(3.6 W/cm²)	51	(1295)	41	(1041)	2125	**FBN511WT**	**FBN5110WT**	**FBN5111WT**	1.9	(0.9)
	62	(1574)	52	(1320)	2625	**FBN621WT**	**FBN6210WT**	**FBN6211WT**	2.3	(1.1)
	72	(1828)	62	(1574)	3200	**FBN721WT**	**FBN7210WT**	**FBN7211WT**	2.6	(1.2)
	93	(2362)	83	(2108)	4250	**FBN931WT**	**FBN9310WT**	**FBN9311WT**	3.4	(1.6)
	114	(2895)	104	(2641)	5400	**FBN1141WT**	**FBN11410WT**	**FBN11411WT**	4.2	(1.9)

CONTINUED

All heating elements are Stock units unless otherwise noted.

Availability
Stock: Same day shipment
Standard: 10 working days

② Standard

Truck Shipment only

Tubular and Process Assemblies

FIREBAR Heating Elements

One Inch, Double Ended FIREBAR

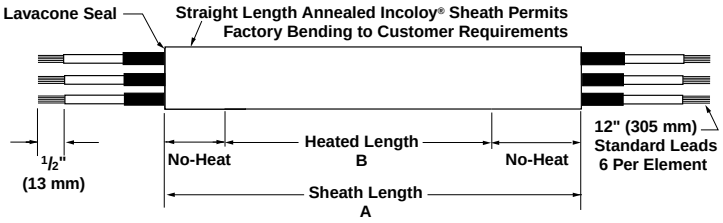

FIREBAR Description	Sheath A Dimension		Heated B Dimension		Watts	Code Number			Est. Net Weight	
	inch	(mm)	inch	(mm)		120V~(ac)	240V~(ac)	480V~(ac)	lbs	(kg)
Applications: Cooking Oils, Mild Caustic Solution, Ethylene Glycol (100%)										
30 W/in²	16	(406)	10	(254)	750	**FBN161WH**			0.6	(0.3)
Incoloy®	20	(508)	14	(355)	1000	**FBN201WH**			0.8	(0.4)
(4.7 W/cm²)	27	(685)	21	(533)	1500	**FBN271WH**	**FBN2710WH**		1.0	(0.5)
	34	(863)	28	(711)	2000	**FBN341WH**	**FBN3410WH**		1.3	(0.6)
	50	(1270)	43	(1092)	3000		**FBN5010WH**	**FBN5011WH**	1.8	(0.9)
	64	(1625)	57	(1447)	4000		**FBN6410WH**	**FBN6411WH**	2.4	(1.1)
	80	(2032)	72	(1828)	5000		**FBN8010WH**	**FBN8011WH**	2.9	(1.4)
Applications: Process Water, Ethylene Glycol (50%)										
40 W/in²	25	(635)	22	(558)	2000		**FBN2510WK**		0.9	(0.4)
Incoloy®	35	(889)	32	(812)	3000		**FBN3510WK**	**FBN3511WK**	1.3	(0.6)
(6.2 W/cm²)	47	(1193)	43	(1092)	4000		**FBN4710WK**	**FBN4711WK**	1.7	(0.8)
	69	(1752)	65	(1651)	6000		**FBN6910WK**	**FBN6911WK**	2.5	(1.2)
	90	(2286)	86	(2184)	8000		**FBN9010WK**	**FBN9011WK**	3.3	(1.5)
45 W/in²	29	(736)	19	(482)	2000		**FBN2910WP**		1.1	(0.5)
Incoloy®	34	(863)	24	(609)	2500		**FBN3410WP**		1.3	(0.6)
(7 W/cm²)	39	(990)	29	(736)	3000		**FBN3910WP**		1.4	(0.7)
	48	(1219)	38	(965)	4000		**FBN4810WP**	**FBN4811WP**	1.8	(0.9)
	58	(1473)	48	(1219)	5000		**FBN5810WP**	**FBN5811WP**	2.1	(1.0)
	68	(1727)	58	(1473)	6000		**FBN6810WP**	**FBN6811WP**	2.5	(1.2)
	87	(2209)	77	(1955)	8000		**FBN8710WP**	**FBN8711WP**	3.2	(1.5)
	106	(2692)	96	(2438)	10,000		**FBN10610WP**	**FBN10611WP**	3.9	(1.8)
Applications: Clean and Potable Water										
80 W/in²	15	(381)	11	(279)	2000		**FBN1510WJ**		0.6	(0.3)
Incoloy®	20	(508)	16	(406)	3000		**FBN2010WJ**		0.8	(0.4)
(12.4 W/cm²)	26	(660)	22	(558)	4000		**FBN2610WJ**	**FBN2611WJ**	1.0	(0.5)
	36	(914)	32	(812)	6000		**FBN3610WJ**	**FBN3611WJ**	1.3	(0.6)
	48	(1219)	43	(1092)	8000		**FBN4810WJ**	**FBN4811WJ**	1.8	(0.9)
	70	(1778)	65	(1651)	12,000			**FBN7011WJ**	2.6	(1.2)
	91	(2311)	85	(2159)	16,000			**FBN9111WJ**	3.3	(1.5)
90 W/in²	35	(889)	25	(635)	5000	**FBN351WG**	**FBN3510WG**	**FBN3511WG**	1.3	(0.6)
Incoloy®	41	(1041)	31	(787)	6500	**FBN411WG**①	**FBN4110WG**	**FBN4111WG**	1.5	(0.7)
(14 W/cm²)	51	(1295)	41	(1041)	8500		**FBN5110WG**	**FBN5111WG**	1.9	(0.9)
	62	(1574)	52	(1320)	10,500		**FBN6210WG**	**FBN6211WG**	2.3	(1.1)
	72	(1828)	62	(1574)	12,750		**FBN7210WG**	**FBN7211WG**	2.6	(1.2)
	93	(2362)	83	(2108)	17,000			**FBN931WG**	3.4	(1.6)
	114	(2895)	104	(2641)	21,5000			**FBN11411WG**	3.4	(1.6)

All heating elements are Stock units unless otherwise noted.

Availability
Stock: Same day shipment
Standard: 10 working days

① Standard

Truck Shipment only

Tubular and Process Assemblies

FIREBAR Heating Elements

⅝ Inch, Double Ended FIREBAR

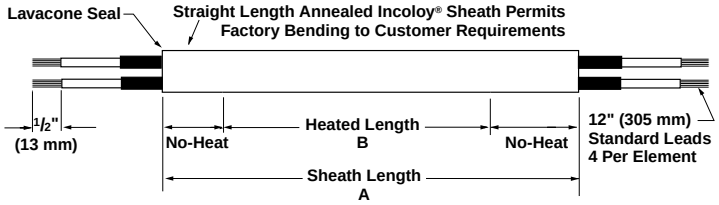

FIREBAR Description	Sheath A Dimension		Heated B Dimension		Watts	Code Number			Est. Net Weight	
	inch	(mm)	inch	(mm)		120V~(ac)	240V~(ac)	480V~(ac)	lbs	(kg)
Applications: Degreasing Fluids, Heat Transfer Oils										
23 W/in² ②	19	(483)	11	(279)	375	**FAN191WT**			0.5	(0.3)
Incoloy®	22	(559)	14	(356)	500	**FAN221WT**	**FAN2210WT**		0.5	(0.3)
(3.6 W/cm²)	26	(660)	18	(457)	625	**FAN261WT**	**FAN2610WT**		0.6	(0.3)
	30	(762)	22	(559)	750	**FAN301WT**	**FAN3010WT**		0.7	(0.4)
	37	(940)	29	(737)	1000	**FAN371WT**	**FAN3710WT**		0.9	(0.5)
	44	(1118)	36	(914)	1250	**FAN441WT**	**FAN4410WT**		1.0	(0.5)
	51	(1295)	43	(1092)	1500	**FAN511WT**	**FAN5110WT**		1.2	(0.6)
Applications: Clean and Potable Water										
90 W/in²	15	(381)	7	(178)	1000	**FAN151WG**②	**FAN1510WG**		0.4	(0.2)
Incoloy®	19	(483)	11	(279)	1500	**FAN191WG**	**FAN1910WG**②	**FAN1911WG**	0.5	(0.3)
(14 W/cm²)	22	(559)	14	(356)	2000	**FAN221WG**	**FAN2210WG**②	**FAN2211WG**	0.5	(0.3)
	26	(660)	18	(457)	2500	**FAN261WG**	**FAN2610WG**②	**FAN2611WG**	0.6	(0.3)
	30	(762)	22	(559)	3000	**FAN301WG**②	**FAN3010WG**②	**FAN3011WG**	0.7	(0.4)
	37	(940)	29	(737)	4000		**FAN3710WG**②	**FAN3711WG**	0.9	(0.5)
	44	(1118)	36	(914)	5000		**FAN4410WG**②	**FAN4411WG**	1.0	(0.5)
	51	(1295)	43	(1092)	6000		**FAN5110WG**②	**FAN5111WG**	1.2	(0.6)

All heating elements are Stock units.
Availability
Stock: Same day shipment
Standard: 10 working days

② Stock

Tubular and Process Assemblies

FIREBAR Heating Elements

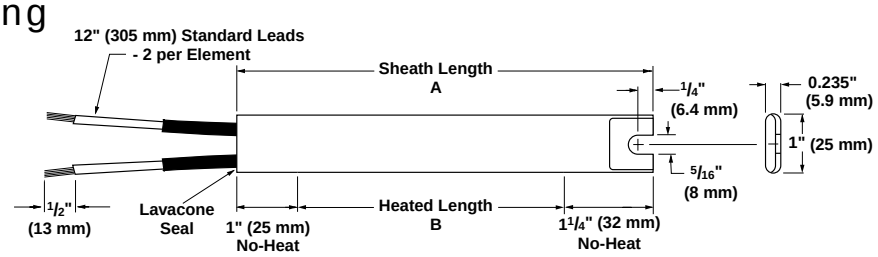

One Inch, Single Ended FIREBAR

FIREBAR Description	Sheath A Dimension inch	(mm)	Heated B Dimension inch	(mm)	Watts	Code Number 120V~(ac)	Code Number 240V~(ac)	Est. Net Weight lbs	(kg)
Applications: Radiant, Platens, Dies, Low Temperature Ovens 300°F (150°C)									
20 W/in²	8¾	(222)	6½	(165)	300	**FSP91WM**		0.4	(0.2)
304 SS	10¼	(260)	7½	(203)	375	**FSP101WM**		0.4	(0.2)
(3.1 W/cm²)	12¼	(311)	10	(254)	450	**FSP121WM**		0.5	(0.3)
	13½	(342)	11¼	(285)	500	**FSP141WM**		0.5	(0.3)
	16⅛	(408)	13⅞	(352)	650	**FSP161WM**	**FSP1610WM**	0.6	(0.3)
	17¾	(450)	15½	(393)	725	**FSP181WM**	**FSP1810WM**	0.7	(0.4)
	19¼	(489)	17	(431)	800	**FSP191WM**	**FSP1910WM**	0.7	(0.4)
	22	(558)	19¾	(501)	900	**FSP221WM**	**FSP2210WM**	0.8	(0.4)
	23¾	(603)	21½	(546)	1000	**FSP241WM**	**FSP2410WM**	0.9	(0.4)
	25	(635)	22¾	(577)	1050	**FSP251WM**	**FSP2510WM**	0.9	(0.4)
	28⅝	(727)	26⅜	(669)	1250	**FSP291WM**	**FSP2910WM**	1.1	(0.5)
	31⅝	(803)	29⅜	(746)	1350	**FSP321WM**	**FSP3210WM**	1.2	(0.6)
	34⅛	(865)	31⅞	(809)	1500		**FSP3410WM**	1.3	(0.6)
	36⅞	(936)	34⅝	(879)	1600		**FSP3710WM**	1.4	(0.7)
	40⅝	(1031)	38⅜	(974)	1800		**FSP4110WM**	1.5	(0.7)
	46¼	(1174)	44	(1117)	2000		**FSP4610WM**	1.7	(0.8)
Applications: Process Water, Ethylene Glycol (50%)									
40 W/in²	8¾	(222)	6½	(165)	600	**FSP91WK**		0.4	(0.2)
304 SS	10¼	(260)	7½	(203)	750	**FSP101WK**		0.4	(0.2)
(6.2 W/cm²)	12¼	(311)	10	(254)	900	**FSP121WK**	**FSP1210WK**	0.5	(0.3)
	13½	(342)	11¼	(285)	1000	**FSP131WK**	**FSP1310WK**	0.5	(0.3)
	16¼	(408)	13⅞	(352)	1300	**FSP161WK**	**FSP1610WK**	0.6	(0.3)
	17¾	(450)	15½	(393)	1450	**FSP181WK**	**FSP1810WK**	0.7	(0.4)
	19¼	(489)	17	(431)	1600		**FSP1910WK**	0.7	(0.4)
	22	(558)	19¾	(501)	1800		**FSP2210WK**	0.8	(0.4)
	23¾	(603)	21½	(546)	2000		**FSP2410WK**	0.9	(0.4)
	25	(635)	22¾	(577)	2100		**FSP2510WK**	0.9	(0.4)
	28⅝	(727)	26⅜	(669)	2500		**FSP2910WK**	1.1	(0.5)
	31⅝	(803)	29⅜	(746)	2700		**FSP3210WK**	1.2	(0.6)
	34⅛	(865)	31⅞	(809)	3000		**FSP3410WK**	1.3	(0.6)
	36⅞	(936)	34⅝	(879)	3200		**FSP3710WK**	1.4	(0.7)
	40⅝	(1031)	38⅜	(974)	3600		**FSP4110WK**	1.5	(0.7)
	46¼	(1174)	44	(1117)	4000		**FSP4610WK**	1.7	(0.8)

All heating elements are Stock units.
Availability
Stock: Same day shipment

Tubular and Process Assemblies

FIREBAR Heating Elements

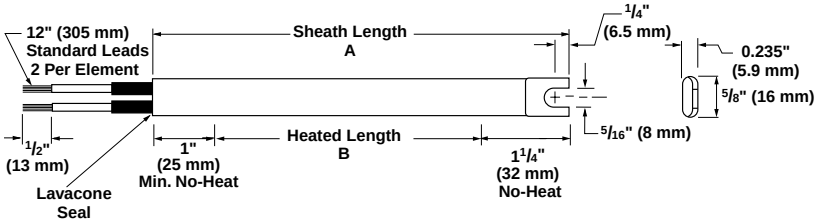

⅝ Inch, Single Ended FIREBAR

FIREBAR Description	Sheath A Dimension		Heated B Dimension		Watts	Code Number		Est. Net Weight	
	inch	(mm)	inch	(mm)		120V~(ac)	240V~(ac)	lbs	(kg)
Applications: Radiant, Platens, Dies, Low Temperature Ovens 300°F (150°C)									
20 W/in²	11½	(292)	8	(203)	250	**FSA121WM①**		0.3	(0.2)
Incoloy®	15½	(394)	12	(304)	375	**FSA161WM**	**FSA1610WM**	0.4	(0.2)
(3.1 W/cm²)	19½	(495)	16	(406)	500	**FSA201WM**	**FSA2010WM①**	0.5	(0.3)
	28	(711)	24	(609)	750	**FSA281WM①**	**FSA2810WM①**	0.6	(0.3)
	36	(914)	32	(812)	1000	**FSA361WM**	**FSA3610WM**	0.8	(0.4)
	52	(1321)	48	(1219)	1500	**FSA521WM**	**FSA5210WM①**	1.2	(0.6)

Availability
Stock: Same day shipment
Standard: 10 working days
① Stock

F.O.B.: Hannibal, Missouri

How to Order

To order a stock FIREBAR heating element, specify:

- Watlow code number
- Size (one or ⅝ inch)
- Type (single- or double-ended)
- Volts/watts
- Termination options
- Options
- Quantity

If our stock units do not meet your application needs, Watlow can provide a **made-to-order** unit, please specify:

- Type of application, including heated material, operating temperature, etc.
- Size (one or ⅝ inch)
- Type (single- or double-ended)
- Volts/watts
- Sheath length and material
- Heated length
- No-heat length
- Terminal pin length or termination options
- Moisture seal
- Bend configuration—including dimensions, critical tolerances, major and minor axis bends (please send drawing, if available)
- Options, including external finish and mounting method
- Quantity

Availability

One and ⅝ Inch Double Ended

Straight Length Element

Stock: Same day shipment

Modified Stock①: Three to five working days

Standard: Three weeks

Made-to-Order: Four to five weeks

Formed Element

Modified Stock①: Five to seven working days

Standard: Three weeks

Made-to-Order: Four to five weeks

One and ⅝ Inch Single Ended

Straight Length Element

Stock: Same day shipment

Modified Stock①: Three working days

Made-to-Order: Four to five weeks

Formed Element

Modified Stock①: Three working days

Made-to-Order: Four to five weeks

Options, complexity and quantity may affect availability and lead times. Consult factory.

① Stock units with catalog options.

FIREBAR Heating Elements

FINBAR

Composed of aluminized steel fins press fitted to a one inch single-ended FIREBAR element. The FINBAR is designed to improve heat transfer to the air and permits putting more power in tighter spaces—like forced air ducts, dryers, ovens and load bank resistors.

Heat transfer, lower sheath temperature and element life are all maximized by its finned construction.

Installation is simplified by terminations exiting at one end and mounting accommodations on both ends.

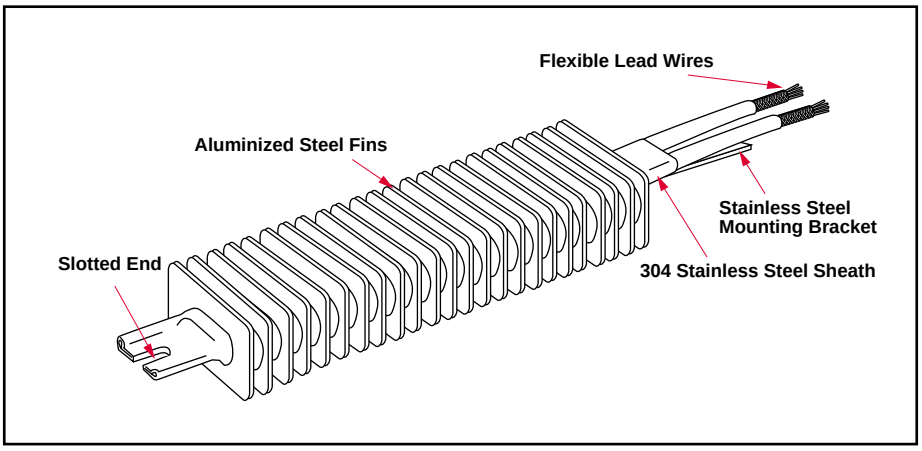

Performance Capabilities

- Watt densities to 50 W/in^2 (7.7 W/cm^2)
- 304 stainless steel sheath temperatures to 1200°F (650°C)
- Voltages to 480V~(ac)
- Amperages to 48 amps per heater or 16 amps per coil

Features and Benefits

- **Rugged aluminized steel fins** effectively increase surface area to approximately 16 square inches for every linear inch of element length. Fins press fitted to the heating element improve heat transfer to the air.
- **Single-ended termination** simplifies wiring and installation.
- **Stainless steel mounting bracket**, welded to the terminal end, is supplied with a slotted end for ease of installation.
- **Lavacone seals** provide protection against humid storage conditions. Moisture retardant to 392°F (200°C).

Applications

- Forced air heating for dryers, ovens, ducts
- Still air heating for ovens, comfort heating
- Incubators
- Ink drying
- Load bank resistors

Construction Features

Construction features are detailed for assembly stock products only. Optional materials, sizes, terminations and ratings may be available at additional cost. For availability and ordering information on options, see **pages 307 to 312**.

Watt Density: Stock; up to 40 W/in^2 (6.2 W/cm^2), made-to-order; up to 50 W/in^2 (7.7 W/cm^2)

Fin Surface Area: 16 in^2/linear inch (40.5 cm^2/linear cm)

Fin Cross Section: 2 X 1 inch (50 X 25 mm)

Maximum Operating Temperature: Sheath material: 304 Stainless Steel, 1200°F (650°C), Fin material; Aluminized Steel; 1100°F (600°C)

Heater Length: Stock; 10 to 48 inches (260 to 1210 mm), made-to-order; 6 to 120 inches (150 to 3050 mm)

No-Heat Length: 1 inch minimum, 12 inch maximum (25/305 mm)

Voltages: Up to 480V~(ac)

Phase: Stock; 1-phase parallel made-to-order; 1-phase parallel or 3-phase wye

Resistance Coils: Stock; 1 made-to-order 1 or 3

Terminations: Flexible lead wires, quick connect (spade), screw lug (plate) and threaded stud

Seal Material: Lavacone, rated to 392°F (200°C)

Optional Internal Thermocouple: made-to-order only; ASTM **Type K**

Single-End Configuration: Stock: slotted, made-to-order; slotted, no-slot or sealed

Agency Recognition: refer to FIREBAR UL file # E52951 and CSA file # 31388 under ***Agency Recognition*** on **pages 268 to 271**.

Tubular and Process Assemblies

FIREBAR Heating Elements

Air Heating

The *Watt Density, Air Flow and Sheath Temperature* graph shows the relationship between watt density, air flow velocity and sheath temperature, along with a recommended temperature to avoid deteriorating the fins. Be aware that **lower sheath temperature yields longer heater life**.

The graphic representation is based on a a single-ended FINBAR, various air velocities (at 68°F/20°C inlet temperature) and different watt densities.

To determine, from the graph, the operating temperature of the FINBAR's sheath, identify the air velocity curve that approximates your application in feet per second (meters per second). Then look at the vertical line that most closely approximates the FINBAR's watt density. From the intersecting point, read over to the temperature column to determine the sheath's operating temperature.

Watt Density, Air Flow and Sheath Temperature (°F)

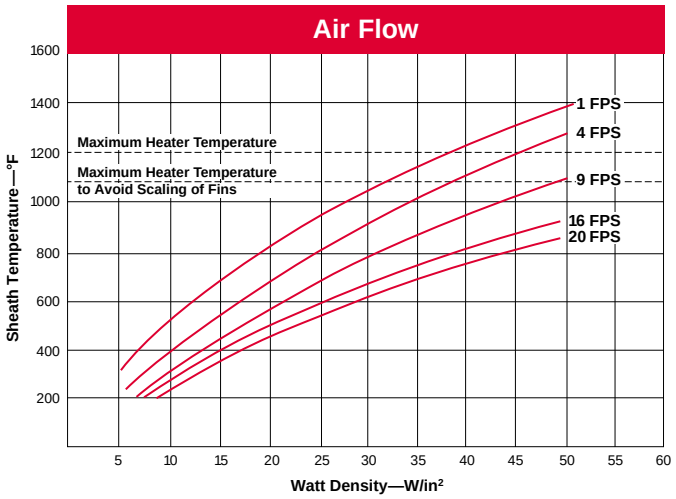

Watt Density, Air Flow and Sheath Temperature (°C)

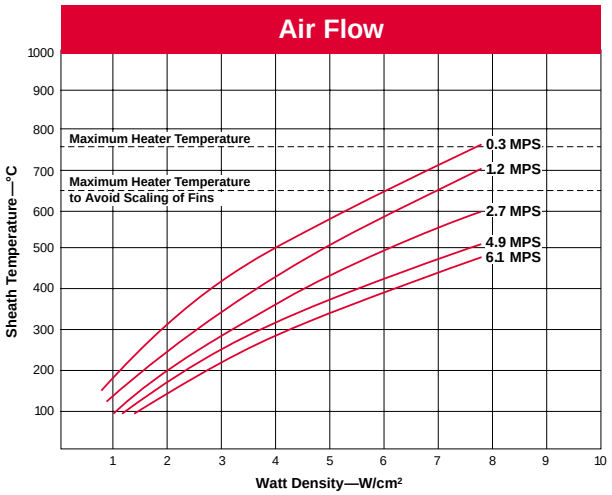

Application Hints

- Avoid deteriorating the fins by not exceeding the recommended maximum fin temperature of 1100°F (600°C).
- Ensure proper air flow to prevent premature heater failure.
- Locate the temperature sensor downstream from heater(s) for process temperature sensing.

The following mounting parameters are recommended:

- Air flow over element must be parallel with the flat side.
- Element center line to element center line spacing must be a minimum of 1½ inches (38 mm).

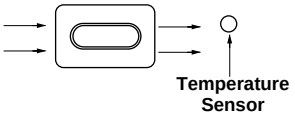

Proper air flow relative to the heater's sheath is parallel with the longer cross sectional axis.

Dual Ended FINBAR

FINBAR elements are typically terminated at one end. Upon request, however, dual ended FINBAR heaters can be ordered. To order, specify **dual ended FINBAR** and lead length.

FIREBAR Heating Elements

FINBAR

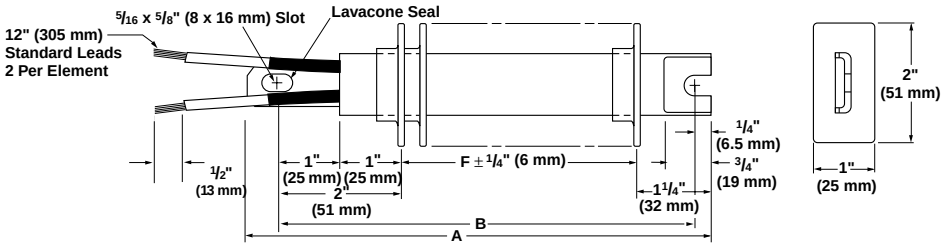

FINBAR Description	Overall A Dimension Inch	(mm)	Overall F Dimension Inch	(mm)	Mounting B Dimension Inch	(mm)	Watts	Code Number 120V~(ac)	Code Number 240V~(ac)	Est.Net Weight lbs	(kg)
Application: Forced Air											
20 W/in²	10¼	(260)	6½	(158)	9½	(241)	300	**FSP91WMF**		1.4	(0.7)
304 SS	11¾	(298)	8	(203)	11	(279)	375	**FSP101WMF**		1.4	(0.7)
(3.1 W/cm²)	13¾	(349)	10	(254)	13	(330)	450	**FSP121WMF**		1.5	(0.7)
	15	(381)	11¼	(285)	14¼	(362)	500	**FSP141WMF**		1.5	(0.7)
	17⅝	(447)	13⅞	(352)	16⅞	(428)	650	**FSP161WMF**	**FSP1610WMF**	1.6	(0.8)
	19¼	(489)	15½	(393)	18½	(469)	725	**FSP181WMF**	**FSP1810WMF**	1.7	(0.8)
	20¾	(527)	17	(431)	20	(508)	800	**FSP191WMF**	**FSP1910WMF**	1.7	(0.8)
	23½	(597)	19¾	(501)	22¾	(577)	900	**FSP221WMF**	**FSP2210WMF**	1.8	(0.9)
	25¼	(641)	21½	(546)	24½	(622)	1000	**FSP241WMF**	**FSP2410WMF**	1.9	(0.9)
	26½	(673)	22¾	(577)	25¾	(654)	1050	**FSP251WMF**	**FSP2510WMF**	1.9	(0.9)
	30⅛	(765)	26⅜	(669)	29⅜	(746)	1250	**FSP291WMF**	**FSP2910WMF**	2.1	(1.0)
	33⅛	(841)	29⅜	(746)	32⅜	(822)	1350	**FSP321WMF**	**FSP3210WMF**	2.2	(1.0)
	35⅝	(905)	31⅞	(809)	34⅞	(885)	1500		**FSP3410WMF**	2.3	(1.1)
	38⅜	(975)	34⅝	(879)	37⅝	(955)	1600		**FSP3710WMF**	2.4	(1.1)
	42⅛	(1070)	38 ⅜	(974)	41⅜	(1050)	1800		**FSP4110WMF**	2.5	(1.2)
	47¾	(1213)	44	(1117)	47	(1193)	2000		**FSP4610WMF**	2.7	(1.3)
40 W/in²	10¼	(260)	6½	(158)	9½	(241)	600	**FSP91WKF**		1.4	(0.7)
304 SS	11¾	(298)	8	(203)	11	(279)	750	**FSP101WKF**		1.4	(0.7)
(6.2 W/cm²)	13¾	(349)	10	(254)	13	(330)	900	**FSP121WKF**	**FSP1210WKF**	1.5	(0.7)
	15	(381)	11¼	(285)	14¼	(362)	1000	**FSP131WKF**	**FSP1310WKF**	1.5	(0.7)
	17⅝	(447)	13⅞	(352)	16⅞	(428)	1300	**FSP161WKF**	**FSP1610WKF**	1.6	(0.8)
	19¼	(489)	15½	(393)	18½	(469)	1450	**FSP181WKF**	**FSP1810WKF**	1.7	(0.8)
	20¾	(527)	17	(431)	20	(508)	1600		**FSP1910WKF**	1.7	(0.8)
	23½	(597)	19¾	(501)	22¾	(577)	1800		**FSP2210WKF**	1.8	(0.9)
	25¼	(641)	21½	(546)	24½	(622)	2000		**FSP2410WKF**	1.9	(0.9)
	26½	(673)	22¾	(577)	25¾	(654)	2100		**FSP2510WKF**	1.9	(0.9)
	30⅛	(765)	26⅜	(669)	29⅜	(746)	2500		**FSP2910WKF**	2.1	(1.0)
	33⅛	(841)	29⅜	(746)	32⅜	(822)	2700		**FSP3210WKF**	2.2	(1.0)
	35⅝	(905)	31⅞	(809)	34⅞	(885)	3000		**FSP3410WKF**	2.3	(1.1)
	38⅜	(975)	34⅝	(879)	37⅝	(955)	3200		**FSP3710WKF**	2.4	(1.1)
	42⅛	(1070)	38⅜	(974)	41⅜	(1050)	3600		**FSP4110WKF**	2.5	(1.2)
	47¾	(1213)	44	(1117)	47	(1193)	4000		**FSP4610WKF**	2.7	(1.3)

All stock units are Assembly stock.
Availability
Assembly Stock: Three working days

F.O.B.: Hannibal, Missouri

How to Order

To order a stock FINBAR heating element, specify:

- Watlow Code number
- Volts/watts
- Termination options
- Options
- Quantity

For **made-to-order** FINBAR heating elements, specify:

- Type of application, including air flow velocity, volume, etc.
- Single- or double-ended element
- Volts/watts
- Heated length
- No-heat length
- Terminal pin length or termination options, including moisture seal type
- Quantity
- Options, including thermocouple, sealed end, no mounting bracket, etc.

Availability

Assembly Stock: Three working days

Modified Stock①: Five to seven working days

Made-to-Order: Four to five weeks

Options, complexity and quantity may affect availability and lead times. Consult factory.

① Assembly Stock units with catalog options.

Tubular and Process Assemblies

Quick Ship

On stock chart units:
- *Same day on most heaters*
- *10 working days on special voltages and/or wattages*
- *15 working days on special element lengths*

Screw Plug Immersion Heaters

Screw plug immersion heaters are ideal for direct immersion heating of liquids, including all types of oils and heat transfer solutions.

Available in a variety of stock and made-to-order sizes, Watlow screw plug immersion heaters feature both WATROD round and FIREBAR® flat tubular elements.

Heating elements are hairpin bent and either welded or brazed into the screw plug—depending on element sheath and plug material compatibility.

General purpose (NEMA 1) terminal enclosures are standard; with optional moisture resistant (NEMA 4), explosion resistant (NEMA 7) and explosion/moisture resistant (NEMA 7/4) enclosures available to meet specific application needs.

Optional thermostats provide convenient process temperature regulation.

Performance Capabilities

- Watt densities to 120 W/in^2 (18.6 W/cm^2)
- Wattages to 38kW
- UL® and CSA component recognition to 480V~(ac) and 600V~(ac) respectively
- Incoloy® sheath temperatures to 1600°F (870°C)
- Passivated 316 stainless steel sheath temperatures to 1200°F (650°C)
- 304 stainless steel sheath temperatures to 1200°F (650°C)
- Steel sheath temperatures to 750°F (400°C)
- Copper sheath temperatures to 350°F (175°C)

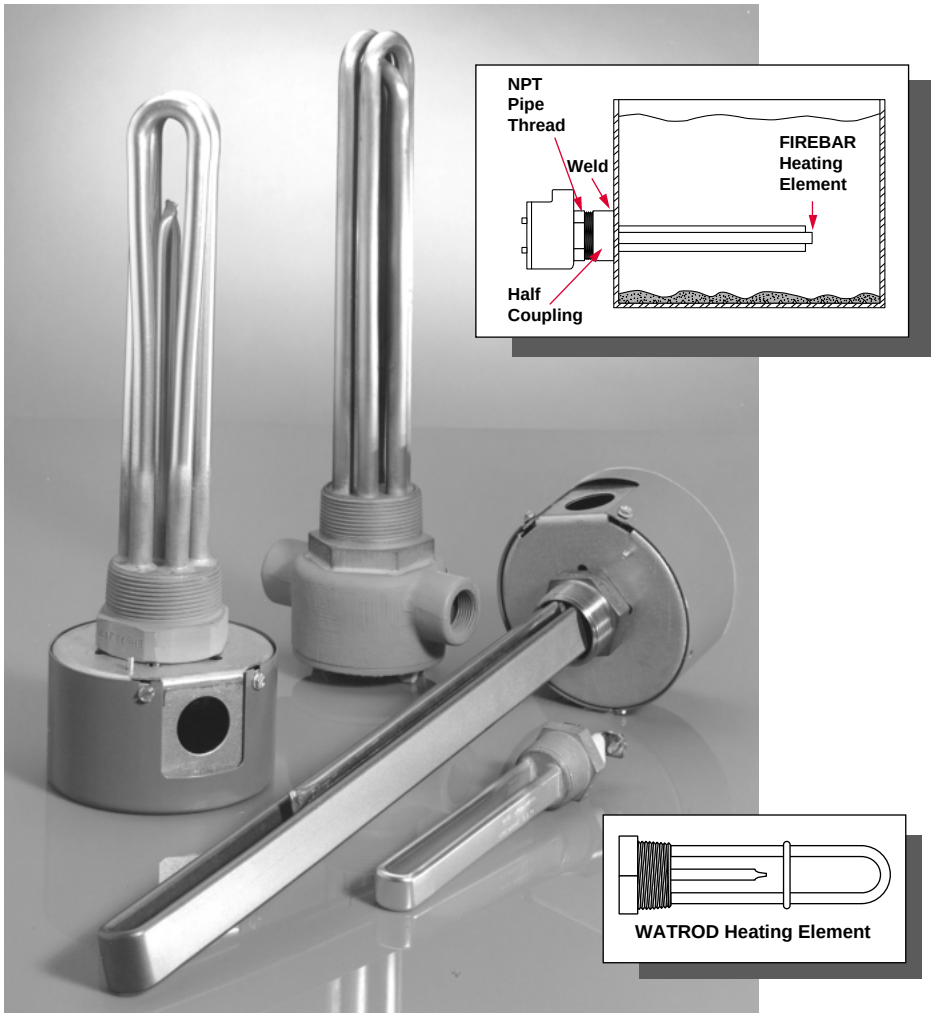

Features and Benefits

- **Screw plug and element sizes:**

1" NPT	0.315" WATROD
1¼" NPT	0.315" WATROD 1" FIREBAR
2" NPT	0.475" WATROD
2½" NPT	0.475" WATROD 1" FIREBAR

- **A variety of element sheath and screw plug materials** to meet application needs.
- **Integral thermowells** provide convenient temperature sensor insertion and replacement without draining the fluid being heated.
- **Terminal enclosures** can be rotated to simplify connection with existing conduits.
- **Welding or brazing** WATROD and FIREBAR elements to the screw plug provides a pressure tight seal.
- **WATROD hairpins are repressed (recompacted)** to maintain MgO density, dielectric strength, heat transfer and life.
- **2½" NPT screw plug assemblies feature element support(s)** to help ensure proper spacing for maximizing heater performance and life.
- **Phase capability**:

1" NPT	1-Phase
1¼", 2", 2½" NPT	1- or 3-Phase

- **UL® and CSA component recognition** under file numbers E52951 and 31388 respectively. See **pages 268-271** for details.

Incoloy® is a registered trademark of Special Metals Corporation.

UL® is a registered trademark of Underwriter's Laboratories, Inc.

Screw Plug Immersion Heaters

Applications

- Water:
  - Deionized
  - Demineralized
  - Clean
  - Potable
  - Process
- Industrial water rinse tanks
- Vapor degreasers
- Hydraulic oil, crude, asphalt
- Lubricating oils at API specified watt densities
- Air and gas flow
- Caustic solutions
- Chemical baths
- Anti-freeze (glycol) solutions
- Paraffin

Screw Plug Orientation

Correct element/thermowell orientation assures proper process temperature sensing.

Correct horizontal mounting of WATROD and FIREBAR screw plugs is shown to the right. Correct orientation assures optimum performance and maximum heater life. Additional mounting information is provided in the *Installation and Maintenance Instructions*.

FIREBAR Heating Element

1¼" NPT–One Element

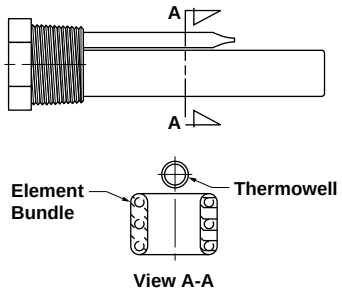

2½" NPT–Three Elements

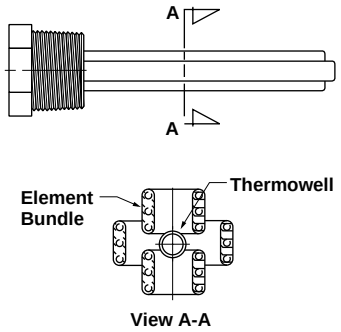

WATROD Heating Element

1" NPT–One Element

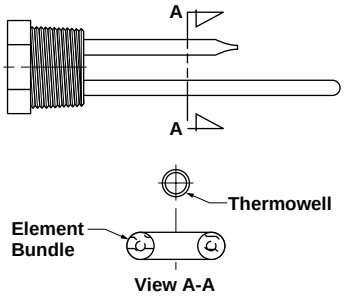

1¼" & 2" NPT–Two Elements

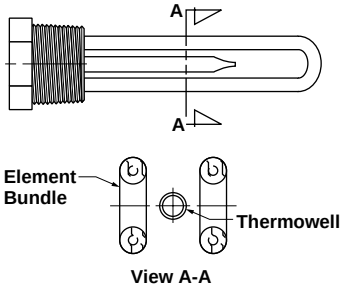

2" & 2½" NPT–Three Elements

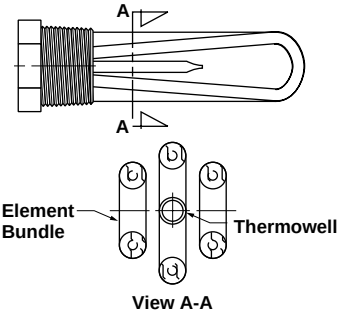

Options

Terminal Enclosures

General purpose (NEMA 1) terminal enclosures, without thermostats, are standard on all screw plug immersion heaters. To meet specific application requirements, Watlow offers the following optional terminal enclosures:

- General purpose (NEMA 1) with single or double pole thermostat
- Moisture resistant (NEMA 4) or corrosion resistant (NEMA 4X) — available with optional single or double pole thermostat
- Explosion resistant (NEMA 7) class 1, groups C and D explosion resistant—available with optional single or double pole thermostat. For class 1, group B enclosures, consult your Watlow representative or refer to CSA specifications on **page 271**.
- Explosion/moisture resistant (NEMA 7/4) combination—available with optional single or double pole thermostat

Note: Unless otherwise stated on the accompanying illustrations, both WATROD and FIREBAR screw plugs are centered on the terminal enclosure. To order, add the suffix letter(s) to the screw plug heater's base code number. This is depicted on the *Stock* and *Options* ordering example on **page 336**. Also, specify class and group, if applicable.

Tubular and Process Assemblies

Screw Plug Immersion Heaters

Options

Continued

General Pupose (NEMA 1)

Single Pole Thermostat

All screw plug sizes

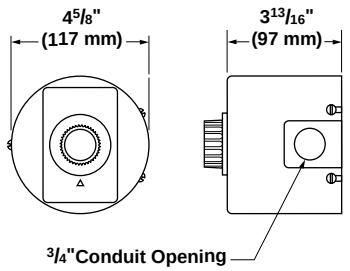

Double Pole Thermostat

All screw plug sizes

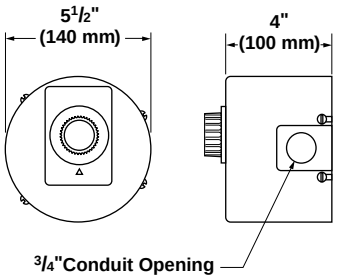

Caution:

Explosion-resistant terminal enclosures are intended to provide explosion containment in the electrical termination/wiring enclosure only. No portion of the assembly outside of this enclosure is covered under this NEMA rating. NEMA rating effectiveness may be compromised by abuse or misapplication.

Moisture Resistant NEMA 4

Without Thermostat

All screw plug sizes

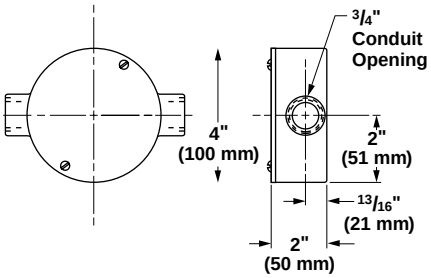

Single Pole Thermostat

1" & 1¼" NPT–1 WATROD Element

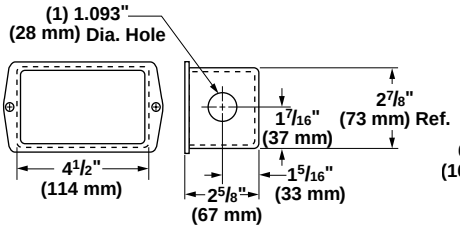

Note: The thermostat is not centered on the WATROD screw plug immersion heater.

Single or Double Pole Thermostat

1¼" NPT–2 WATROD Elements

1¼" NPT–1 FIREBAR Element

All 2" & 2 ½" NPT screw plugs

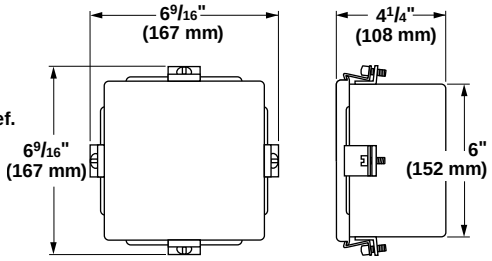

Note: The thermostat is not centered on the screw plug immersion heater.

Explosion/Moisture Resistant (NEMA 7 or 7/4) ①

Without Thermostat

All WATROD screw plugs

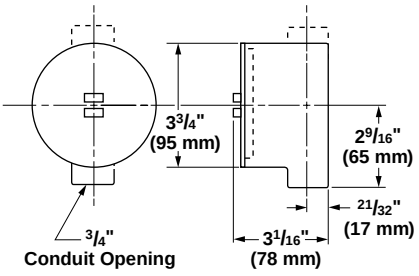

Single or Double Pole Thermostat

1¼" NPT–1 FIREBAR Element

All WATROD screw plugs

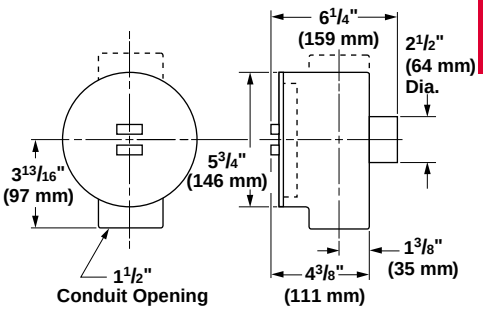

① All NEMA 7/4 rated terminal enclosures supplied with a gasket for the cover.

Screw Plug Immersion Heaters

Options

Continued

Explosion/Moisture Resistant (NEMA 7 or 7/4) ①

Without Thermostat

1¼ " NPT—1 FIREBAR element

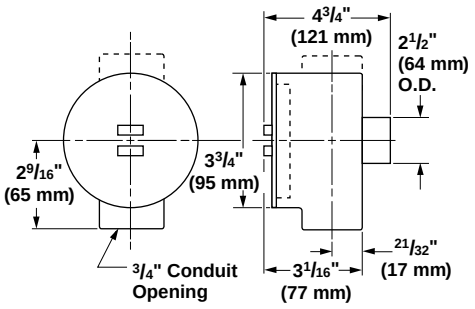

Without Thermostat

2½ " NPT–3 FIREBAR elements

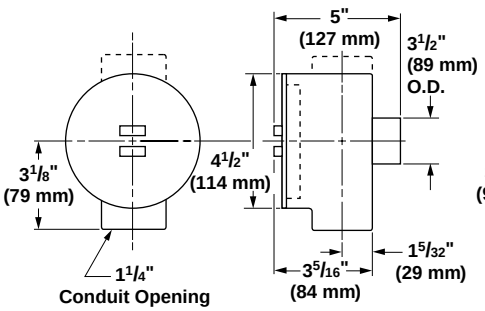

Single or Double Pole Thermostat

2½ " NPT–3 FIREBAR elements

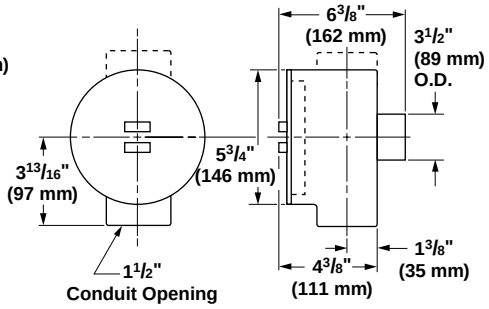

① All NEMA 7/4 rated terminal enclosures supplied with a gasket for the cover.

CSA Certified Enclosures

CSA certified moisture and/or explosion resistant terminal enclosures protect wiring in hazardous gas environments. These terminal enclosures, covered under CSA file number 61707, are available on all WATROD and FIREBAR screw plug immersion heaters. For additional information, consult your Watlow representative.

To order, specify **CSA certified enclosure**, **process temperature** (°F), maximum **working pressure** of application (psig), **media** being heated and heater **mounting orientation** (horizontal or vertical) and **screw plug size**.

Pilot Light

The optional pilot light gives the operator visual indication of heater on or off power status.

The PL10 pilot light is configured to a maximum 250V~(ac), and supplied with six inch (150 mm) leads.

The PL11 pilot light is rated for 480V~(ac), and supplied with four inch (100 mm) leads.

Pilot lights may be attached to either single or double pole thermostats with general purpose (NEMA 1) enclosure only. For moisture or explosion resistant terminal enclosures (NEMA 4 or NEMA 7), consult factory.

To order, refer to the *Build-a-Code* chart on **page 336**.

Thermostats

To provide process temperature control, Watlow offers optional single pole, single throw (SPST) and double pole, single throw (DPST) thermostats.

Unless otherwise specified, thermostats are mounted inside the terminal enclosure. For details and ordering information, refer to *Thermostats* on **pages 423 to 425**.

Please verify that the thermostat's sensing bulb O.D. is compatible with the screw plug's thermowell I.D.

Tubular and Process Assemblies

Screw Plug Immersion Heaters

Options

Continued

Thermocouples

Type J or K thermocouples offer extremely accurate sensing of process and/or sheath temperatures. A thermocouple may be inserted into the thermowell or attached to the heater's sheath.

Thermocouples are supplied with 120 inch (305 mm) leads (longer lead lengths available). Unless otherwise specified, thermocouples are supplied with temperature ranges detailed on the *Thermocouple Types* chart.

Using a thermocouple requires an appropriate temperature and power control. These must be purchased separately. Watlow offers a wide variety of temperature and power controls to meet virtually all applications. Temperature controls can be configured to accept process variable inputs, too. Consult your Watlow representative for details.

To order, specify **Type J** or **K** thermocouple and lead length.

Indicate if the thermocouple is for **process temperature sensing** or heater sheath **high-limit protection**. Please specify if the screw plug will be mounted **vertical** or **horizontal** in the tank. **If vertical, indicate if the housing is on top or bottom**.

If the screw plug heater is mounted in an in-line circulation heating application, indicate flow direction relative to the heater's enclosure.

Thermocouple Types

ASTM Type	Conductor Characteristics Positive	Conductor Characteristics Negative	Recommended ① Temperature Range °F	Recommended ① Temperature Range (°C)
J	Iron (Magnetic)	Constantan (Non-Magnetic)	0 to 1000	(-20 to 540)
K	Chromel® (non-magnetic)	Alumel® (Magnetic)	0 to 2000	(-20 to 1100)

① Type J and Type K thermocouples are rated 32 to 1382°F and 32 to 2282°F (0-750°C and 0-1250°C), respectively. Watlow does not recommend exceeding temperature ranges shown on this chart for the tubular product line.

Wattages and Voltages

Watlow routinely supplies screw plug immersion heaters with 120 to 480V~(ac) as well as wattages from 250 watts to 38kW. If required, Watlow will configure heaters with voltages and wattages outside these parameters. For more information on special voltage and wattage configurations, consult your Watlow representative.

Sheath Materials

The following sheath materials are available on WATROD and FIREBAR heating elements:

Standard Sheath Materials

WATROD	Incoloy® 316 stainless steel Steel Copper
FIREBAR	Incoloy®

Made-to-Order Sheath Materials

WATROD	304 stainless steel Monel®
FIREBAR	304 stainless steel

Exotic Sheath Materials

Consult your Watlow representative for details and availability.

External Finishing

Passivation

During the manufacturing process, particles of iron or tool steel may become embedded in the stainless steel or alloy sheath. If not removed, these particles may corrode, produce rust spots and/or contaminate the process. For critical applications, passivation will remove free iron from the sheath. To order, specify **passivation**.

Other Finishes

Simple belt polishing and glass beading are available to meet cosmetic demands. Consult factory for details.

Alumel® and Chromel® are registered trademarks of the Hoskins Manufacturing Company.

Monel® is a registered trademark of Special Metals Corporation.

Screw Plug Immersion Heaters

Options

Continued

Screw Plug Materials

The following screw plug materials are available:

To order, specify **screw plug size** and **material**.

Standard Screw Plug Materials

WATROD	304 stainless steel 316 stainless steel Steel Brass
FIREBAR	304 stainless steel

Made-to-Order Plug Materials

For both WATROD and FIREBAR, consult factory about details and availability.

Screw Plug Sizes

Including European

- **NPT**–1, 1¼, 2, 2½ inch
- **Gas**–G1¼, G1½, G 2 inch (brass only)
- **BSP**–1½ inch (stainless steel only)

Consult factory for sizes and materials not listed.

To order, specify **size**, **style** (NPT, Gas or BSP) and material.

BSP = British Standard Pipe
Gas = Gas pipe standard

Screw Plug to Flange Adaptors

Screw plug to flange adaptors permit replacing flange heaters with screw plug heaters. To order, specify the appropriate code number.

Screw Plug to Flange Adaptors

Screw Plug to Flange Adaptor Sizes	Material	Estimated Shipping Wt. lbs	(kg)	Availability	Code Number
1 ¼ to 3”-150#	Steel	13	(5.9)	Stock	**125X3SA**
2 ½ to 3”-150#	Steel	11	(5.0)	Stock	**250X3SA**
2 ½ to 4”-150#	Steel	16	(7.3)	Stock	**250X4SA**
2 ½ to 5”-150#	Steel	25	(11.3)	Stock	**250X5SA**
2 ½ to 6”-150#	Steel	33	(15.0)	Stock	**250X6SA**

Application Hints

- Select the recommended sheath material and watt density for the substance being heated. Use the ***Supplemental Applications Chart*** on **pages 263 to 266**. If unable to determine the correct heater material and type, consult your Watlow representative.
- Extend the element’s no-heat section completely into the fluid being heated to help prevent premature heater failure. See accompanying illustration for proper no-heat section placement.
- Locate screw plug heater low in the tank, but above the sludge level.

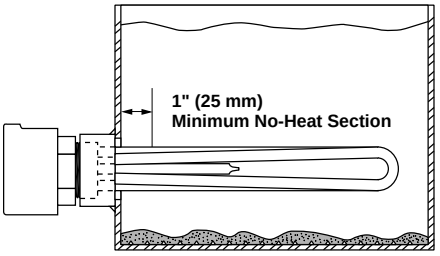

- Choose a FIREBAR element when your application requires a smaller system package or lower watt density.
- Ensure wiring integrity by making sure terminal enclosure temperature does not exceed 400°F (205°C).
- Keep electrical connections clean, dry and tight.
- Minimize problems associated with low liquid level conditions by using a low liquid level sensor or sheath temperature high-limit control.
- Periodically remove the screw plug assembly for inspection and clean the heating element(s). This preventive maintenance will reduce premature failure and optimize heater performance.
- Refer to the *Installation and Maintenance Instructions* for correct orientation of FIREBAR elements. Correct element orientation to flow minimizes pressure drop, increases buoyancy force and heater performance.

Tubular and Process Assemblies

Screw Plug Immersion Heaters

Screw Plug Heater Dimensions

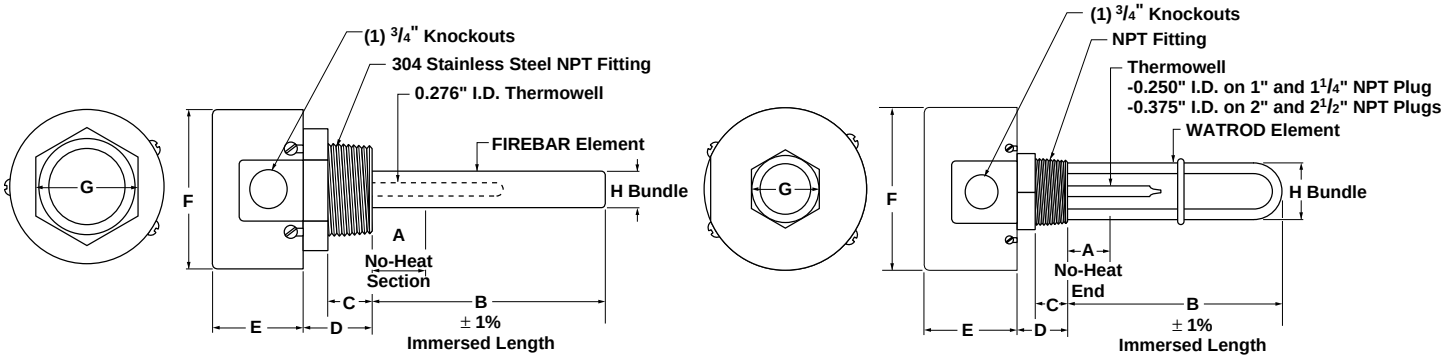

WATROD and FIREBAR Screw Plug Immersion Heater Dimensions

Heater Type	NPT Size in	A Dimension in	(mm)	C Dimension in	(mm)	D Dimension in	(mm)	E Dimension in	(mm)	F Dimension in	(mm)	G Dimension in	(mm)	H Dimension* in	(mm)
WATROD	1	1	(25)	⅞	(22)	1 ¼	(32)	2 ⅝	(67)	4 ⅝	(117)	1 ⅜	(35)	1 ⅛	(29)
WATROD	1 ¼	1 15/16	(24)	15/16	(24)	1 5/16	(33)	2 ⅝	(67)	4 ⅝	(117)	1 ¾	(44)	1 ⅜	(35)
WATROD	2 Steel	2 9/16	(65)	1	(25)	1 11/16	(43)	2 ⅝	(67)	4 ⅝	(117)	2 ½	(64)	2 ¼	(57)
WATROD	2 Brass	2 11/16	(68)	1 1/16	(27)	1 9/16	(40)	2 ⅝	(67)	4 ⅝	(117)	2 ½	(64)	2 ¼	(57)
WATROD	2 S. Steel	2 13/16	(71)	1	(25)	1 ⅝	(41)	2 ⅝	(67)	4 ⅝	(117)	2 ½	(64)	2 ¼	(49)
WATROD	2 ½	2 3/16	(56)	1 5/16	(33)	2 1/16	(52)	2 ⅝	(67)	4 ⅝	(117)	3 ½	(76)	2 ½	(64)
FIREBAR	1 ¼	3 ⅞	(98)	13/16	(21)	1 1/16	(27)	2 ⅝	(67)	4 ⅝	(117)	1 ¾	(44)	1 ⅜	(35)
FIREBAR	2 ½	3 ⅜	(86)	1 ¼	(32)	1 ½	(38)	2 ⅝	(67)	4 ⅝	(117)	3 ½	(76)	2 ½	(64)

* **Note**: All plug bundles fit into equivalent NPT coupling. They do not fit in equivalent pipe sizes.

1" NPT Screw Plug – WATROD Element

WATROD Description	kW	Immersed B Dimension inch	(mm)	Code No. 120V~(ac) 1-Phase	Code No. 240V~(ac) 1-Phase	Est. Ship. Weight lbs	(kg)
Application: Clean Water							
60 W/in²	0.5	4½	(114)	**BCC4J1**	**BCC4J10**	3	(2)
Brass Plug	0.75	6½	(165)	**BCC6J1**	**BCC6J10**	3	(2)
1-Copper	1.0	6⅝	(168)	**BCC6L1**	**BCC6L10**	3	(2)
(9.3 W/cm²)	1.25	8	(203)	**BCC8A1**	**BCC8A10**	4	(2)
	1.5	10⅝	(270)	**BCC10L1**	**BCC10L10**	4	(2)
	2.0	12½	(318)	**BCC12J1**	**BCC12J10**	5	(3)
	2.5	14¾	(375)	**BCC14N1**	**BCC14N10**	5	(3)
	3.0	16¾	(426)	**BCC16N1**	**BCC16N10**	6	(3)
	4.0	21	(533)		**BCC21A10**	6	(3)
Applications: Lightweight Oils, Degreasing Solutions, Heat Transfer Oils							
23 W/in²	0.25	6½	(165)	**BCS6J1**	**BCS6J10**	3	(2)
Steel Plug	0.35	9¼	(235)	**BCS9E1**	**BCS9E10**	4	(2)
1-Steel	0.5	9⅜	(238)	**BCS9G1**	**BCS9G10**	4	(2)
(3.6 W/cm²)	0.75	13½	(343)	**BCS13J1**	**BCS13J10**	5	(3)
	1.0	16¾	(425)	**BCS16N1**	**BCS16N10**	6	(3)
	1.5	23¾	(603)	**BCS23N1**	**BCS23N10**	7	(4)

All heating elements are Assembly Stock unless otherwise noted.
Availability
Assembly Stock: Three to five working days

Tubular and Process Assemblies

Screw Plug Immersion Heaters

1¼" NPT Screw Plug – WATROD Element

WATROD Description	kW	Immersed B Dimension inch (mm)	Code No. 120V~(ac) 1-Phase	Code No. 120/240V~(ac) 1-Phase	Code No. 240V~(ac) 1-Phase	Est. Ship. Weight lbs (kg)
Application: Clean Water						
60 W/in²	0.5	4⅜ (111)	**BDC4G1**		**BDC4G10**	3 (2)
Brass Plug	0.75	6⅜ (162)	**BDC6G1**		**BDC6G10**	3 (2)
1-Copper						
(9.3 W/cm²)						
60 W/in² ④	1.0	4⅜ (111)		**BEC4G6**		4 (2)
Brass Plug	1.5	6⅜ (162)		**BEC6G6**		4 (2)
2-Copper	2.0	8½ (216)		**BEC8J6**		5 (3)
(9.3 W/cm²)	2.5	10¾ (273)		**BEC10N6**		5 (3)
	3.0	15 (381)		**BEC15A6**		6 (3)
	4.0	19 (483)			**BEC19A10**	7 (4)
	5.0	23½ (597)			**BEC23J10**	8 (4)
	6.0	27½ (699)			**BEC27J10**	9 (4)
Applications: Lightweight Oils, Degreasing Solutions, Heat Transfer Oils						
23 W/in² ④	0.5	6⅜ (162)		**BES6G6**		4 (2)
Steel Plug	0.5	7⅜ (187)		**BES7G6**		4 (2)
2-Steel	0.7	8⅞ (225)		**BES8R6**		5 (3)
(3.6 W/cm²)	0.75	10 1/16 (256)		**BES10B6**		5 (3)
	1.0	12¾ (324)		**BES12N6**		6 (3)
	1.5	19⅜ (492)		**BES19G6**		7 (4)
	2.0	25⅜ (645)		**BES25G6**		8 (4)
	3.0	36⅞ (937)		**BES36R6**		9 (4)
Applications: Forced Air and Gases, Caustic Solutions, Degreasing Solutions						
23 W/in² ④	1.0	13⅜ (340)		**BEN13G6**		6 (3)
304 SS Plug	1.5	19 (483)		**BEN19A6**		7 (4)
2-Incoloy®	2.0	24⅜ (619)		**BEN24G6**		8 (4)
(3.6 W/cm²)						

1¼" NPT Screw Plug– FIREBAR Element

FIREBAR Description	kW	Immersed B-Dimension inch (mm)	Code No. 240V~(ac) 1-Phase	Code No. 240V~(ac) 3-Phase	Code No. 480V~(ac) 3-Phase	Est. Ship. Weight lbs (kg)
Applications: Clean and Potable Water						
90 W/in² ⑧	1.5	7⅝ (194)	**BDNF7R10** ② ⑦		**BDNF7R11** ② ⑦	5 (3)
304 SS Plug	3.0	11⅛ (283)	**BDNF11G10** ② ⑦		**BDNF11G11** ② ⑦	6 (3)
1-Incoloy®	5.0	16⅛ (410)		**BDNF16G3**	**BDNF16G5**	7 (4)
(14 W/cm²)	6.5	19⅛ (486)		**BDNF19G3**	**BDNF19G5**	8 (4)
	8.5	24⅜ (619)		**BDNF24L3**	**BDNF24L5**	9 (4)
	10.5	29⅝ (753)		**BDNF29R3**	**BDNF29R5**	10 (5)
	12.7	34⅝ (879)		**BDNF34R3**	**BDNF34R5**	11 (5)
	17.0	45⅛ (1146)		**BDNF45G3**	**BDNF45G5**	13 (6)
	21.5	55⅝ (1413)			**BDNF55R5**	15 (7)

CONTINUED

All heating elements are Assembly Stock unless otherwise noted.
Availability
Assembly Stock: Three to five working days
Standard: 10 working days

② Standard
④ Wired for higher voltage.
⑦ Not available as 3-phase – 1-phase only.
⑧ Can be wired 1-phase.

Tubular and Process Assemblies

Screw Plug Immersion Heaters

1¼" NPT Screw Plug – FIREBAR Element

FIREBAR Description	kW	Immersed B Dimension inch	(mm)	Code No. 240V~(ac) 1-Phase	240V~(ac) 3-Phase	480V~(ac) 3-Phase	Est. Ship. Weight lbs	(kg)
Applications: Process Water, Ethylene Glycol (50%)								
45 W/in² ⑧	2.0	13	(330)		**BDNF13A27**		6	(3)
304 SS Plug	2.5	15½	(394)		**BDNF15J27**		7	(4)
1-Incoloy®	3.0	18	(457)		**BDNF18A27**		8	(4)
(7 W/cm²)	4.0	22½	(572)		**BDNF22J27**	**BDNF22J28**	9	(4)
	5.0	27½	(699)		**BDNF27J27**	**BDNF27J28**	10	(5)
	6.0	32½	(826)		**BDNF32J27**	**BDNF32J28**	11	(5)
	8.0	42	(1067)		**BDNF42A27**	**BDNF42A28**	13	(6)
	10.0	51½	(1308)		**BDNF51J27**	**BDNF51J28**	15	(7)
Applications: Cooking Oils, Ethylene Glycol (100%)								
30 W/in² ③	1.7	16⅛	(410)		**BDNF16G12**	**BDNF16G13**	7	(4)
304 SS Plug	2.2	19⅛	(486)		**BDNF19G12**	**BDNF19G13**	8	(4)
1-Incoloy®	2.8	24⅜	(619)		**BDNF24L12**	**BDNF24L13**	9	(4)
(4.7 W/cm²)	3.5	29⅝	(752)		**BDNF29R12**	**BDNF29R13**	10	(5)
	4.25	34⅝	(880)		**BDNF34R12**	**BDNF34R13**	11	(5)
	5.7	45⅛	(1146)		**BDNF45G12**	**BDNF45G13**	13	(6)
	7.2	55⅝	(1413)		**BDNF55R12**	**BDNF55R13**	15	(7)
Applications: Heat Transfer Oils, Mineral Oils, Degreasing Solutions								
23 W/in² ⑧	1.25	16⅛	(410)		**BDNF16G20**		7	(4)
304 SS Plug	1.65	19⅛	(486)		**BDNF19G20**		8	(4)
1-Incoloy®	2.15	24⅜	(619)		**BDNF24L20**	**BDNF24L19**	9	(4)
(3.6 W/cm²)	2.65	29⅝	(752)		**BDNF29R20**	**BDNF29R19**	10	(5)
	3.2	34⅝	(879)		**BDNF34R20**	**BDNF34R19**	11	(5)
	4.25	45⅛	(1146)		**BDNF45G20**	**BDNF45G19**	13	(6)
	5.4	55⅝	(1413)		**BDNF55R20**	**BDNF55R19**	15	(6)
Applications: Medium Weight Oils, Heat Transfer Oils, Lubrication Oils, Liquid Paraffin								
15 W/in² ③	0.67	13	(330)		**BDNF13A29**		6	(3)
304 SS Plug	0.83	15½	(394)		**BDNF15J29**		7	(4)
1-Incoloy®	1.0	18	(457)		**BDNF18A29**		8	(4)
(2.3 W/cm²)	1.33	22½	(572)		**BDNF22J29**	**BDNF22J30**	9	(4)
	1.67	27½	(699)		**BDNF27J29**	**BDNF27J30**	10	(5)
	2.0	32½	(826)		**BDNF32J29**	**BDNF32J30**	11	(5)
	2.67	42	(1067)		**BDNF42A29**	**BDNF42A30**	13	(6)
	3.33	51½	(1308)		**BDNF51J29**	**BDNF51J30**	15	(7)
Applications: Bunker C and #6 Fuel Oils, Asphalt								
8 W/in² ③	0.43	16⅛	(410)		**BDNF16G22**		7	(4)
304 SS Plug	0.55	19⅛	(486)		**BDNF19G22**		8	(4)
1-Incoloy®	0.7	24⅜	(619)		**BDNF24L22**	**BDNF24L21**	9	(4)
(1.3 W/cm²)	0.88	29⅝	(753)		**BDNF29R22**	**BDNF29R21**	10	(5)
	1.08	34⅝	(880)		**BDNF34R22**	**BDNF34R21**	11	(5)
	1.4	45⅛	(1146)		**BDNF45G22**	**BDNF45G21**	13	(6)
	1.8	55⅝	(1413)		**BDNF55R22**	**BDNF55R21**	15	(7)

③ Must be operated 3-phase only.
⑧ Can be wired 1-phase.

All heating elements are Assembly Stock unless otherwise noted.
Availability
Assembly Stock: Three to five working days

Tubular and Process Assemblies

Screw Plug Immersion Heaters

2" NPT Screw Plug – WATROD Element (**Note:** Will not fit into a two inch pipe)

WATROD Description	kW	Immersed B Dimension inch (mm)	Code No. 120V~(ac) 1-Phase	120/240V~(ac) 1-Phase	240/480V~(ac) 1-Phase	240V~(ac) 3-Phase	480V~(ac) 3-Phase	Est. Ship. Weight lbs (kg)
Application: Clean Water								
60 W/in² ④	2.0	8⅛ (206)		**BGC78C6**	**BGC78C7**			4 (2)
Brass Plug	3.0	11⅛ (283)		**BGC711C6**	**BGC711C7**			5 (3)
2-Copper	4.0	15⅛ (384)		**BGC715C6**	**BGC715C7**			6 (3)
(9.3 W/cm²)	5.0	18⅛ (460)		**BGC718C6**	**BGC718C7** ②			6 (3)
	6.0	21⅛ (537)			**BGC721C7**			7 (4)
	8.0	26⅝ (676)			**BGC726L7**			7 (4)
	10.0	32⅛ (816)			**BGC732C7**			8 (4)
60 W/in²	3.0	8⅛ (206)	**BHC78C1**			**BHC78C3**	**BHC78C13** ② ③	5 (3)
Brass Plug	4.5	11⅛ (283)	**BHC711C1**			**BHC711C3**	**BHC711C5**	6 (3)
3-Copper	6.0	15⅛ (384)				**BHC715C3**	**BHC715C5**	7 (4)
(9.3 W/cm²)	7.5	18⅛ (460)				**BHC718C3**	**BHC718C5**	7 (4)
	9.0	21⅛ (537)				**BHC721C3**	**BHC721C5**	8 (4)
	12.0	26⅝ (676)				**BHC726L3**	**BHC726L5**	8 (4)
	15.0	32⅛ (816)				**BHC732C3**	**BHC732C5**	9 (4)
Application: Process Water								
48 W/in² ④	2.0	9¾ (248)		**BGN79N6**	**BGN79N7**			4 (2)
304 SS Plug	3.0	13¼ (337)		**BGN713E6**	**BGN713E7**			5 (3)
2-Incoloy®	4.0	17¾ (451)		**BGN717N6**	**BGN717N7**			6 (3)
(7.5 W/cm²)	5.0	20¼ (514)		**BGN720E6**	**BGN720E7**			7 (4)
	6.0	25¼ (641)			**BGN725E7**			7 (4)
	8.0	32¾ (832)			**BGN732N7**			8 (4)
	10.0	40¼ (1022)			**BGN740E7**			9 (4)
48 W/in² ⑤	3.0	9¾ (248)	**BHN79N1**			**BHN79N3** ②	**BHN79N5**	5 (3)
304 SS Plug	4.5	13¼ (337)	**BHN713E1**			**BHN713E3** ②	**BHN713E5** ②	6 (3)
3-Incoloy®	6.0	17¾ (451)				**BHN717N3** ②	**BHN717N5** ②	7 (4)
(7.5 W/cm²)	7.5	20¼ (514)				**BHN720E3** ②	**BHN720E5** ②	8 (4)
	9.0	25¼ (641)				**BHN725E3** ②	**BHN725E5** ②	9 (4)
	12.0	32¾ (832)				**BHN732N3** ②	**BHN732N5** ②	9 (4)
	15.0	40¼ (1022)				**BHN740E3**	**BHN740E5** ②	10 (5)
	18.0	47¾ (1213)				**BHN747N3** ②	**BHN747N5** ②	11 (5)

CONTINUED

All heating elements are Assembly Stock unless otherwise noted.
Availability
Assembly Stock: Three to five working days

② Stock
③ Must be operated 3-phase only.
④ Wired for higher voltage.
⑤ 240V~(ac) can be wired wye and operated at 480V~(ac) 3-phase to produce ⅓ more kW

Tubular and Process Assemblies

Screw Plug Immersion Heaters

2" NPT Screw Plug – WATROD Element (**Note:** Will not fit into a two inch pipe)

WATROD Description	kW	Immersed B Dimension inch (mm)	Code No. 120V~(ac) 1-Phase	120/240V~(ac) 1-Phase	240/480V~(ac) 1-Phase	240V~(ac) 3-Phase	480V~(ac) 3-Phase	Est. Ship. Weight lbs (kg)
Applications: Forced Air and Gases, Caustic Solutions, Degreasing Solutions								
23 W/in² ⑤⑥	3.0	17¾ (451)	**BHNA17N1**			**BHNA17N3** ①	**BHNA17N5** ①	7 (4)
304 SS Plug	4.5	25¼ (641)	**BHNA25E1**			**BHNA25E3**	**BHNA25E5**	9 (4)
3-Incoloy®	6.0	32¾ (832)				**BHNA32N3**	**BHNA32N5** ①	9 (4)
(3.6 W/cm²)	7.5	40¼ (1022)				**BHNA40E3**	**BHNA40E5**	10 (5)
	9.0	47¾ (1213)				**BHNA47N3**	**BHNA47N5**	11 (5)
	12.5	64¼ (1632)				**BHNA64E3**	**BHNA64E5**	15 (7)
	15.0	76¾ (1950)				**BHNA76E3**	**BHNA76E5**	18 (9)
Applications: Lightweight Oils, Degreasing Solutions, Heat Transfer Oils								
23 W/in² ④	1.0	9½ (241)		**BGS79J6**	**BGS79J7**			4 (2)
Steel Plug	1.5	13½ (343)		**BGS713J6** ①	**BGS713J7** ①			5 (3)
2-Steel	2.0	17½ (445)		**BGS717J6** ①	**BGS717J7**			6 (3)
(3.6 W/cm²)	2.5	20½ (521)		**BGS720J6**	**BGS720J7**			7 (4)
	3.0	25 (635)		**BGS725A6**	**BGS725A7**			7 (4)
	4.0	32½ (826)		**BGS732J6**	**BGS732J7**			8 (4)
	5.0	40 (1016)		**BGS740A6**	**BGS740A7**			9 (4)
	6.0	47½ (1207)			**BGS747J7**			10 (5)
23 W/in²	1.5	9½ (241)	**BHS79J1**			**BHS79J3**	**BHS79J13** ③	5 (3)
Steel Plug	3.0	17½ (445)	**BHS717J1**			**BHS717J3**	**BHS717J5** ①	7 (4)
3-Steel	4.5	25 (635)	**BHS725A1**			**BHS725A3**	**BHS725A5**	9 (4)
(3.6 W/cm²)	6.0	32½ (826)				**BHS732J3**	**BHS732J5**	12 (6)
	7.5	40 (1016)				**BHS740A3**	**BHS740A5**	13 (6)
	9.0	47½ (1207)				**BHS747J3**	**BHS747J5**	13 (6)
	12.5	64 (1626)				**BHS764A3**	**BHS764A5**	17 (8)
Applications: Medium Weight Oils, Heat Transfer Oils, Liquid Paraffin								
16 W/in² ③	1.0	9¾ (248)				**BHN79N12**	**BHN79N13**	5 (3)
304 SS Plug	1.5	13¼ (337)				**BHN713E12**	**BHN713E13**	6 (3)
3-Incoloy®	2.0	17¾ (451)				**BHN717N12**	**BHN717N13**	7 (4)
(2.5 W/cm²)	2.5	20¼ (514)				**BHN720E12**	**BHN720E13**	8 (4)
	3.0	25¼ (641)				**BHN725E12**	**BHN725E13**	9 (4)
	4.0	32¾ (832)				**BHN732N12**	**BHN732N13**	9 (4)
	5.0	40¼ (1022)				**BHN740E12**	**BHN740E13**	10 (5)
	6.0	47¾ (1213)				**BHN747N12**	**BHN747N13**	11 (5)
15 W/in²	1.5	13¼ (337)				**BHSS13E3**	**BHSS13E13** ③	6 (4)
Steel Plug	2.0	17½ (445)				**BHSS17J3**	**BHSS17J5**	7 (4)
3-Steel	2.5	20½ (521)				**BHSS20J3**	**BHSS20J5**	8 (4)
(2.3 W/cm²)	3.0	25 (635)				**BHSS25A3**	**BHSS25A5**	9 (4)
	4.0	32½ (826)				**BHSS32J3**	**BHSS32J5**	12 (6)
	5.0	40 (1016)				**BHSS40A3**	**BHSS40A5**	13 (6)
	6.0	47½ (1207)				**BHSS47J3**	**BHSS47J5**	13 (6)
	7.5	58½ (1486)				**BHSS58J3**	**BHSS58J5**	16 (8)
	9.0	69¾ (1772)				**BHSS69N3**	**BHSS69N5**	20 (9)

All heating elements are Assembly Stock unless otherwise noted.

Availability

Assembly Stock: Three to five working days
Stock: Same day shipment

① Stock
③ 3-phase wye only.
④ Wired for higher voltage.
⑤ 240V~(ac) can be wired wye and operated at 480V~(ac) 3-phase to produce ⅓ more kW and watt density.
⑥ Can be rewired wye to produce ⅓ of original kW and watt density (3-phase only).

Tubular and Process Assemblies

Screw Plug Immersion Heaters

2½" NPT Screw Plug – WATROD Element

WATROD Description	kW	Immersed B Dimension inch	(mm)	Code No. 120V~(ac) 1-Phase	240V~(ac) 3-Phase	480V~(ac) 3-Phase	Est. Ship. Weight lbs	(kg)
Applications: Deionized Water, Demineralized Water								
60 W/in²	3.0	7⅝	(194)	**BLR77L1**	**BLR77L3**	**BLR77L5**	6	(3)
316 SS Plug	4.5	10⅝	(270)	**BLR710L1**	**BLR710L3**	**BLR710L5**	7	(4)
3-316 SS	6.0	14⅝	(372)		**BLR714L3**	**BLR714L5**	9	(4)
Passivated	7.5	17⅝	(448)		**BLR717L3**	**BLR717L5**	9	(4)
(9.3 W/cm²)	9.0	20⅝	(524)		**BLR720L3**	**BLR720L5**	11	(5)
	12.0	26⅛	(664)		**BLR726C3**	**BLR726C5**	12	(6)
	15.0	31⅝	(803)		**BLR731L3**	**BLR731L5**	14	(7)
	18.0	37⅛	(943)		**BLR737C3**	**BLR737C5**	15	(7)
Application: Clean Water								
60 W/in²	3.0	7⅝	(194)	**BLC77L1**	**BLC77L3**	**BLC77L13**	6	(3)
Brass Plug	4.5	10⅝	(270)	**BLC710L1**	**BLC710L3**	**BLC710L5**	7	(4)
3-Copper	6.0	14⅝	(371)		**BLC714L3**	**BLC714L5**	9	(4)
(9.3 W/cm²)	7.5	17⅝	(448)		**BLC717L3**	**BLC717L5**	9	(4)
	9.0	20⅝	(524)		**BLC720L3**	**BLC720L5** ①	11	(5)
	12.0	26⅛	(664)		**BLC726C3**	**BLC726C5** ①	12	(6)
	15.0	31⅝	(803)		**BLC731L3**	**BLC731L5**	14	(7)
	18.0	37⅛	(943)		**BLC737C3**	**BLC737C5**	15	(7)
Application: Process Water								
48 W/in²	3.0	9⅜	(238)	**BLN79G1**	**BLN79G3**	**BLN79G5**	6	(3)
304 SS Plug	4.5	12⅞	(327)	**BLN712R1**	**BLN712R3**	**BLN712R5**	7	(4)
3-Incoloy®	6.0	17⅜	(441)		**BLN717G3**	**BLN717G5** ①	9	(4)
(7.5 W/cm²)	7.5	19⅞	(505)		**BLN719R3**	**BLN719R5**	11	(5)
	9.0	24⅞	(632)		**BLN724R3**	**BLN724R5** ①	12	(6)
	12.0	32⅜	(822)		**BLN732G3**	**BLN732G5** ①	14	(7)
	15.0	39⅞	(1013)		**BLN739R3**	**BLN739R5**	15	(7)
	18.0	47⅜	(1203)		**BLN747G3**	**BLN747G5** ①	17	(8)

CONTINUED

All heating elements are Assembly Stock unless otherwise noted.
Availability
Assembly Stock: Three to five working days
Stock: Same day shipment

① Stock

Tubular and Process Assemblies

Screw Plug Immersion Heaters

2½" NPT Screw Plug – WATROD Element

WATROD Description	kW	Immersed B Dimension inch (mm)	Code No. 120V~(ac) 1-Phase	Code No. 240V~(ac) 3-Phase	Code No. 480V~(ac) 3-Phase	Est. Ship. Weight lbs (kg)
Applications: Forced Air and Gases, Caustic Solutions, Degreasing Solutions						
23 W/in² ⑤⑥	3.0	17⅜ (441)	**BLNA17G1**	**BLNA17G3**	**BLNA17G5**	9 (4)
304 SS Plug	4.5	24⅞ (632)	**BLNA24R1**	**BLNA24R3**	**BLNA24R5**	12 (5)
3-Incoloy®	6.0	32⅜ (822)		**BLNA32G3**	**BLNA32G5** ①	14 (7)
(3.6 W/cm²)	7.5	39⅞ (1013)		**BLNA39R3**	**BLNA39R5**	15 (7)
	9.0	47⅜ (1203)		**BLNA47G3**	**BLNA47G5**	17 (8)
	12.5	63⅞ (1622)		**BLNA63R3**	**BLNA63R5**	20 (9)
	15.0	76⅜ (1940)		**BLNA76G3**	**BLNA76G5**	23 (11)
Applications: Lightweight Oils, Degreasing Solutions, Heat Transfer Oils						
23 W/in² ⑥	3.0	17¼ (438)	**BLS717E1**	**BLS717E3**	**BLS717E5** ①	9 (4)
Steel Plug	4.5	24¾ (629)	**BLS724N1**	**BLS724N3**	**BLS724N5**	12 (6)
3-Steel	6.0	32¼ (819)		**BLS732E3**	**BLS732E5** ①	14 (7)
(3.6 W/cm²)	7.5	39¾ (1010)		**BLS739N3**	**BLS739N5**	15 (7)
	9.0	47¼ (1200)		**BLS747E3**	**BLS747E5**	17 (8)
	12.5	63¾ (1619)		**BLS763N3**	**BLS763N5**	20 (9)
	15.0	76¼ (1937)		**BLS776E3**	**BLS776E5**	27 (13)
Applications: Medium Weight Oils, Heat Transfer Oils, Liquid Paraffin						
16 W/in² ③	1.0	9⅜ (238)		**BLN79G12**	**BLN79G13**	6 (3)
304 SS Plug	1.5	12⅞ (327)		**BLN712R12**	**BLN712R13**	7 (4)
3-Incoloy®	2.0	17⅜ (441)		**BLN717G12**	**BLN717G13**	9 (4)
(2.5 W/cm²)	2.5	19⅞ (505)		**BLN719R12**	**BLN719R13**	11 (5)
	3.0	24⅞ (632)		**BLN724R12**	**BLN724R13**	12 (6)
	4.0	32⅜ (822)		**BLN732G12**	**BLN732G13**	14 (7)
	5.0	39⅞ (1013)		**BLN739R12**	**BLN739R13**	15 (7)
	6.0	47⅜ (1203)		**BLN747G12**	**BLN747G13**	17 (8)
Applications: Bunker C and #6 Fuel Oils						
8 W/in² ③	1.0	17¼ (438)		**BLS717E12**	**BLS717E13**	9 (4)
Steel Plug	1.5	24¾ (629)		**BLS724N12**	**BLS724N13**	12 (6)
3-Steel	2.0	32¼ (819)		**BLS732E12**	**BLS732E13**	14 (7)
(1.3 W/cm²)	2.5	39¾ (1010)		**BLS739N12**	**BLS739N13**	15 (7)
	3.0	47¼ (1200)		**BLS747E12**	**BLS747E13**	17 (8)
	4.0	63¾ (1619)		**BLS763N12**	**BLS763N13**	20 (9)
	5.0	76¼ (1937)		**BLS776E12**	**BLS776E13**	23 (11)

All heating elements are Assembly Stock unless otherwise noted.
Availability
Assembly Stock: Three to five working days
Stock: Same day shipment

① Stock
③ Must be operated 3-phase only.
⑤ 240V~(ac) can be wired wye and operated at 480V~(ac) 3-phase to produce ⅓ more kW and watt density.
⑥ Can be rewired wye to produce ⅓ of original kW and watt density (3-phase only).

Tubular and Process Assemblies

Screw Plug Immersion Heaters

2½" NPT Screw Plug – FIREBAR Element

FIREBAR Description	kW	Immersed B Dimension inch	(mm)	Code No. 240V~(ac) 3-Phase	Code No. 480V~(ac) 3-Phase	Est. Ship. Weight lbs	(kg)
Applications: Clean and Potable Water							
90 W/in² ⑧	15	15⅛	(384)	**BLNF15C3**	**BLNF15C5**	10	(5)
304 SS Plug	20	18⅛	(460)	**BLNF18C3**	**BLNF18C5 ③**	12	(6)
3-Incoloy®	25	23⅛	(587)		**BLNF23C5**	14	(7)
(14 W/cm²)	32	28⅝	(727)		**BLNF28L5**	17	(8)
	38	33⅝	(854)		**BLNF33L5**	18	(9)
Applications: Process Water, Ethylene Glycol (50%)							
45 W/in² ⑧	6	12	(305)	**BLNF12A27**		10	(5)
304 SS Plug	7.5	14½	(368)	**BLNF14J27**		11	(5)
3-Incoloy®	9	17	(432)	**BLNF17A27**		12	(6)
(7 W/cm²)	12	21½	(546)	**BLNF21J27**	**BLNF21J28**	14	(7)
	15	26½	(673)	**BLNF26J27**	**BLNF26J28**	17	(8)
	18	31½	(800)	**BLNF31J27**	**BLNF31J28**	18	(9)
	24	41	(1041)		**BLNF41A28**	20	(9)
	30	50½	(1283)		**BLNF50J28**	22	(10)
Applications: Cooking Oils, Ethylene Glycol (100%)							
30 W/in² ③	5	15⅛	(384)	**BLNF15C12**	**BLNF15C13**	10	(5)
304 SS Plug	6.5	18⅛	(460)	**BLNF18C12**	**BLNF18C13**	12	(6)
3-Incoloy®	8.5	23⅛	(587)	**BLNF23C12**	**BLNF23C13**	14	(7)
(4.7 W/cm²)	10.5	28⅝	(727)	**BLNF28L12**	**BLNF28L13**	17	(8)
	12.8	33⅝	(854)	**BLNF33L12**	**BLNF33L13**	18	(9)
	17	44⅛	(1121)	**BLNF44C12**	**BLNF44C13**	20	(9)
	21.5	54⅝	(1388)		**BLNF54L13**	22	(10)
Applications: Heat Transfer Oils, Mineral Oils, Degreasing Solutions							
23 W/in² ⑧	3.8	15⅛	(384)	**BLNF15C20**		10	(5)
304 SS Plug	4.9	18⅛	(460)	**BLNF18C20**		12	(6)
3-Incoloy®	6.4	23⅛	(587)	**BLNF23C20**	**BLNF23C19**	14	(7)
(3.6 W/cm²)	7.9	28⅝	(727)	**BLNF28L20**	**BLNF28L19**	17	(8)
	9.6	33⅝	(854)	**BLNF33L20**	**BLNF33L19**	18	(9)
	12.8	44⅛	(1121)	**BLNF44C20**	**BLNF44C19**	20	(9)
	16.1	54⅝	(1387)	**BLNF54L20**	**BLNF54L19**	22	(10)

CONTINUED

All heating elements are Assembly Stock unless otherwise noted.
Availability
Assembly Stock: Three to five working days
Stock: Same day shipment

③ Must be operated 3-phase only.
⑧ Can be wired 1-phase.

Tubular and Process Assemblies

Screw Plug Immersion Heaters

2½" NPT Screw Plug – FIREBAR Element

FIREBAR Description	kW	Immersed B Dimension inch	(mm)	Code No. 240V~(ac) 3-Phase	Code No. 480V~(ac) 3-Phase	Est. Ship. Weight lbs	(kg)
Applications: Medium Weight Oils, Heat Transfer Oils, Lubrication Oils, Liquid Paraffin							
15 W/in² ③	2	12	(305)	**BLNF12A29**		10	(5)
304 SS Plug	2.5	14½	(368)	**BLNF14J29**		11	(5)
3-Incoloy®	3	17	(432)	**BLNF17A29**		12	(6)
(2.3 W/cm²)	4	21½	(546)	**BLNF21J29**	**BLNF21J30**	14	(7)
	5	26½	(673)	**BLNF26J29**	**BLNF26J30**	17	(8)
	6	31½	(800)	**BLNF31J29**	**BLNF31J30**	18	(9)
	8	41	(1041)	**BLNF41A29**	**BLNF41A30**	20	(9)
	10	50½	(1283)	**BLNF50J29**	**BLNF50J30**	22	(10)
Applications: Bunker C and #6 Fuel Oils, Asphalt							
8 W/in² ③	1.25	15⅛	(384)	**BLNF15C22**		10	(5)
304 SS Plug	1.63	18⅛	(460)	**BLNF18C22**		12	(6)
3-Incoloy®	2.13	23⅛	(587)	**BLNF23C22**	**BLNF23C21**	14	(7)
(1.3 W/cm²)	2.63	28⅝	(727)	**BLNF28L22**	**BLNF28L21**	17	(8)
	3.19	33⅝	(854)	**BLNF33L22**	**BLNF33L21**	18	(9)
	4.25	44⅛	(1121)	**BLNF44C22**	**BLNF44C21**	20	(9)
	5.38	54⅝	(1388)	**BLNF54L22**	**BLNF54L21**	22	(10)

All heating elements are Assembly Stock unless otherwise noted.

Availability

Assembly Stock: Three to five working days

Stock: Same day shipment

③ Must be operated 3-phase only.

F.O.B.: Hannibal, Missouri

Screw Plug Immersion Heaters

Build-a-Code

Stock Screw Plug Code Number ①
(Includes general purpose terminal enclosure (NEMA 1)

Optional Terminal Enclosure

S = General purpose with thermostat (NEMA 1)
W = Moisture resistant (NEMA 4)
E = Explosion resistant (NEMA 7)
E/W = Explosion/moisture resistant (NEMA 7/4)

Optional Thermostat ② **or Thermocouple** ④

Optional Pilot Light ③

PL10 = 250V~(ac) Max.
PL11 = 480V~(ac) Max.

① Screw plug immersion heaters are supplied with a general purpose terminal enclosure (NEMA 1). A thermostat will not fit inside the standard 2⁵/₈ inch (67 mm) tall general purpose terminal enclosure. If a thermostat is required, a taller terminal enclosure will be supplied.
② Thermostat code numbers are shown in the *Thermostat Stock* chart on **page 425**.
③ Pilot lights are configured for general purpose enclosure (NEMA 1) applications. For pilot light availability with other terminal enclosure ratings, consult factory.
④ Specify Type J or K thermocouple. If overtemp thermocouple specify orientation horizontal, vertical up or vertical down.

How to Order

To order a stock screw plug heater, please specify:

- Watlow code number
- NPT screw plug size and material
- Volts/watts
- Phase
- Options
- Quantity

If our stock units do not meet your application needs, Watlow can provide made-to-order heaters. For a **made-to-order** unit, please specify:

- Application, including heated material, process temperature and flow rate, etc.
- Volts/watts
- Watt density
- Phase
- Screw plug size, style and material
- Element diameter
- Number of heating element(s)
- Sheath material
- Immersed (‘B’ dimension) length
- No-heat section below the plug
- Terminal enclosure type
- Options
- Quantity

Availability

Stock: Same day shipment

Assembly Stock: Three to five working days

Modified Stock ④: Five to seven working days

Standard: 10 working days

Made-to-Order: Four to six weeks

Options, complexity and quantity may affect availability and lead times. Consult factory.

④ Stock and assembly stock units with catalog options.

Tubular and Process Assemblies

Quick Ship

On stock chart units:
- *Five working days on all heaters*
- *10 working days on special voltages and/or wattages*
- *15 working days on special element lengths*

Screw Plug Immersion Heaters

with Control Assembly

Constructed from a WATROD screw plug heater, a moisture resistant (NEMA 4) terminal enclosure and built-in temperature sensor and power control, this assembly comes pre-wired and ready for hook-up to any 120V~(ac) control circuit.

Optional sheath materials, NPT screw plug sizes and materials, wattages, voltages and terminal enclosures extend application versatility.

Performance Capabilities

- Watt densities to 60 W/in^2 (9.3 W/cm^2)
- Wattages to 20kW
- Voltages to 600V~(ac)
- Incoloy® sheath temperatures to 1400°F (760°C)

Features and Benefits

- **Three 0.475 inch (12 mm) diameter WATROD elements** are brazed to a two inch NPT brass screw plug to produce a pressure-tight seal.
- **WATROD hairpins are repressed (recompacted)** after bending to maintain MgO density, dielectric strength, heat transfer and life.
- **Two built-in thermostats**, one on-off with manual reset, help ensure safe operation by automatically cycling on and off when process or sheath temperatures reach a predetermined set point selectable from 30° to 250°F (0° to 120°C).
- **Internal mechanical contactor** works on a 120V~(ac) control circuit to switch higher volts/amps to the heating elements.

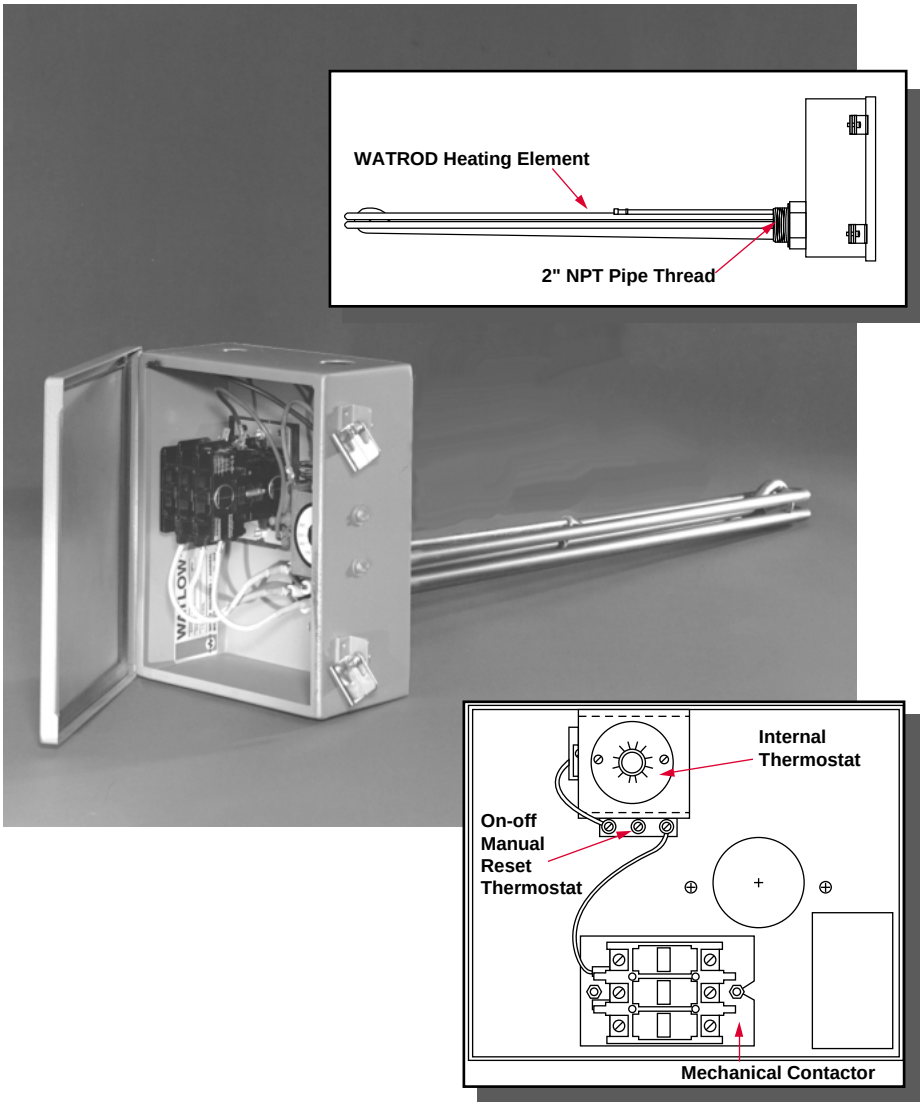

- **Hinged, moisture resistant (NEMA 4) terminal enclosure** has two conduit openings to accommodate ¾ inch NPT conduit fittings.
- **Terminal enclosures can be rotated** to mate with existing conduits.
- **Thermowells** allow replacing the thermostat sensing element without draining the fluid being heated.

Applications

- Water heating
- Commercial dishwashers and glass washers
- Sterilizing equipment

Construction Features

Same as ***Screw Plug Immersion Heaters***. See **pages 321 to 322** for details.

Application Hints

Same as ***Screw Plug Immersion Heaters***. See **page 326** for details.

Accessories

Clamping Nut, Gasket and Washers– for mounting to thin-wall tanks, use optional clamping nut, gasket and washers. To order, specify **NGW**.

Tubular and Process Assemblies

Screw Plug Immersion Heaters

with Control Assembly

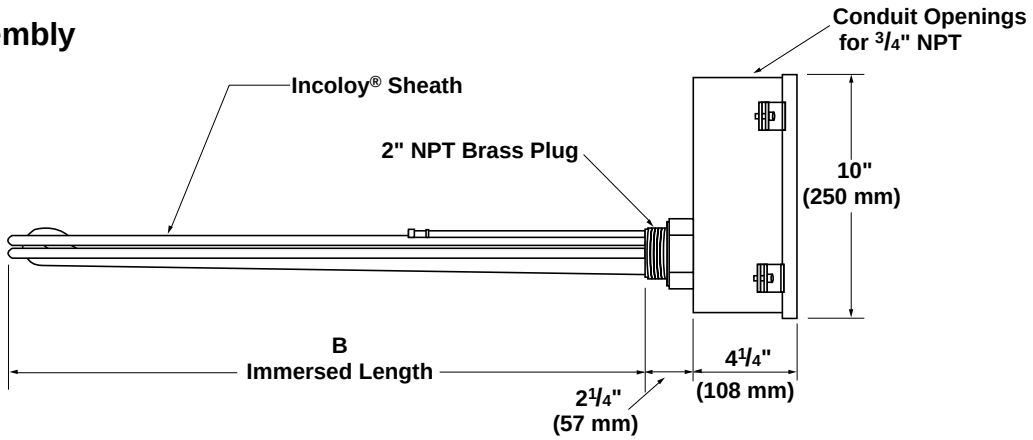

2" NPT Brass Screw Plug With Control Box (Assembly Stock)

WATROD Descript.	kW	Immersed Length Inch (mm)	Code Number 208V~(ac) 3-Phase	240V~(ac) 3-Phase	380V~(ac) 3-Phase	480V~(ac) 3-Phase	575V~(ac) 3-Phase	Est.Net Weight lbs (kg)
50 W/in²	9	24¾ (629)		**BHNB24N3W2C11**		**BHNB24N5W2C11**	**BHNB24N16W2C11**	23 (10)
Brass Plug	12	30 (762)	**BHNB30A2W2C11**	**BHNB30A3W2C11**	**BHNB30A8W2C11**	**BHNB30A5W2C11**	**BHNB30A16W2C11**	24 (11)
3-Incoloy®	16	35⅝ (905)	**BHNB35L2W2C11**	**BHNB35L3W2C11**	**BHNB35L8W2C11**	**BHNB35L5W2C11**	**BHNB35L16W2C11**	25 (11)
(7.8 W/cm²)	20	45⅝ (1159)		**BHNB45L3W2C11**	**BHNB45L8W2C11**	**BHNB45L5W2C11**	**BHNB45L16W2C11**	27 (12)

How to Order

To order an Assembly Stock unit, please specify:

- Watlow code number
- Volts/watts
- Options, if applicable
- Quantity

If our assembly stock units do not meet your application needs, Watlow can provide **made-to-order** assemblies. For made-to order units, please specify:

- Volts/watts
- Phase
- Screw plug size and materials
- Number of elements
- Sheath material
- Immersed ('B' dimension) length
- No-heat section below the plug
- Options
- Quantity

Availability

Assembly Stock: Five working days

Modified Stock ①: Five to seven working days

Made-to-Order: Four to six weeks

Options, complexity and quantity may affect availability and lead times. Consult factory.

Replacement Heater Only

To order a replacement screw plug heater, simply delete the last five characters from the original *Screw Plug Immersion with Control Assembly* base code number.

① Assembly Stock units with catalog options.

Tubular and Process Assemblies

Quick Ship

On stock chart units:
- *Three to five working days on most heaters*
- *10 working days on special voltages and/or wattages*
- *15 working days on special element lengths*

Flange Immersion Heaters

Watlow flange heaters are easy to install and maintain. Designed for heating liquids and gases in tanks and pressure vessels, flange immersion heaters are ideal for applications requiring higher kilowatts.

Watlow flange heaters are made with WATROD or FIREBAR® tubular elements brazed or welded to a flange. Stock flange heaters are equipped with a general purpose (NEMA 1) terminal enclosure.

Flange heaters, with FIREBAR elements, also answer the need for liquid immersion applications requiring high kilowatts in small tanks. The FIREBAR element's unique flat surface geometry packs more power in a smaller bundle, with lower watt density, making it especially well suited for petroleum-based liquid heating applications.

Performance Capabilities

- Watt densities to 100 W/in^2 (15.5 W/cm^2)
- Wattages to one megawatt
- UL® and CSA component recognition to 480V~(ac) and 600V~(ac) respectively
- Incoloy® sheath temperatures to 1600°F (870°C)
- Passivated 316 stainless steel sheath temperatures to 1200°F (650°C)
- 304 stainless steel sheath temperatures to 1200°F (650°C)
- Steel sheath temperatures to 750°F (400°C)
- Copper sheath temperatures to 350°F (175°C)

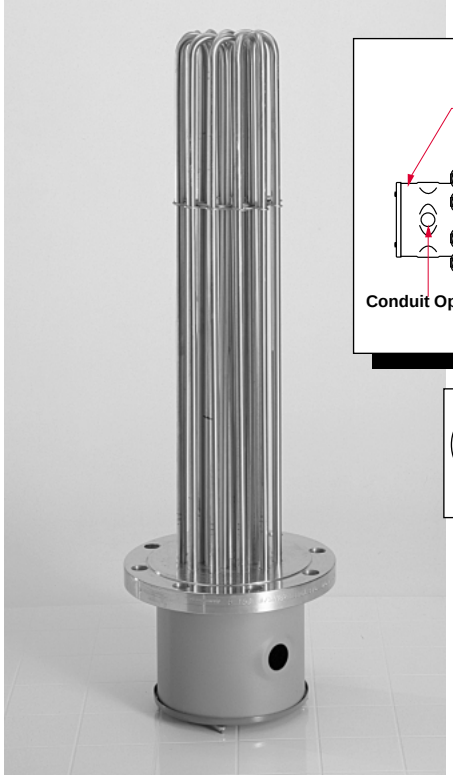

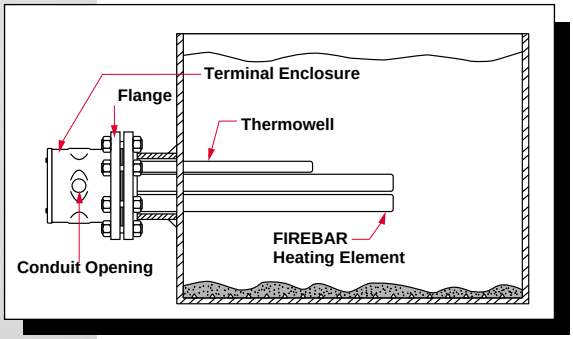

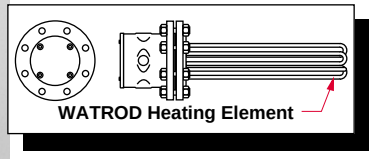

Features and Benefits

- **ANSI and ANSI compatible 2, 2½, 3, 4, 5, 6, 8, 10, 12 and 14 inch flanges** provide appropriate heater size-to-application and fit.
- **Flange sizes up to 24 inches** available on made-to-order units.
- **Element sheath and flange materials** to meet application needs.
- **Integral thermowells** provide convenient temperature sensor insertion and replacement without draining the fluid being heated.
- **A standard, general purpose (NEMA 1) terminal enclosure** offers easy access to wiring.
- **Element support(s)** provide proper element spacing to maximizing heater performance and life.
- **To facilitate lifting**, drilled and tapped holes come supplied for eye bolts on 10 inch and larger flange heaters.
- **All units are inspected and/or tested** to ensure element-to-flange pressure seals do not leak.
- **Four or six inch FIREBAR flange heaters** pack more kilowatts in smaller bundles—in liquid immersion applications, a conventional 10 inch round tubular element flange can be replaced with a six inch FIREBAR flange.
- **WATROD hairpins are repressed (recompacted)** to maintain MgO density, dielectric strength, heat transfer and life.
- **Branch circuits meet NEC** with 48 amps per circuit maximum.
- **UL® and CSA component recognition** under file numbers E52951 and 31388 respectively. See **pages 268-271** for details.

Flange Immersion Heaters

Applications

- Water:
  - Deionized
  - Demineralized
  - Clean
  - Potable
  - Process
- Industrial water rinse tanks
- Vapor degreasers
- Hydraulic oil, crude, asphalt
- Lubricating oils at API specified watt densities
- Air and gas flow
- Caustic solutions
- Chemical baths
- Process air equipment
- Boiler equipment
- Freeze protection of any fluid
- Anti-freeze (glycol) solutions
- Paraffin

Options

Terminal Enclosures

General purpose terminal enclosures, without thermostats, are standard on all flange immersion heaters. Optional terminal enclosures include:

- General purpose (NEMA 1) with a single or double pole thermostat.
- Moisture resistant (NEMA 4–steel). Available with or without a single or double pole thermostat.
- Corrosion resistant (NEMA 4X). Available with or without a single or double pole thermostat.
- Explosion resistant (NEMA 7) class 1 groups C and D. Available with or without a single or double pole thermostat.
- Explosion/moisture resistant (NEMA 7/4) combinations. Available with or without a single or double pole thermostat.
- For class 1, group B enclosures, consult your Watlow representative.

Enclosure Enhancements

- Enclosure heater to solve condensation and freeze problems.
- Power distribution blocks to facilitate power feed line wiring.

Prior to ordering, refer to the terminal enclosure dimensions on **page 341**. Order by adding the appropriate suffix letter(s) to the base flange heater code number, as shown on the Build-a-Code chart. Heater code numbers and suffix letters are depicted on the *Stock* and *Options* charts, **pages 345 to 362**. Specify class and group, if applicable.

Caution

Explosion-resistant terminal enclosures are intended to provide explosion containment in the electrical termination/wiring enclosure only. No portion of the assembly outside of this enclosure is covered under this NEMA rating. NEMA rating effectiveness may be compromised by abuse or misapplication.

Stand-off Terminal Enclosures

Stand-off terminal enclosures provide an air-insulating barrier between the flange and terminal enclosure by mounting the terminations and wiring away from the flange. Stand-off terminal enclosures are recommended whenever a process operating temperature exceeds 400°F (205°C). This helps minimize terminal enclosure temperatures.

To order, specify **stand-off terminal enclosure**.

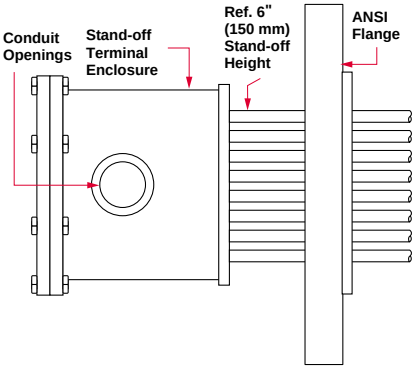

CSA Certified Enclosures

CSA certified moisture and/or explosion resistant terminal enclosures protect wiring in hazardous gas environments. These terminal enclosures, covered under CSA file number 61707, are available on all WATROD and FIREBAR flange heaters. For additional information, consult your Watlow representative.

To order, specify **CSA certified enclosure**, **process temperature** (°F), maximum **working pressure** of application (psig), **media** being heated and heater **mounting orientation** (horizontal or vertical) and **flange size**.

Tubular and Process Assemblies

Flange Immersion Heaters
Options

4-8 inches NEMA 1 and NEMA 4

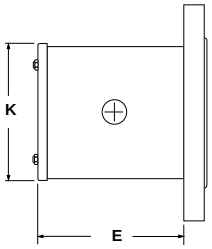

10-14 inches NEMA 1

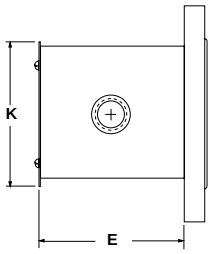

10-14 inches NEMA 4

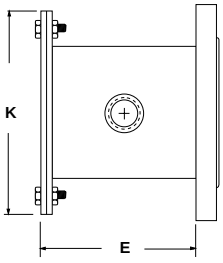

4-14 inches NEMA 7

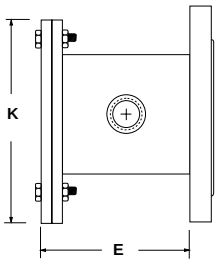

Terminal Enclosure Dimensions

Enclosure Type	Flange Size inch	Without Thermostat				With Thermostat							
						Single Pole				Double Pole			
		E Dimension inch	(mm)	K Dimension inch	(mm)	E Dimension inch	(mm)	K Dimension inch	(mm)	E Dimension inch	(mm)	K Dimension inch	(mm)
General	2①	1 ½	(38)	3 ⅜	(86)	—	—	—	—	—	—	—	—
Purpose	2½①	2 ⅛	(54)	4	(102)	—	—	—	—	—	—	—	—
(NEMA 1)	3	3 13/16	(97)	4 ⅝	(117)	9 ⅜	(238)	7	(178)	9 ⅜	(238)	7	(178)
	4	9 ⅜	(238)	7	(178)	9 ⅜	(238)	7	(178)	9 ⅜	(238)	7	(178)
	5	7 1/16	(179)	7	(178)	7 1/16	(179)	7	(178)	7 1/16	(179)	7	(178)
	6	7 1/16	(179)	8	(203)	7 1/16	(179)	8	(203)	7 1/16	(179)	8	(203)
	8	7 1/16	(179)	10 1/32	(255)	7 1/16	(179)	10 1/32	(255)	7 1/16	(179)	10 1/32	(255)
	10	7 1/16	(179)	11 ⅝	(295)	7 1/16	(179)	11 ⅝	(295)	7 1/16	(179)	11 ⅝	(295)
	12	7 1/16	(179)	13 ½	(343)	7 1/16	(179)	13 ½	(343)	7 1/16	(179)	13 ½	(343)
	14	7 1/16	(179)	15 ⅛	(384)	7 1/16	(179)	15 ⅛	(384)	7 1/16	(179)	15 ⅛	(384)
Moisture	2	2 ⅝	(67)	3 ½	(89)	—	—	—	—	—	—	—	—
Resistant	2 ½	2 ⅝	(67)	3 ½	(89)	—	—	—	—	—	—	—	—
(NEMA 4)	3	2 ⅛	(54)	4	(102)	9 ⅜	(238)	7	(178)	9 ⅜	(238)	7	(178)
	4	9 ⅜	(238)	7	(178)	9 ⅜	(238)	7	(178)	9 ⅜	(238)	7	(178)
	5	7 1/16	(179)	7	(178)	7 1/16	(179)	7	(178)	7 1/16	(179)	7	(178)
	6	7 1/16	(179)	8	(203)	7 1/16	(179)	8	(203)	7 1/16	(179)	8	(203)
	8	7 1/16	(179)	10 1/32	(255)	7 1/16	(179)	10 1/32	(255)	7 1/16	(179)	10 1/32	(255)
	10	7 ¾	(197)	13 ¾	(349)	7 ¾	(197)	13 ¾	(349)	7 ¾	(197)	13 ¾	(349)
	12	7 ¾	(197)	15 ⅞	(403)	7 ¾	(197)	15 ⅞	(403)	7 ¾	(197)	15 ⅞	(403)
	14	7 ¾	(197)	17 ¼	(438)	7 ¾	(197)	17 ¼	(438)	7 ¾	(197)	17 ¼	(438)
Explosion	2	3 1/16	(78)	3 ¾	(95)	—	—	—	—	—	—	—	—
Resistant	2 ½	3 1/16	(78)	3 ¾	(95)	—	—	—	—	—	—	—	—
(NEMA 7)	3	7 ⅛	(181)	5 ¾	(146)	7 ⅛	(181)	5 ¾	(146)	7 ⅛	(181)	5 ¾	(146)
Class 1,	4	7 ⅛	(181)	5 ¾	(146)	7 ⅛	(181)	5 ¾	(146)	7 ⅛	(181)	5 ¾	(146)
Groups	5	7 ⅞	(200)	8 ⅞	(225)	7 ⅞	(200)	8 ⅞	(225)	7 ⅞	(200)	8 ⅞	(225)
C and D	6	7 ⅞	(200)	9 ⅞	(251)	7 ⅞	(200)	9 ⅞	(251)	7 ⅞	(200)	9 ⅞	(251)
Consult	8	7 ⅞	(200)	12 ⅛	(308)	7 ⅞	(200)	12 ⅛	(308)	7 ⅞	(200)	12 ⅛	(308)
Factory	10	7 ⅞	(200)	14 ⅝	(371)	7 ⅞	(200)	14 ⅝	(371)	7 ⅞	(200)	14 ⅝	(371)
for	12	7 ⅞	(200)	15 ⅞	(403)	7 ⅞	(200)	15 ⅞	(403)	7 ⅞	(200)	15 ⅞	(403)
Group B)	14	7 ⅞	(200)	19 ⅜	(492)	7 ⅞	(200)	19 ⅜	(492)	7 ⅞	(200)	19 ⅜	(492)

① Terminal enclosure is octagonal, not round.

Flange Immersion Heaters
Options

Thermostats

To provide process temperature control, Watlow offers optional single pole, single throw (SPST) and double pole, single throw (DPST) thermostats.

Unless otherwise specified, thermostats are mounted inside the terminal enclosure. For details and ordering information, refer to ***Thermostats*** on **pages 423 to 425**. Please verify that the thermostat's sensing bulb O.D. is compatible with the flange heater's thermowell I.D.

Thermocouples

ASTM Type J or K thermocouples offer more accurate sensing of process and/or sheath temperatures. A thermocouple may be inserted into the thermowell or attached to the heater's sheath.

Thermocouples are supplied with 120 inch (3050 mm) leads (longer lead lengths available). Unless otherwise specified, thermocouples are supplied with temperature ranges detailed on the *Thermocouple Types* chart.

Using a thermocouple requires an appropriate temperature and power control. These must be purchased separately. Watlow offers a wide variety of temperature and power controls to meet virtually all applications. Temperature controls can be configured to accept process variable inputs, too.

Consult your Watlow representative for details.

To order, specify **Type J** or **K** thermocouple and lead length. Indicate if the thermocouple is for **process temperature sensing** or heater sheath **high-limit protection**. Please specify if the flange heater will be mounted **vertical** or **horizontal** in the tank. **If vertical, specify if the housing is on top or bottom**.

If the flange heater is part of an in-line circulation heating application, indicate flow direction relative to the heater's enclosure.

RTDs

If your process requires greater temperature sensing accuracy than is possible with thermocouples, Watlow can also supply RTDs in DIN or JIS calibrations. Consult Watlow for details.

Thermocouple Types

ASTM Type	Conductor Characteristics Positive	Conductor Characteristics Negative	Recommended① Temperature Range °F	Recommended① Temperature Range (°C)
J	Iron (Magnetic)	Constantan (Non-magnetic)	0 to 1000	(-20 to 540)
K	Chromel® (Non-magnetic)	Alumel® (Magnetic)	0 to 2000	(-20 to 1100)

① Type J and Type K thermocouples are rated 32 to 1382°F and 32 to 2282°F (0-750°C and 0-1250°C), respectively. Watlow does not recommend exceeding temperature ranges shown on this chart for the tubular product line.

Wattages and Voltages

Watlow routinely supplies flange immersion heaters with 240 to 480V~(ac) as well as wattages from 150 watts to one megawatt. If required, Watlow will make heaters with voltage up to 600V~(ac) and wattage beyond one megawatt. For more information on special voltage and wattage configurations, consult your Watlow representative.

Branch Circuits

Branch circuits are subdivided by National Electrical Code (NEC) requirements to a maximum of 48 amps per circuit. Consult factory for circuit requirements other than those listed in the stock charts.

Tubular and Process Assemblies

Flange Immersion Heaters

Options

Sheath Materials

The following sheath materials are available on WATROD and FIREBAR flange heaters:

Standard Sheath Materials

WATROD	Incoloy® 316 stainless steel Steel Copper
FIREBAR	Incoloy®

Made-to-Order Sheath Materials

WATROD	304 stainless steel Monel®
FIREBAR	304 stainless steel

Exotic Sheath Materials

Consult your Watlow representative for details and availability.

External Finishing

Passivation

During the manufacturing process, particles of iron or tool steel may become embedded in the stainless steel or alloy sheath. If not removed, these particles may corrode, produce rust spots and/or contaminate the process. For critical sheath applications, passivation will remove free iron from the sheath. To order, specify **passivation**.

Other Finishes

Simple belt polishing and glass beading are available to meet cosmetic demands. Consult factory for details.

Flanges

Flange Sizes and Styles

Standard: 2①, 2½①, 3, 4, 5, 6, 8, 10, 12 and 14 inch ANSI raised face/blind flanges.

Made-to-Order: 16, 18, 20 and 24 inch in any recognized configuration, as well as customer specified. Over 24 inch, consult Watlow Process Systems.

Flange Materials

Standard	Carbon steel 316 stainless steel 304 stainless steel
Made-to-Order	Exotic materials to meet specific application needs②

Pressure Classes

Standard	150 lb
Made-to-Order	300 lb 600 lb Over 600 lb②

Gaskets

Rubber, asbestos-free and spiral wound gaskets are available for all flange sizes. Order by specifying gasket type, flange size/rating, process operating temperature and pressure.

To make the correct selection, see the *Gasket Selection* chart.

It provides a recommended gasket type and effective temperature rating.

To use this chart, multiply operating temperature by the operating pressure to arrive at "Maximum PSIG X °F." This is listed in the chart's first column.

Gasket Selection

Maximum PSIG X °F	Gasket Temperature °F	Gasket Type
Up to 15,000	300	Rubber
Over 250,000	700	Asbestos-Free
Over 250,000	③	Spiral Wound

③ Depends on metal gasket material.

Baffles

For forced circulation applications, baffles can be arranged on the heating element bundle to enhance and/or modify fluid or gas flow for better heat transfer.

For open tank or convection heating applications, standard element supports will be supplied.

To order, specify **baffles**.

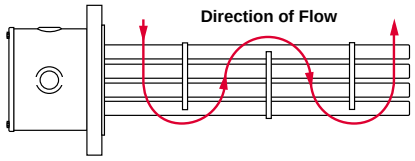

① ANSI compatible only.
② Consult Watlow Process Systems in Troy, Missouri.

Monel® is a registered trademark of Special Metals Corporation.

Tubular and Process Assemblies

Flange Immersion Heaters

Application Hints

- Select the recommended heating element sheath material and watt density for the substance being heated. Use the ***Supplemental Applications Chart*** on **pages 263 to 266**. If unable to determine the correct heating element sheath material and type, consult your Watlow representative.
- Extend the element no-heat section completely into the fluid being heated to help prevent premature heater failure. See accompanying illustration for proper no-heat section placement.
- Locate flange heater low in the tank, but above the sludge level.

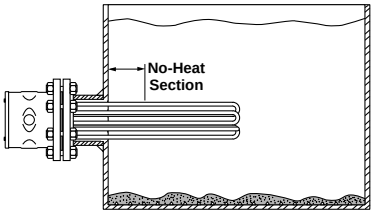

- Choose a FIREBAR element when your application requires a smaller system package or lower watt density.
- Ensure wiring integrity by keeping terminal enclosure temperature below 400°F (205°C).
- Keep electrical connections clean, dry and tight.
- Minimize problems associated with low liquid level conditions by using low liquid level sensor or sheath temperature high-limit control.
- Periodically remove the flange assembly to inspect and clean the heating element(s). This preventive maintenance will reduce premature failure and optimize heater performance.
- Refer to the *Installation and Maintenance Instructions* for correct orientation of FIREBAR elements. This is important in air applications with customer supplied circulation tanks. Correct element orientation to flow minimizes pressure drop, increases buoyancy force and heater performance.

Flange Immersion Heater

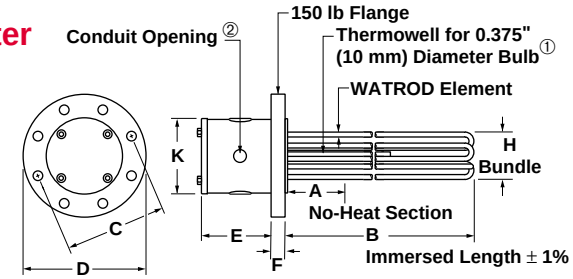

For terminal enclosure dimensions (K and E) see page 341.

Flange Immersion Heater Dimensions

Element Type	Flange Size in	Flange Mounting Hole Size in	(mm)	Flange Mounting Hole Number	Thermowell Length in	(mm)	A Dimension in	(mm)	C Dimension in	(mm)	D Dimension in	(mm)	F Dimension in	(mm)	H Dimension in	(mm)	Number of Elements Std	Max
WATROD	2①	¾	(19)	4	—	—	2	(51)	4¾	(121)	6	(152)	9/16	(14)	2	(51)	3	3
WATROD	2½①	¾	(19)	4	—	—	3	(76)	5½	(140)	7	(178)	⅜	(10)	2¼	(57)	3	3
WATROD	3	¾	(19)	4	12	(305)	4	(102)	6	(152)	7½	(191)	15/16	(24)	2¾	(70)	3	6
WATROD	4	¾	(19)	8	12	(305)	4	(102)	7½	(191)	9	(229)	15/16	(24)	3⅞	(98)	6	6
WATROD	5	⅞	(22)	8	12	(305)	4	(102)	8½	(216)	10	(254)	15/16	(24)	5	(127)	6	9
WATROD	6	⅞	(22)	8	12	(305)	4	(102)	9½	(241)	11	(279)	1	(25)	6	(152)	12	15
WATROD	8	⅞	(22)	8	18	(457)	6	(152)	11¾	(298)	13½	(343)	1⅛	(29)	7 13/16	(198)	18	24
WATROD	10	1	(25)	12	18	(457)	6	(152)	14¼	(362)	16	(406)	1 3/16	(30)	9¾	(248)	27	36
WATROD	12	1	(25)	12	18	(457)	6	(152)	17	(432)	19	(483)	1¼	(32)	11¾	(298)	36	54
WATROD	14	1⅛	(29)	12	18	(457)	6	(152)	18¾	(476)	21	(533)	1⅜	(35)	12¾	(324)	45	72

① Thermowells are not provided on two and 2½ inch units. 150 lb rating is not available on two and 2½ inch stock units.

Note: The number and size of conduit openings will comply with the National Electrical Code standards.

Tubular and Process Assemblies

Flange Immersion Heaters

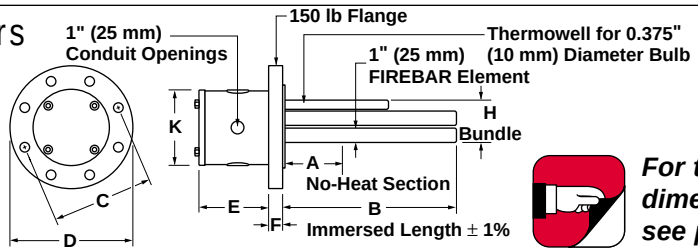

For terminal enclosure dimensions (K and E) see page 341.

Flange Immersion Heater Dimensions

Element Type	Flange Size in	Flange Mounting Hole Size in (mm)	Flange Mounting Hole Number	Thermowell Length in (mm)	A Dimension in (mm)	C Dimension in (mm)	D Dimension in (mm)	F Dimension in (mm)	H Dimension in (mm)	Elements Standard
FIREBAR	4	¾ (19)	8	12 (305)	4 (102)	7½ (191)	9 (229)	15⁄16 (24)	3⅞ (98)	6
FIREBAR	6	⅞ (22)	8	12 (305)	4 (102)	9½ (241)	11 (279)	1 (25)	6 (152)	15

6" O.D. Plate Flange—WATROD Element

WATROD Description	kW	Immersed B Dimension inch (mm)	Code No. 240V~(ac) 1-Phase	Code No. 240V~(ac) 3-Phase	Code No. 480V~(ac) 1-Phase	Code No. 480V~(ac) 3-Phase	Est. Ship. Weight lbs (kg)
Applications: Process Water, Ethylene Glycol (50%)							
45 W/in² **Steel Flange** **3-Copper** (7 W/cm²)	4.5 9	16 (406) 29 (737)	**FKC16A10②** **FKC29A10②**	**FKC16A3②** **FKC29A3**	**FKC16A11②** **FKC29A11②**	**FKC16A5** **FKC29A5**	22 (10) 27 (13)
Application: Process Water							
45 W/in² **Steel Flange** **3-Incoloy®** (7 W/cm²)	9	28 (711)	**FKN28A10②**	**FKN28A3②**	**FKN28A11②**	**FKN28A5**	27 (13)
Applications: Cooking Oils, Ethylene Glycol (100%)							
30 W/in² **Steel Flange** **3-Steel** (4.7 W/cm²)	6	29 (737)	**FKS29A10②**	**FKS29A3②**	**FKS29A11②**	**FKS29A5**	27 (13)
Applications: Medium Weight Oils, Heat Transfer Oils, Liquid Paraffin							
15 W/in² ③ **Steel Flange** **3-Incoloy®** (2.3 W/cm²)	3	28 (711)		**FKN28A12②**		**FKN28A13②**	27 (13)
Applications: Medium Weight Oils, Heat Transfer Oils, Lube Oils, Liquid Paraffin							
10 W/in² ③ **Steel Flange** **3-Steel** (1.6 W/cm²)	2	29 (737)		**FKS29A12②**		**FKS29A13②**	27 (13)

All flange immersion heaters are Assembly Stock unless otherwise noted.

Availability

Stock: Same day shipment

Assembly Stock: Five to seven working days

Standard: 10 working days, depending on size

② Standard

③ Must be operated 3-phase wye

Tubular and Process Assemblies

Flange Immersion Heaters

7" O.D. Plate Flange— WATROD Element

WATROD Description	kW	Immersed B Dimension inch (mm)	Code No. 240V~(ac) 1-Phase	No. of Circuits	240V~(ac) 3-Phase	No. of Circuits	480V~(ac) 1-Phase	No. of Circuits	480V~(ac) 3-Phase	No. of Circuits	Est. Ship. Weight lbs (kg)
Applications: Clean and Potable Water											
100 W/in²	12	18 (457)	**FLN18A10②**	2	**FLN18A3②**	1	**FLN18A11②**	1	**FLN18A5**	1	22 (10)
Steel Flange											
3-304 SS											
(15.5 W/cm²)											
Applications: Clean and Potable Water											
80 W/in²	9	17¾ (451)	**FLN17N10②**	1	**FLN17N3**	1	**FLN17N11②**	1	**FLN17N5②**	1	22 (10)
Steel Flange	18	30 (762)	**FLN30A10②**	2	**FLN30A3**	1	**FLN30A11②**	1	**FLN30A5②**	1	27 (13)
3-304 SS											
(12.4 W/cm²)											
Application: Process Water											
60 W/in²	4.5	12½ (318)	**FLN12J10②**	1	**FLN12J3**	1	**FLN12J11②**	1	**FLN12J5②**	1	21 (10)
Steel Flange											
3-Incoloy®											
(9.3 W/cm²)											
Applications: Cooking Oils, Ethylene Glycol (100%)											
30 W/in²③	3	17¾ (451)			**FLN17N12②**	1			**FLN17N13②**	1	22 (10)
Steel Flange	4	18 (457)			**FLN18A12②**	1			**FLN18A13**	1	22 (10)
3-Incoloy®	6	30 (762)			**FLN30A12**	1			**FLN30A13**	1	27 (13)
(4.7 W/cm²)											

All flange immersion heaters are Assembly Stock unless otherwise noted.

Availability

Stock: Same day shipment

Assembly Stock: Five to seven working days

Standard: 10 working days, depending on size

② Standard

③ Must be operated 3-phase wye

Tubular and Process Assemblies

Flange Immersion Heaters

3" 150 lb ANSI Flange—WATROD Element

WATROD Description	kW	Immersed B Dimension inch (mm)	Code No. 240V~(ac) 1-Phase	No. of Circuits	240V~(ac) 3-Phase	No. of Circuits	480V~(ac) 1-Phase	No. of Circuits	480V~(ac) 3-Phase	No. of Circuits	Est. Ship. Weight lbs (kg)
Application: Clean Water											
60 W/in²	6	15½ (394)	**FMC715J10**	1	**FMC715J3**	1	**FMC715J11**	1	**FMC715J5**	1	22 (10)
Steel Flange	9	21½ (546)	**FMC721J10**	1	**FMC721J3**	1	**FMC721J11**	1	**FMC721J5**	1	25 (12)
3-Copper	12	27 (686)			**FMC727A3**	1	**FMC727A11**	1	**FMC727A5**	1	27 (13)
(9.3 W/cm²)	15	32½ (826)			**FMC732J3**	1	**FMC732J11**	1	**FMC732J5**	1	28 (13)
	18	38 (965)			**FMC738A3**	1	**FMC738A11**	1	**FMC738A5**	1	30 (14)
	25	51 (1295)					**FMC751A11**	1	**FMC751A5**	1	34 (16)
	30	60½ (1537)					**FMC760J11②**	1	**FMC760J5②**	1	36 (17)
Application: Process Water											
48 W/in² ⑤⑥	4.5	13½ (343)	**FMN713J10**	1	**FMN713J3**	1	**FMN713J11**	1	**FMN713J5**	1	22 (10)
Steel Flange	6	18 (457)	**FMN718A10**	1	**FMN718A3**	1	**FMN718A11**	1	**FMN718A5**	1	23 (11)
3-Incoloy®	7.5	20½ (521)	**FMN720J10**	1	**FMN720J3**	1	**FMN720J11**	1	**FMN720J5**	1	25 (12)
(7.5 W/cm²)	9	25½ (648)	**FMN725J10**	1	**FMN725J3**	1	**FMN725J11**	1	**FMN725J5**	1	27 (13)
	12	33 (838)			**FMN733A3**	1	**FMN733A11**	1	**FMN733A5**	1	28 (13)
	15	40½ (1029)			**FMN740J3**	1	**FMN740J11**	1	**FMN740J5**	1	30 (14)
	18	48 (1219)			**FMN748A3**	1	**FMN748A11**	1	**FMN748A5**	1	32 (15)
Applications: Forced Air and Gases, Caustic Solutions, Degreasing Solutions											
23 W/in² ⑤⑥	3	18 (457)	**FMNA18A10**	1	**FMNA18A3**	1	**FMNA18A11**	1	**FMNA18A5**	1	23 (11)
Steel Flange	4.5	25½ (648)	**FMNA25J10**	1	**FMNA25J3**	1	**FMNA25J11**	1	**FMNA25J5**	1	27 (13)
3-Incoloy®	6	33 (838)	**FMNA33A10**	1	**FMNA33A3**	1	**FMNA33A11**	1	**FMNA33A5**	1	28 (13)
(3.6 W/cm²)	7.5	40½ (1029)	**FMNA40J10**	1	**FMNA40J3**	1	**FMNA40J11**	1	**FMNA40J5**	1	30 (14)
	9	48 (1219)	**FMNA48A10**	1	**FMNA48A3**	1	**FMNA48A11**	1	**FMNA48A5**	1	32 (15)
	12.5	64½ (1638)			**FMNA64J3**	1	**FMNA64J11**	1	**FMNA64J5**	1	37 (17)
	15	77 (1956)			**FMNA77A3**	1	**FMNA77A11**	1	**FMNA77A5**	1	42 (19)
Applications: Lightweight Oils, Degreasing Solutions, Heat Transfer Oils											
23 W/in²	3	18 (457)	**FMS718A10**	1	**FMS718A3**	1	**FMS718A11**	1	**FMS718A5**	1	23 (11)
Steel Flange	4.5	25½ (648)	**FMS725J10**	1	**FMS725J3**	1	**FMS725J11**	1	**FMS725J5**	1	27 (13)
3-Steel	6	33 (838)	**FMS733A10**	1	**FMS733A3**	1	**FMS733A11**	1	**FMS733A5**	1	28 (13)
(3.6 W/cm²)	7.5	40½ (1029)	**FMS740J10**	1	**FMS740J3**	1	**FMS740J11**	1	**FMS740J5**	1	30 (14)
	9	48 (1219)	**FMS748A10**	1	**FMS748A3**	1	**FMS748A11**	1	**FMS748A5**	1	32 (15)
	12.5	64½ (1638)			**FMS764J3**	1	**FMS764J11**	1	**FMS764J5**	1	37 (17)
	15	77 (1956)			**FMS777A3**	1	**FMS777A11**	1	**FMS777A5**	1	42 (19)

CONTINUED

All flange immersion heaters are Assembly Stock unless otherwise noted.

Availability

Stock: Same day shipment

Assembly Stock: Five to seven working days

Standard: 10 working days, depending on size

② Standard

⑤ 240V~(ac) 3-phase can be rewired wye to produce ⅓ more kW and watt density when operated at 480V~(ac) 3-phase.

⑥ Can be rewired wye to produce ⅓ of the original kW and watt density (3-phase only).

Tubular and Process Assemblies

Flange Immersion Heaters

3" 150 lb ANSI Flange—WATROD Element

WATROD Description	kW	Immersed B Dimension inch (mm)	Code No. 240V~(ac) 1-Phase	No. of Circuits	240V~(ac) 3-Phase	No. of Circuits	480V~(ac) 1-Phase	No. of Circuits	480V~(ac) 3-Phase	No. of Circuits	Est. Ship. Weight lbs (kg)
Applications: Medium Weight Oils, Heat Transfer Oils, Liquid Paraffin											
16 W/in²③	1.5	13½ (343)			**FMN713J12**	1			**FMN713J13**	1	22 (10)
Steel Flange	2	18 (457)			**FMN718A12**	1			**FMN718A13**	1	23 (11)
3-Incoloy®	2.5	20½ (521)			**FMN720J12**	1			**FMN720J13**	1	25 (12)
(2.5 W/cm²)	3	25½ (648)			**FMN725J12**	1			**FMN725J13**	1	27 (13)
	4	33 (838)			**FMN733A12**	1			**FMN733A13**	1	30 (14)
	5	40½ (1029)			**FMN740J12**	1			**FMN740J13**	1	30 (14)
	6	48 (1219)			**FMN748A12**	1			**FMN748A13**	1	33 (15)
Applications: Bunker C and #6 Fuel Oils											
8 W/in²③	2	33 (838)			**FMS733A12**	1			**FMS733A13**	1	28 (13)
Steel Flange	3	48 (1219)			**FMS748A12**	1			**FMS748A13**	1	32 (15)
3-Steel	4	64½ (1638)			**FMS764J12**	1			**FMS764J13**	1	37 (17)
(1.3 W/cm²)	5	77 (1956)			**FMS777A12**	1			**FMS777A13**	1	42 (19)

4" 150 Lb ANSI Flange—WATROD Element

WATROD Description	kW	Immersed B Dimension inch (mm)	Code No. 240V~(ac) 1-Phase	No. of Circuits	240V~(ac) 3-Phase	No. of Circuits	480V~(ac) 1-Phase	No. of Circuits	480V~(ac) 3-Phase	No. of Circuits	Est. Ship. Weight lbs (kg)
Application: Clean Water											
60 W/in²	12	15½ (394)	**FOC715J10**	2	**FOC715J3**	1	**FOC715J11**	1	**FOC715J5**	1	31 (14)
Steel Flange	18	21½ (546)	**FOC721J10**	2	**FOC721J3**	1	**FOC721J11**	1	**FOC721J5**	1	34 (16)
6-Copper	24	27 (686)	**FOC727A10**	2	**FOC727A3**	2	**FOC727A11**	1	**FOC727A5**	1	36 (17)
(9.3 W/cm²)	30	32½ (826)			**FOC732J3**	2	**FOC732J11**	2	**FOC732J5**	1	39 (18)
	36	38 (965)			**FOC738A3**	2	**FOC738A11**	2	**FOC738A5**	1	43 (20)
	50	51 (1295)							**FOC751A5**	2	48 (22)
	60	60½ (1537)							**FOC760J5②**	2	52 (24)
Application: Deionized Water, Demineralized Water											
60 W/in²	12	16 (406)	**FOR716A10**	1	**FOR716A3**	1	**FOR716A11**	1	**FOR716A5**	1	31 (14)
316 SS Flange	18	22 (559)	**FOR722A10**	2	**FOR722A3**	1	**FOR722A11**	1	**FOR722A5**	1	34 (16)
6-316 SS	24	27½ (699)	**FOR727J10**	2	**FOR727J3**	2	**FOR727J11**	1	**FOR727J5**	1	36 (17)
(9.3 W/cm²)	30	33 (838)			**FOR733A3**	2	**FOR733A11**	2	**FOR733A5**	1	39 (18)
Passivated	36	38½ (978)			**FOR738J3**	2	**FOR738J11**	2	**FOR738J5**	1	43 (20)
	50	51½ (1308)							**FOR751J5**	2	53 (25)
	60	61 (1549)							**FOR761A5**	2	56 (26)

CONTINUED

All flange immersion heaters are Assembly Stock unless otherwise noted.

Availability

Stock: Same day shipment

Assembly Stock: Five to seven working days

Standard: 10 working days, depending on size

② Standard

③ Must be operated 3-phase wye

Tubular and Process Assemblies

Flange Immersion Heaters

4" 150 lb ANSI Flange—WATROD Element

WATROD Description	kW	Immersed B Dimension inch (mm)	Code No. 240V~(ac) 1-Phase	No. of Circuits	240V~(ac) 3-Phase	No. of Circuits	480V~(ac) 1-Phase	No. of Circuits	480V~(ac) 3-Phase	No. of Circuits	Est. Ship. Weight lbs (kg)
Application: Process Water											
48 W/in²⑤	9	13½ (343)	**FON713J10**	1	**FON713J3**	1	**FON713J11**	1	**FON713J5**	1	29 (14)
Steel Flange	12	18 (457)	**FON718A10**	2	**FON718A3**	1	**FON718A11**	1	**FON718A5**	1	32 (15)
6-Incoloy®	15	20½ (521)	**FON720J10**	2	**FON720J3**	1	**FON720J11**	1	**FON720J5**	1	34 (16)
(7.5 W/cm²)	18	25½ (648)	**FON725J10**	2	**FON725J3**	1	**FON725J11**	1	**FON725J5**	1	36 (17)
	24	33 (838)	**FON733A10**	2	**FON733A3**	2	**FON733A11**	1	**FON733A5**	1	39 (18)
	30	40½ (1029)			**FON740J3**	2	**FON740J11**	2	**FON740J5**	1	43 (20)
	36	48 (1219)			**FON748A3**	2	**FON748A11**	2	**FON748A5**	1	48 (22)
Applications: Forced Air and Gases, Caustic Solutions, Degreasing Solutions											
23 W/in²⑤⑥	6	18 (457)	**FONA18A10**	1	**FONA18A3**	1	**FONA18A11**	1	**FONA18A5**	1	32 (15)
Steel Flange	9	25½ (648)	**FONA25J10**	1	**FONA25J3**	1	**FONA25J11**	1	**FONA25J5**	1	36 (17)
6-Incoloy®	12	33 (838)	**FONA33A10**	2	**FONA33A3**	1	**FONA33A11**	1	**FONA33A5**	1	39 (18)
(3.6 W/cm²)	15	40½ (1029)	**FONA40J10**	2	**FONA40J3**	1	**FONA40J11**	1	**FONA40J5**	1	43 (20)
	18	48 (1219)	**FONA48A10**	2	**FONA48A3**	1	**FONA48A11**	1	**FONA48A5**	1	48 (22)
	25	64½ (1638)			**FONA64J3**	2	**FONA64J11**	2	**FONA64J5**	1	53 (24)
	30	77 (1956)			**FONA77A3**	2	**FONA77A11**	2	**FONA77A5**	1	61 (28)
Applications: Lightweight Oils, Degreasing Solutions, Heat Transfer Oils											
23 W/in²	6	18 (457)	**FOS718A10**	1	**FOS718A3**	1	**FOS718A11**	1	**FOS718A5**	1	32 (15)
Steel Flange	9	25½ (648)	**FOS725J10**	1	**FOS725J3**	1	**FOS725J11**	1	**FOS725J5**	1	36 (17)
6-Steel	12	33 (838)	**FOS733A10**	2	**FOS733A3**	1	**FOS733A11**	1	**FOS733A5**	1	39 (18)
(3.6 W/cm²)	15	40½ (1029)	**FOS740J10**	2	**FOS740J3**	1	**FOS740J11**	1	**FOS740J5**	1	43 (20)
	18	48 (1219)	**FOS748A10**	2	**FOS748A3**	1	**FOS748A11**	1	**FOS748A5**	1	48 (22)
	25	64½ (1638)			**FOS764J3**	2	**FOS764J11**	2	**FOS764J5**	1	53 (24)
	30	77 (1956)			**FOS777A3**	2	**FOS777A11**	2	**FOS777A5**	1	61 (28)
Applications: Medium Weight Oils, Heat Transfer Oils, Liquid Paraffin											
16 W/in²③	3	13½ (343)			**FON713J12**	1			**FON713J13**	1	29 (14)
Steel Flange	4	18 (457)			**FON718A12**	1			**FON718A13**	1	32 (15)
6-Incoloy®	5	20½ (521)			**FON720J12**	1			**FON720J13**	1	34 (16)
(2.5 W/cm²)	6	25½ (648)			**FON725J12**	1			**FON725J13**	1	36 (17)
	8	33 (838)			**FON733A12**	1			**FON733A13**	1	39 (18)
	10	40½ (1029)			**FON740J12**	1			**FON740J13**	1	43 (20)
	12	48 (1219)			**FON748A12**	1			**FON748A13**	1	48 (22)
Applications: Bunker C and #6 Fuel Oils											
8 W/in²③	5	40½ (1029)			**FOS740J12**	1			**FOS740J13**	1	43 (20)
Steel Flange	6	48 (1219)			**FOS748A12**	1			**FOS748A13**	1	48 (22)
6-Steel	8	64½ (1638)			**FOS764J12**	1			**FOS764J13**	1	53 (24)
(1.3 W/cm²)	10	77 (1956)			**FOS777A12**	1			**FOS777A13**	1	61 (28)

All flange immersion heaters are Assembly Stock unless otherwise noted.

Availability

Stock: Same day shipment

Assembly Stock: Five to seven working days

Standard: 10 working days, depending on size

③ Must be operated 3-phase wye

⑤ 240V~(ac) 3-phase can be rewired wye to produce ⅓ more kW and watt density when operated at 480V~(ac) 3-phase.

⑥ Can be rewired wye to produce ⅓ of the original kW and watt density (3-phase only).

Tubular and Process Assemblies

Flange Immersion Heaters

4" 150 lb ANSI Flange—FIREBAR Element

FIREBAR Description	kW	Immersed B Dimension inch (mm)	Code No. 240V~(ac) 3-Phase	No. of Circuits	480V~(ac) 3-Phase	No. of Circuits	Est. Ship. Weight lbs (kg)
Applications: Process Water, Ethylene Glycol (50%)							
45 W/in²	12	13⅜ (340)	**FONF13G27**	1			32 (20)
304 SS Flange	15	16 (406)	**FONF16A27**	1			35 (20)
6-Incoloy®	18	18⅜ (467)	**FONF18G27**	1			38 (21)
(7 W/cm²)	24	22⅞ (581)	**FONF22R27**	2	**FONF22R28**	1	41 (21)
	30	27⅞ (708)	**FONF27R27**	2	**FONF27R28**	1	44 (20)
	36	32⅞ (835)	**FONF32R27**	2	**FONF32R28**	1	46 (21)
	48	42⅜ (1076)			**FONF42G28**	2	50 (23)
	60	51⅞ (1318)			**FONF51R28**	2	54 (25)
Applications: Cooking Oils, Ethylene Glycol (100%)							
30 W/in²③	10	16½ (420)	**FONF16J12**	1	**FONF16J13**	1	35 (16)
304 SS Flange	13	19½ (495)	**FONF19J12**	1	**FONF19J13**	1	38 (17)
6-Incoloy®	17	24½ (622)	**FONF24J12**	1	**FONF24J13**	1	41 (19)
(4.7 W/cm²)	21	30 (762)	**FONF30A12**	2	**FONF30A13**	1	44 (20)
	25.5	35 (889)	**FONF35A12**	2	**FONF35A13**	1	46 (21)
	34	45½ (1156)	**FONF45J12**	2	**FONF45J13**	1	50 (23)
	43	56 (1422)			**FONF56A13**	2	54 (25)
Applications: Heat Transfer Oils, Mineral Oils, Degreasing Solutions							
23 W/in²⑧	7.5	16½ (419)	**FONF16J20**	1			35 (16)
304 SS Flange	10	19½ (495)	**FONF19J20**	1			38 (18)
6-Incoloy®	12.8	24½ (622)	**FONF24J20**	1	**FONF24J19**	1	41 (19)
(3.6 W/cm²)	15.8	30 (762)	**FONF30A20**	1	**FONF30A19**	1	44 (20)
	19	35 (889)	**FONF35A20**	1	**FONF35A19**	1	46 (21)
	25	45½ (1156)	**FONF45J20**	2	**FONF45J19**	1	50 (23)
	32.3	56 (1422)	**FONF56A20**	2	**FONF56A19**	1	54 (25)
Applications: Medium Weight Oils, Heat Transfer Oils, Lube Oils, Liquid Paraffin							
15 W/in²③	4	13⅜ (340)	**FONF13G29**	1			32 (15)
304 SS Flange	5	16 (406)	**FONF16A29**	1			35 (16)
6-Incoloy®	6	18⅜ (467)	**FONF18G29**	1			38 (18)
(2.3 W/cm²)	8	22⅞ (581)	**FONF22R29**	1	**FONF22R30**	1	41 (19)
	10	27⅞ (708)	**FONF27R29**	1	**FONF27R30**	1	44 (20)
	12	32⅞ (835)	**FONF32R29**	1	**FONF32R30**	1	46 (21)
	16	42⅜ (1076)	**FONF42G29**	1	**FONF42G30**	1	50 (23)
	20	51⅞ (1318)	**FONF51R29**	1	**FONF51R30**	1	54 (25)
Applications: Bunker C and #6 Fuel Oils, Asphalt							
8 W/in²③	2.5	16½ (419)	**FONF16J22**	1			35 (16)
304 SS Flange	3.25	19½ (495)	**FONF19J22**	1			38 (17)
6-Incoloy®	4.25	24½ (622)	**FONF24J22**	1	**FONF24J21**	1	41 (19)
(1.3 W/cm²)	5.25	30 (762)	**FONF30A22**	1	**FONF30A21**	1	44 (20)
	6.38	35 (889)	**FONF35A22**	1	**FONF35A21**	1	46 (21)
	8.5	45½ (1156)	**FONF45J22**	1	**FONF45J21**	1	50 (23)
	10.75	56 (1422)	**FONF56A22**	1	**FONF56A21**	1	54 (25)

All flange immersion heaters are Assembly Stock unless otherwise noted.

Availability

Stock: Same day shipment

Assembly Stock: Five to seven working days

Standard: 10 working days, depending on size

③ Must be operated 3-phase wye

⑧ Can be rewired for 1-phase

Tubular and Process Assemblies

Flange Immersion Heaters

5" 150 lb ANSI Flange—WATROD Element

WATROD Description	kW	Immersed B Dimension inch (mm)	Code No. 240V~(ac) 1-Phase	No. of Circuits	240V~(ac) 3-Phase	No. of Circuits	480V~(ac) 1-Phase	No. of Circuits	480V~(ac) 3-Phase	No. of Circuits	Est. Ship. Weight lbs (kg)
Application: Clean Water											
60 W/in²	12	15½ (394)	**FNC715J10**	2	**FNC715J3**	1	**FNC715J11**	1	**FNC715J5**	1	35 (16)
Steel Flange	18	21½ (546)	**FNC721J10**	2	**FNC721J3**	1	**FNC721J11**	1	**FNC721J5**	1	38 (18)
6-Copper	24	27 (686)	**FNC727A10**	3	**FNC727A3**	2	**FNC727A11**	3	**FNC727A5**	1	40 (19)
(9.3 W/cm²)	30	32½ (826)			**FNC732J3**	2	**FNC732J11**	2	**FNC732J5**	1	43 (20)
	36	38 (965)			**FNC738A3**	2	**FNC738A11**	2	**FNC738A5**	1	47 (22)
	50	51 (1295)							**FNC751A5**	2	52 (24)
	60	60½ (1537)							**FNC760J5**②	2	56 (26)
60 W/in²	18	15½ (394)	**FNC715J10X**	3	**FNC715J3X**	1	**FNC715J11X**	1	**FNC715J5X**	1	38 (18)
Steel Flange	27	21½ (546)	**FNC721J10X**	3	**FNC721J3X**	3	**FNC721J11X**	3	**FNC721J5X**	1	42 (19)
9-Copper	36	27 (686)			**FNC727A3X**	3	**FNC727A11X**	3	**FNC727A5X**	1	45 (21)
(9.3 W/cm²)	45	32½ (826)			**FNC732J3X**	3	**FNC732J11X**	3	**FNC732J5X**	3	48 (22)
	54	38 (965)			**FNC738A3X**	3	**FNC738A11X**	3	**FNC738A5X**	3	53 (24)
	75	51 (1295)							**FNC751A5X**	3	60 (28)
	90	60½ (1537)							**FNC760J5X**②	3	66 (30)
Application: Process Water											
48 W/in²⑤	9	13½ (343)	**FNN713J10**	1	**FNN713J3**	1	**FNN713J11**	1	**FNN713J5**	1	33 (15)
Steel Flange	12	18 (457)	**FNN718A10**	2	**FNN718A3**	1	**FNN718A11**	1	**FNN718A5**	1	36 (17)
6-Incoloy®	15	20½ (521)	**FNN720J10**	2	**FNN720J3**	1	**FNN720J11**	1	**FNN720J5**	1	38 (18)
(7.5 W/cm²)	18	25½ (648)	**FNN725J10**	2	**FNN725J3**	1	**FNN725J11**	1	**FNN725J5**	1	40 (19)
	24	33 (838)	**FNN733A10**	3	**FNN733A3**	2	**FNN733A11**	3	**FNN733A5**	1	43 (20)
	30	40½ (1029)			**FNN740J3**	2	**FNN740J11**	2	**FNN740J5**	1	47 (22)
	36	48 (1219)			**FNN748A3**	2	**FNN748A11**	2	**FNN748A5**	1	52 (24)
48 W/in²	14	13½ (343)	**FNN713J10X**	3	**FNN713J3X**	1	**FNN713J11X**	1	**FNN713J5X**	1	35 (16)
Steel Flange	18	18 (457)	**FNN718A10X**	3	**FNN718A3X**	1	**FNN718A11X**	1	**FNN718A5X**	1	39 (18)
9-Incoloy®	23	20½ (521)	**FNN720J10X**	3	**FNN720J3X**	3	**FNN720J11X**	1	**FNN720J5X**	1	42 (19)
(7.5 W/cm²)	27	25½ (648)	**FNN725J10X**	3	**FNN725J3X**	3	**FNN725J11X**	3	**FNN725J5X**	1	45 (21)
	36	33 (838)			**FNN733A3X**	3	**FNN733A11X**	3	**FNN733A5X**	1	48 (22)
	45	40½ (1029)			**FNN740J3X**	3	**FNN740J11X**	3	**FNN740J5X**	3	53 (24)
	54	48 (1219)			**FNN748A3X**	3	**FNN748A11X**	3	**FNN748A5X**	3	60 (28)
Applications: Forced Air and Gases, Caustic Solutions, Degreasing Solutions											
23 W/in²⑤⑥	6	18 (457)	**FNNA18A10**	1	**FNNA18A3**	1	**FNNA18A11**	1	**FNNA18A5**	1	36 (17)
Steel Flange	9	25½ (648)	**FNNA25J10**	1	**FNNA25J3**	1	**FNNA25J11**	1	**FNNA25J5**	1	40 (19)
6-Incoloy®	12	33 (838)	**FNNA33A10**	2	**FNNA33A3**	1	**FNNA33A11**	1	**FNNA33A5**	1	43 (20)
(3.6 W/cm²)	15	40½ (1029)	**FNNA40J10**	2	**FNNA40J3**	1	**FNNA40J11**	1	**FNNA40J5**	1	47 (22)
	18	48 (1219)	**FNNA48A10**	2	**FNNA48A3**	1	**FNNA48A11**	1	**FNNA48A5**	1	52 (24)
	25	64½ (1638)			**FNNA64J3**	2	**FNNA64J11**	2	**FNNA64J5**	1	57 (26)
	30	77 (1956)			**FNNA77A3**	2	**FNNA77A11**	2	**FNNA77A5**	1	65 (28)

CONTINUED

All flange immersion heaters are Assembly Stock unless otherwise noted.

Availability

Stock: Same day shipment

Assembly Stock: Five to seven working days

Standard: 10 working days, depending on size

② Standard

⑤ 240V~(ac) 3-phase can be rewired wye to produce ⅓ more kW and watt density when operated at 480V~(ac) 3-phase.

⑥ Can be rewired wye to produce ⅓ of the original kW and watt density (3-phase only).

Tubular and Process Assemblies

Flange Immersion Heaters

5" 150 lb ANSI Flange—WATROD Element

WATROD Description	kW	Immersed B Dimension inch (mm)	Code No. 240V~(ac) 1-Phase	No. of Circuits	240V~(ac) 3-Phase	No. of Circuits	480V~(ac) 1-Phase	No. of Circuits	480V~(ac) 3-Phase	No. of Circuits	Est. Ship. Weight lbs (kg)
Applications: Forced Air and Gases, Caustic Solutions, Degreasing Solutions											
23 W/in²	9	18 (457)	**FNNA18A10X**	1	**FNNA18A3X**	1	**FNNA18A11X**	1	**FNNA18A5X**	1	39 (18)
Steel Flange	14	25½ (648)	**FNNA25J10X**	3	**FNNA25J3X**	1	**FNNA25J11X**	1	**FNNA25J5X**	1	45 (21)
9-Incoloy®	18	33 (838)	**FNNA33A10X**	3	**FNNA33A3X**	1	**FNNA33A11X**	1	**FNNA33A5X**	1	48 (22)
(3.6 W/cm²)	23	40½ (1029)	**FNNA40J10X**	3	**FNNA40J3X**	3	**FNNA40J11X**	1	**FNNA40J5X**	1	53 (24)
	27	48 (1219)	**FNNA48A10X**	3	**FNNA48A3X**	3	**FNNA48A11X**	3	**FNNA48A5X**	1	60 (28)
	38	64½ (1638)			**FNNA64J3X**	3	**FNNA64J11X**	3	**FNNA64J5X**	1	68 (31)
	45	77 (1956)			**FNNA77A3X**	3	**FNNA77A11X**	3	**FNNA77A5X**	3	78 (36)
Applications: Lightweight Oils, Degreasing Solutions, Heat Transfer Oils											
23 W/in²	6	18 (457)	**FNS718A10**	1	**FNS718A3**	1	**FNS718A11**	1	**FNS718A5**	1	36 (17)
Steel Flange	9	25½ (648)	**FNS725J10**	1	**FNS725J3**	1	**FNS725J11**	1	**FNS725J5**	1	40 (18)
6-Steel	12	33 (838)	**FNS733A10**	2	**FNS733A3**	1	**FNS733A11**	1	**FNS733A5**	1	43 (20)
(3.6 W/cm²)	15	40½ (1029)	**FNS740J10**	2	**FNS740J3**	1	**FNS740J11**	1	**FNS740J5**	1	47 (22)
	18	48 (1219)	**FNS748A10**	2	**FNS748A3**	3	**FNS748A11**	1	**FNS748A5**①	1	52 (24)
	25	64½ (1638)			**FNS764J3**	2	**FNS764J11**	2	**FNS764J5**	1	57 (26)
	30	77 (1956)			**FNS777A3**	2	**FNS777A11**	2	**FNS777A5**	1	65 (30)
23 W/in²	9	18 (457)	**FNS718A10X**	1	**FNS718A3X**	1	**FNS718A11X**	1	**FNS718A5X**	1	39 (18)
Steel Flange	14	25½ (648)	**FNS725J10X**	3	**FNS725J3X**	1	**FNS725J11X**	1	**FNS725J5X**	1	45 (21)
9-Steel	18	33 (838)	**FNS733A10X**	3	**FNS733A3X**	1	**FNS733A11X**	1	**FNS733A5X**	1	48 (22)
(3.6 W/cm²)	23	40½ (1029)	**FNS740J10X**	3	**FNS740J3X**	3	**FNS740J11X**	1	**FNS740J5X**	1	53 (24)
	27	48 (1219)	**FNS748A10X**	3	**FNS748A3X**	1	**FNS748A11X**	3	**FNS748A5X**	1	60 (28)
	38	64½ (1638)			**FNS764J3X**	3	**FNS764J11X**	3	**FNS764J5X**	1	68 (31)
	45	77 (1956)			**FNS777A3X**	3	**FNS777A11X**	3	**FNS777A5X**	3	78 (36)
Applications: Medium Weight Oils, Heat Transfer Oils, Liquid Paraffin											
16 W/in²③	3	13½ (343)			**FNN713J12**	1			**FNN713J13**	1	36 (17)
Steel Flange	4	18 (457)			**FNN718A12**	1			**FNN718A13**	1	40 (18)
6-Incoloy®	5	20½ (521)			**FNN720J12**	1			**FNN720J13**	1	43 (20)
(2.5 W/cm²)	6	25½ (648)			**FNN725J12**	1			**FNN725J13**	1	47 (22)
	8	33 (838)			**FNN733A12**	1			**FNN733A13**	1	52 (24)
	10	40½ (1029)			**FNN740J12**	1			**FNN740J13**	1	57 (26)
	12	48 (1219)			**FNN748A12**	1			**FNN748A13**	1	65 (30)
16 W/in²③	4.5	13½ (343)			**FNN713J12X**	1			**FNN713J13X**	1	39 (18)
Steel Flange	6	18 (457)			**FNN718A12X**	1			**FNN718A13X**	1	45 (21)
9-Incoloy®	7.5	20½ (521)			**FNN720J12X**	1			**FNN720J13X**	1	48 (22)
(2.5 W/cm²)	9	25½ (648)			**FNN725J12X**	1			**FNN725J13X**	1	53 (24)
	12	33 (838)			**FNN733A12X**	1			**FNN733A13X**	1	60 (28)
	15	40½ (1029)			**FNN740J12X**	1			**FNN740J13X**	1	68 (31)
	18	48 (1219)			**FNN748A12X**	1			**FNN748A13X**	1	78 (36)

CONTINUED

All flange immersion heaters are Assembly Stock unless otherwise noted.

Availability

Stock: Same day shipment

Assembly Stock: Five to seven working days

Standard: 10 working days, depending on size

① Stock

③ Must be operated 3-phase wye

Tubular and Process Assemblies

Flange Immersion Heaters

5" 150 lb ANSI Flange—WATROD Element

WATROD Description	kW	Immersed B Dimension inch (mm)	Code No. 240V~(ac) 1-Phase	No. of Circuits	240V~(ac) 3-Phase	No. of Circuits	480V~(ac) 1-Phase	No. of Circuits	480V~(ac) 3-Phase	No. of Circuits	Est. Ship. Weight lbs (kg)
Applications: Bunker C and #6 Fuel Oils											
8 W/in²③	5	40½ (1029)			**FNS740J12**	1			**FNS740J13**	1	47 (22)
Steel Flange	6	48 (1219)			**FNS748A12**	1			**FNS748A13**	1	52 (24)
6-Steel	8	64½ (1638)			**FNS764J12**	1			**FNS764J13**	1	57 (26)
(1.3 W/cm²)	10	77 (1956)			**FNS777A12**	1			**FNS777A13**	1	65 (30)
8 W/in²③	7.5	40½ (1029)			**FNS740J12X**	1			**FNS740J13X**	1	53 (24)
Steel Flange	9	48 (1219)			**FNS748A12X**	1			**FNS748A13X**	1	60 (28)
9-Steel	12	64½ (1638)			**FNS764J12X**	1			**FNS764J13X**	1	68 (31)
(1.3 W/cm²)	15	77 (1956)			**FNS777A12X**	1			**FNS777A13X**	1	78 (36)

6" 150 lb ANSI Flange—WATROD Element

WATROD Description	kW	Immersed B Dimension inch (mm)	Code No. 240V~(ac) 1-Phase	No. of Circuits	240V~(ac) 3-Phase	No. of Circuits	480V~(ac) 1-Phase	No. of Circuits	480V~(ac) 3-Phase	No. of Circuits	Est. Ship. Weight lbs (kg)
Application: Clean Water											
60 W/in²	24	15⅜ (391)	**FPC715G10**	3	**FPC715G3**	2	**FPC715G11**	2	**FPC715G5**	1	73 (33)
Steel Flange	36	21⅜ (543)	**FPC721G10**	4	**FPC721G3**	2	**FPC721G11**	2	**FPC721G5**	1	78 (36)
12-Copper	48	26⅞ (683)			**FPC726R3**	4	**FPC726R11**	3	**FPC726R5**	2	81 (37)
(9.3 W/cm²)	60	32⅜ (822)			**FPC732G3**	4	**FPC732G11**	3	**FPC732G5**	2	85 (39)
	72	37⅞ (962)			**FPC737R3**	4			**FPC737R5**	2	92 (42)
	100	50⅞ (1292)							**FPC750R5**	4	100 (45)
	120	60⅜ (1534)							**FPC760G5②**	4	110 (50)
60 W/in²	30	15⅜ (391)	**FPC715G10X**	3	**FPC715G3X**	5	**FPC715G11X**	3	**FPC715G5X**	1	76 (35)
Steel Flange	45	21⅜ (543)	**FPC721G10X**	5	**FPC721G3X**	5	**FPC721G11X**	3	**FPC721G5X**	5	82 (38)
15-Copper	60	26⅞ (683)			**FPC726R3X**	5	**FPC726R11X**	3	**FPC726R5X**	5	85 (39)
(9.3 W/cm²)	75	32⅜ (822)			**FPC732G3X**	5	**FPC732G11X**	5	**FPC732G5X**	5	90 (41)
	90	37⅞ (962)			**FPC737R3X**	5			**FPC737R5X**	5	98 (45)
	125	50⅞ (1292)							**FPC750R5X**	5	108 (49)
	150	60⅜ (1534)							**FPC760G5X②**	5	120 (55)
Application: Deionized Water, Demineralized Water											
60 W/in²	24	15¾ (400)	**FPR715N10**	3	**FPR715N3**	2	**FPR715N11**	2	**FPR715N5**	1	73 (33)
316 SS Flange	36	21¾ (552)	**FPR721N10**	4	**FPR721N3**	2	**FPR721N11**	3	**FPR721N5**	1	78 (36)
12-316 SS	48	27¼ (692)			**FPR727E3**	4	**FPR727E11**	3	**FPR727E5**	2	81 (37)
(9.3 W/cm²)	60	32¾ (832)			**FPR732N3**	4	**FPR732N11**	3	**FPR732N5**	2	85 (39)
Passivated	72	38¼ (972)			**FPR738E3**	4			**FPR738E5**	2	92 (42)
	100	51¼ (1302)							**FPR751E5**	4	100 (46)
	120	60¾ (1543)							**FPR760N5**	4	110 (50)

CONTINUED

All flange immersion heaters are Assembly Stock unless otherwise noted.

Availability

Stock: Same day shipment

Assembly Stock: Five to seven working days

Standard: 10 working days, depending on size

② Standard

③ Must be operated 3-phase wye

Tubular and Process Assemblies

Flange Immersion Heaters

6" 150 Lbs ANSI Flange—WATROD Element

WATROD Description	kW	Immersed B Dimension inch (mm)	Code No. 240V~(ac) 1-Phase	No. of Circuits	240V~(ac) 3-Phase	No. of Circuits	480V~(ac) 1-Phase	No. of Circuits	480V~(ac) 3-Phase	No. of Circuits	Est. Ship. Weight lbs (kg)
Application: Deionized Water, Demineralized Water											
60 W/in²	30	15¾ (400)	**FPR715N10X**	3	**FPR715N3X**	5	**FPR715N11X**	3	**FPR715N5X**	1	76 (35)
316 SS Flange	45	21¾ (552)	**FPR721N10X**	5	**FPR721N3X**	5	**FPR721N11X**	3	**FPR721N5X**	5	82 (38)
15-316 SS	60	27¼ (692)			**FPR727E3X**	5	**FPR727E11X**	3	**FPR727E5X**	5	85 (39)
(9.3 W/cm²)	75	32¾ (832)			**FPR732N3X**	5	**FPR732N11X**	5	**FPR732N5X**	5	90 (41)
Passivated	90	38¼ (972)			**FPR738E3X**	5			**FPR738E5X**	5	98 (45)
	125	51¼ (1302)							**FPR751E5X**	5	108 (49)
	150	60¾ (1543)							**FPR760N5X**	5	120 (55)
Application: Process Water											
48 W/in²⑤	18	13⅜ (340)	**FPN713G10**	2	**FPN713G3**	1	**FPN713G11**	1	**FPN713G5**	1	73 (33)
Steel Flange	24	17⅞ (454)	**FPN717R10**	3	**FPN717R3**	2	**FPN717R11**	2	**FPN717R5**	1	75 (34)
12-Incoloy®	30	20⅜ (518)	**FPN720G10**	3	**FPN720G3**	2	**FPN720G11**	2	**FPN720G5**	1	78 (36)
(7.5 W/cm²)	36	25⅜ (645)	**FPN725G10**	4	**FPN725G3**	2	**FPN725G11**	2	**FPN725G5**	1	81 (37)
	48	32⅞ (835)			**FPN732R3**	4	**FPN732R11**	3	**FPN732R5**	2	85 (39)
	60	40⅜ (1026)			**FPN740G3**	4	**FPN740G11**	3	**FPN740G5**	2	92 (42)
	72	47⅞ (1216)			**FPN747R3**	4			**FPN747R5**	2	100 (46)
48 W/in²	23	13⅜ (340)	**FPN713G10X**	3	**FPN713G3X**	5	**FPN713G11X**	1	**FPN713G5X**	1	76 (35)
Steel Flange	30	17⅞ (454)	**FPN717R10X**	3	**FPN717R3X**	5	**FPN717R11X**	3	**FPN717R5X**	1	78 (36)
15-Incoloy®	38	20⅜ (518)	**FPN720G10X**	5	**FPN720G3X**	5	**FPN720G11X**	3	**FPN720G5X**	1	82 (38)
(7.5 W/cm²)	45	25⅜ (645)	**FPN725G10X**	5	**FPN725G3X**	5	**FPN725G11X**	3	**FPN725G5X**	5	85 (39)
	60	32⅞ (835)			**FPN732R3X**	5	**FPN732R11X**	3	**FPN732R5X**	5	90 (41)
	75	40⅜ (1026)			**FPN740G3X**	5	**FPN740G11X**	5	**FPN740G5X**	5	98 (45)
	90	47⅞ (1216)			**FPN747R3X**	5			**FPN747R5X**	5	108 (49)
Applications: Forced Air and Gases, Caustic Solutions, Degreasing Solutions											
23 W/in²⑤⑥	12	17⅞ (454)	**FPNA17R10**	2	**FPNA17R3**	1	**FPNA17R11**	1	**FPNA17R5**	1	75 (34)
Steel Flange	18	25⅜ (645)	**FPNA25G10**	2	**FPNA25G3**	1	**FPNA25G11**	1	**FPNA25G5**	1	81 (37)
12-Incoloy®	24	32⅞ (835)	**FPNA32R10**	3	**FPNA32R3**	2	**FPNA32R11**	2	**FPNA32R5**	1	85 (39)
(3.6 W/cm²)	30	40⅜ (1026)	**FPNA40G10**	3	**FPNA40G3**	2	**FPNA40G11**	1	**FPNA40G5**	1	92 (42)
	36	47⅞ (1216)	**FPNA47R10**	4	**FPNA47R3**	2	**FPNA47R11**	2	**FPNA47R5**	1	100 (46)
	50	64⅜ (1635)			**FPNA64G3**	4	**FPNA64G11**	3	**FPNA64G5**	2	110 (50)
	60	76⅞ (1953)			**FPNA76R3**	4	**FPNA76R11**	3	**FPNA76R5**	2	118 (54)
23 W/in²	15	17⅞ (454)	**FPNA17R10X**	3	**FPNA17R3X**	1	**FPNA17R11X**	1	**FPNA17R5X**	1	78 (36)
Steel Flange	23	25⅜ (645)	**FPNA25G10X**	3	**FPNA25G3X**	5	**FPNA25G11X**	1	**FPNA25G5X**	1	85 (39)
15-Incoloy®	30	32⅞ (835)	**FPNA32R10X**	3	**FPNA32R3X**	5	**FPNA32R11X**	3	**FPNA32R5X**	1	90 (41)
(3.6 W/cm²)	38	40⅜ (1026)	**FPNA40G10X**	5	**FPNA40G3X**	5	**FPNA40G11X**	3	**FPNA40G5X**	1	98 (45)
	45	47⅞ (1216)	**FPNA47R10X**	5	**FPNA47R3X**	5	**FPNA47R11X**	3	**FPNA47R5X**	5	108 (49)
	63	64⅜ (1635)			**FPNA64G3X**	5	**FPNA64G11X**	3	**FPNA64G5X**	5	120 (55)
	75	76⅞ (1953)			**FPNA76R3X**	5	**FPNA76R11X**	5	**FPNA76R5X**	5	131 (60)

CONTINUED

All flange immersion heaters are Assembly Stock unless otherwise noted.

Availability

Stock: Same day shipment

Assembly Stock: Five to seven working days

Standard: 10 working days, depending on size

⑤ 240V~(ac) 3-phase can be rewired wye to produce ⅓ more kW and watt density when operated at 480V~(ac) 3-phase.

⑥ Can be rewired wye to produce ⅓ of the original kW and watt density (3-phase only).

Tubular and Process Assemblies

Flange Immersion Heaters

6" 150 lb ANSI Flange—WATROD Element

WATROD Description	kW	Immersed B Dimension inch (mm)	Code No. 240V~(ac) 1-Phase	No. of Circuits	240V~(ac) 3-Phase	No. of Circuits	480V~(ac) 1-Phase	No. of Circuits	480V~(ac) 3-Phase	No. of Circuits	Est. Ship. Weight lbs (kg)
Applications: Lightweight Oils, Degreasing Solutions, Heat Transfer Oils											
23 W/in²	12	17⅞ (454)	**FPS717R10**	2	**FPS717R3**	1	**FPS717R11**	1	**FPS717R5**	1	75 (34)
Steel Flange	18	25⅜ (645)	**FPS725G10**	2	**FPS725G3**	1	**FPS725G11**	1	**FPS725G5**	1	81 (37)
12-Steel	24	32⅞ (835)	**FPS732R10**	3	**FPS732R3**	2	**FPS732R11**	2	**FPS732R5**	1	85 (39)
(3.6 W/cm²)	30	40⅜ (1026)	**FPS740G10**	3	**FPS740G3**	2	**FPS740G11**	2	**FPS740G5**	1	92 (42)
	36	47⅞ (1216)	**FPS747R10**	4	**FPS747R3**	2	**FPS747R11**	2	**FPS747R5**	1	100 (46)
	50	64⅜ (1635)			**FPS764G3**	4	**FPS764G11**	3	**FPS764G5**	2	110 (50)
	60	76⅞ (1953)			**FPS776R3**	4	**FPS776R11**	3	**FPS776R5**	2	118 (54)
23 W/in²	15	17⅞ (454)	**FPS717R10X**	3	**FPS717R3X**	1	**FPS717R11X**	1	**FPS717R5X**	1	78 (36)
Steel Flange	23	25⅜ (645)	**FPS725G10X**	3	**FPS725G3X**	5	**FPS725G11X**	1	**FPS725G5X**	1	85 (39)
15-Steel	30	32⅞ (835)	**FPS732R10X**	3	**FPS732R3X**	5	**FPS732R11X**	3	**FPS732R5X**	1	90 (41)
(3.6 W/cm²)	38	40⅜ (1026)	**FPS740G10X**	5	**FPS740G3X**	5	**FPS740G11X**	3	**FPS740G5X**	1	98 (45)
	45	47⅞ (1216)	**FPS747R10X**	5	**FPS747R3X**	5	**FPS747R11X**	3	**FPS747R5X**	5	108 (49)
	63	64⅜ (1635)			**FPS764G3X**	5	**FPS764G11X**	3	**FPS764G5X**	5	120 (55)
	75	76⅞ (1953)			**FPS776R3X**	5	**FPS776R11X**	5	**FPS776R5X**	5	131 (60)
Applications: Medium Weight Oils, Heat Transfer Oils, Liquid Paraffin											
16 W/in²③	6	13⅜ (340)			**FPN713G12**	1			**FPN713G13**	1	73 (33)
Steel Flange	8	17⅞ (454)			**FPN717R12**	1			**FPN717R13**	1	75 (34)
12-Incoloy®	10	20⅜ (518)			**FPN720G12**	1			**FPN720G13**	1	78 (36)
(2.5 W/cm²)	12	25⅜ (645)			**FPN725G12**	1			**FPN725G13**	1	81 (37)
	16	32⅞ (835)			**FPN732R12**	1			**FPN732R13**	1	85 (39)
	20	40⅜ (1026)			**FPN740G12**	2			**FPN740G13**	1	92 (42)
	24	47⅞ (1216)			**FPN747R12**	2			**FPN747R13**	1	100 (46)
16 W/in²③	7.5	13⅜ (340)			**FPN713G12X**	1			**FPN713G13X**	1	76 (35)
Steel Flange	10	17⅞ (454)			**FPN717R12X**	1			**FPN717R13X**	1	78 (36)
15-Incoloy®	12.5	20⅜ (518)			**FPN720G12X**	1			**FPN720G13X**	1	82 (38)
(2.5 W/cm²)	15	25⅜ (645)			**FPN725G12X**	1			**FPN725G13X**	1	85 (39)
	20	32⅞ (835)			**FPN732R12X**	5			**FPN732R13X**	1	90 (41)
	25	40⅜ (1026)			**FPN740G12X**	5			**FPN740G13X**	1	98 (45)
	30	47⅞ (1216)			**FPN747R12X**	5			**FPN747R13X**	1	108 (49)
Applications: Bunker C and #6 Fuel Oils											
8 W/in²③	8	32⅞ (835)			**FPS732R12**	1			**FPS732R13**	1	85 (39)
Steel Flange	10	40⅜ (1026)			**FPS740G12**	1			**FPS740G13**	1	92 (42)
12-Steel	12	47⅞ (1216)			**FPS747R12**	1			**FPS747R13**	1	100 (46)
(1.3 W/cm²)	16.5	64⅜ (1635)			**FPS764G12**	1			**FPS764G13**	1	110 (50)
	20	76⅞ (1953)			**FPS776R12**	2			**FPS776R13**	1	118 (54)
8 W/in²③	10	32⅞ (835)			**FPS732R12X**	1			**FPS732R13X**	1	90 (41)
Steel Flange	12.5	40⅜ (1026)			**FPS740G12X**	1			**FPS740G13X**	1	98 (45)
15-Steel	15	47⅞ (1216)			**FPS747R12X**	1			**FPS747R13X**	1	108 (49)
(1.3 W/cm²)	21	64⅜ (1635)			**FPS764G12X**	5			**FPS764G13X**	1	120 (55)
	25	76⅞ (1953)			**FPS776R12X**	5			**FPS776R13X**	1	131 (60)

All flange immersion heaters are Assembly Stock unless otherwise noted.

Availability

Stock: Same day shipment

Assembly Stock: Five to seven working days

Standard: 10 working days, depending on size

③ Must be operated 3-phase wye

Tubular and Process Assemblies

Flange Immersion Heaters

6" 150 lb ANSI Flange—FIREBAR Element

FIREBAR Description	kW	Immersed B Dimension inch	(mm)	Code No. 240V~(ac) 3-Phase	No. of Circuits	480V~(ac) 3-Phase	No. of Circuits	Est. Ship. Weight lbs	(kg)
Applications: Process Water, Ethylene Glycol (50%)									
45 W/in²	30	13⅜	(340)	**FPNF13G27**				78	(36)
304 SS Flange	37.5	16	(406)	**FPNF16A27**	5			81	(37)
15-Incoloy®	45	18⅜	(467)	**FPNF18G27**	5			84	(38)
(7 W/cm²)	60	22⅞	(581)	**FPNF22R27**	5	**FPNF22R28**	5	87	(40)
	75	27⅞	(708)	**FPNF27R27**	5	**FPNF27R28**	5	91	(42)
	90	32⅞	(835)	**FPNF32R27**	5	**FPNF32R28**	5	95	(43)
	120	42⅜	(1076)			**FPNF42G28**	5	106	(48)
	150	51⅞	(1318)			**FPNF51R28**	5	116	(53)
Applications: Cooking Oils, Ethylene Glycol (100%)									
30 W/in²③	25	16½	(419)	**FPNF16J12**	5	**FPNF16J13**	5	81	(37)
304 SS Flange	32	19½	(495)	**FPNF19J12**	5	**FPNF19J13**	5	84	(38)
15-Incoloy®	42	24½	(622)	**FPNF24J12**	5	**FPNF24J13**	5	87	(40)
(4.7 W/cm²)	52	30	(762)	**FPNF30A12**	5	**FPNF30A13**	5	91	(42)
	64	35	(889)	**FPNF35A12**	5	**FPNF35A13**	5	95	(43)
	85	45½	(1156)	**FPNF45J12**	5	**FPNF45J13**	5	106	(48)
	110	56	(1422)		5	**FPNF56A13**	5	116	(53)
Applications: Heat Transfer Oils, Mineral Oils, Degreasing Solutions									
23 W/in²④	19	16½	(419)	**FPNF16J20**	5			81	(37)
304 SS Flange	24	19½	(495)	**FPNF19J20**	5			84	(38)
15-Incoloy®	32	24½	(622)	**FPNF24J20**	5	**FPNF24J19**	5	87	(40)
(3.6 W/cm²)	40	30	(762)	**FPNF30A20**	5	**FPNF30A19**	5	91	(42)
	48	35	(889)	**FPNF35A20**	5	**FPNF35A19**	5	95	(43)
	64	45½	(1156)	**FPNF45J20**	5	**FPNF45J19**	5	106	(48)
	80	56	(1422)	**FPNF56A20**	5	**FPNF56A19**	5	116	(53)
Applications: Medium Weight Oils, Heat Transfer Oils, Liquid Paraffin									
15 W/in²③	10	13⅜	(340)	**FPNF13G29**	5			78	(36)
304 SS Flange	12.5	16	(406)	**FPNF16A29**	5			81	(37)
15-Incoloy®	15	18⅜	(467)	**FPNF18G29**	5			84	(38)
(2.3 W/cm²)	20	22⅞	(581)	**FPNF22R29**	5	**FPNF22R30**	5	87	(40)
	25	27⅞	(708)	**FPNF27R29**	5	**FPNF27R30**	5	91	(42)
	30	32⅞	(835)	**FPNF32R29**	5	**FPNF32R30**	5	95	(43)
	40	42⅜	(1076)	**FPNF42G29**	5	**FPNF42G30**	5	106	(48)
	50	51⅞	(1318)	**FPNF51R29**	5	**FPNF51R30**	5	116	(53)
Applications: Bunker C and #6 Fuel Oils, Asphalt									
8 W/in²③	6.3	16½	(419)	**FPNF16J22**	5			81	(37)
304 SS Flange	8.1	19½	(495)	**FPNF19J22**	5			84	(38)
15-Incoloy®	10.6	24½	(622)	**FPNF24J22**	5	**FPNF24J21**	5	87	(40)
(1.3 W/cm²)	13.1	30	(762)	**FPNF30A22**	5	**FPNF30A21**	5	91	(42)
	16	35	(889)	**FPNF35A22**	5	**FPNF35A21**	5	95	(43)
	21.3	45½	(1156)	**FPNF45J22**	5	**FPNF45J21**	5	106	(48)
	26	56	(1422)	**FPNF56A22**	5	**FPNF56A21**	5	116	(53)

All flange immersion heaters are Assembly Stock unless otherwise noted.

Availability

Stock: Same day shipment

Assembly Stock: Five to seven working days

Standard: 10 working days, depending on size

③ Must be operated 3-phase wye.
④ Can be rewired for 1-phase.

Tubular and Process Assemblies

Flange Immersion Heaters

8" 150 lb ANSI Flange—WATROD Element

WATROD Description	kW	Immersed B Dimension inch (mm)	Code No. 240V~(ac) 1-Phase	No. of Circuits	240V~(ac) 3-Phase	No. of Circuits	480V~(ac) 1-Phase	No. of Circuits	480V~(ac) 3-Phase	No. of Circuits	Est. Ship. Weight lbs (kg)
Application: Clean Water											
60 W/in²	50	21¾ (553)			**FRC721N3②**	3	**FRC721N11**	3	**FRC721N5**	2	118 (54)
Steel Flange	75	29¾ (756)			**FRC729N3②**	6			**FRC729N5②**	2	126 (58)
18-Copper	100	37¼ (946)			**FRC737E3②**	6			**FRC737E5**	3	130 (59)
(9.3 W/cm²)	125	45¼ (1149)			**FRC745E3②**	6			**FRC745E5②**	6	132 (60)
	150	52¾ (1340)							**FRC752N5②**	6	137 (63)
	175	60¾ (1543)							**FRC760N5②**	6	144 (66)
	200	68¼ (1734)							**FRC768E5②**	6	149 (68)
Application: Process Water											
48 W/in²⑤	50	25¾ (654)			**FRN725N3②**	3	**FRN725N11②**	3	**FRN725N5②**	2	121 (55)
Steel Flange	75	35¾ (908)			**FRN735N3②**	6			**FRN735N5②**	2	130 (59)
18-Incoloy®	100	44¼ (1124)			**FRN744E3**	6			**FRN744E5**	3	132 (60)
(7.5 W/cm²)	125	54 11/16 (1389)			**FRN754M3②**	6			**FRN754M5②**	6	140 (64)
	150	63 11/16 (1617)							**FRN763M5②**	6	145 (66)
	175	73 3/16 (1859)							**FRN773D5**	6	151 (69)
	200	82 11/16 (2100)							**FRN782M5②**	6	157 (72)
48 W/in²	67	26 3/16 (665)			**FRN726D3X②**	4	**FRN726D11X②**	3	**FRN726D5X②**	2	129 (59)
Steel Flange	100	36 3/16 (919)			**FRN736D3X②**	8			**FRN736D5X②**	4	142 (65)
24-Incoloy®	133	44 11/16 (1135)			**FRN744M3X②**	8			**FRN744M5X②**	4	147 (67)
(7.5 W/cm²)	167	54 11/16 (1389)			**FRN754M3X②**	8			**FRN754M5X②**	8	158 (72)
	200	63 11/16 (1618)							**FRN763M5X②**	8	166 (76)
	233	73 3/16 (1859)							**FRN773D5X**	8	175 (80)
	267	82 11/16 (2100)							**FRN782M5X②**	8	184 (84)
Application: Forced Air and Gases, Caustic Solutions, Degreasing Solutions											
23 W/in²⑤⑥	30	32¾ (832)	**FRNA32N10②**	3	**FRNA32N3②**	2	**FRNA32N11②**	2	**FRNA32N5②**	1	130 (59)
Steel Flange	40	43¼ (1099)			**FRNA43E3②**	3	**FRNA43E11②**	2	**FRNA43E5②**	2	132 (60)
18-Incoloy®	50	51 11/16 (1313)			**FRNA51M3**	3	**FRNA51M11**	3	**FRNA51M5**	2	137 (63)
(3.6 W/cm²)											
23 W/in²	40	33 3/16 (843)	**FRNA33D10X②**	4	**FRNA33D3X②**	4	**FRNA33D11X②**	2	**FRNA33D5X②**	2	142 (65)
Steel Flange	53	43 11/16 (1110)			**FRNA43M3X②**	4	**FRNA43M11X②**	3	**FRNA43M5X②**	2	147 (67)
24-Incoloy®	67	51 11/16 (1313)			**FRNA51M3X②**	4	**FRNA51M11X②**	3	**FRNA51M5X②**	2	154 (70)
(3.6 W/cm²)											

CONTINUED

All flange immersion heaters are Assembly Stock unless otherwise noted.

Availability

Stock: Same day shipment

Assembly Stock: Five to seven working days

Standard: 10 working days, depending on size

Truck Shipment only

② Standard

⑤ 240V~(ac) 3-phase can be rewired wye to produce ⅓ more kW and watt density when operated at 480V~(ac) 3-phase.

⑥ Can be rewired wye to produce ⅓ of the original kW and watt density (3-phase only).

Tubular and Process Assemblies

Flange Immersion Heaters

8" 150 lb ANSI Flange—WATROD Element

WATROD Description	kW	Immersed B Dimension inch (mm)	Code No. 240V~(ac) 1-Phase	No. of Circuits	240V~(ac) 3-Phase	No. of Circuits	480V~(ac) 1-Phase	No. of Circuits	480V~(ac) 3-Phase	No. of Circuits	Est. Ship. Weight lbs (kg)
Applications: Lightweight Oils, Degreasing Solutions, Heat Transfer Oils											
23 W/in²	30	32¾ (832)	**FRS732N10②**	3	**FRS732N3②**	2	**FRS732N11②**	2	**FRS732N5②**	1	130 (59)
Steel Flange	40	43¾ (1099)			**FRS743E3②**	3	**FRS743E11②**	2	**FRS743E5**	2	132 (60)
18-Steel	50	51 11/16 (1313)			**FRS751M3**	3	**FRS751M11**	3	**FRS751M5**	2	137 (63)
(3.6 W/cm²)	60	62 3/16 (1580)			**FRS762D3②**	6	**FRS762D11②**	3	**FRS762D5②**	2	154 (70)
	70	70 11/16 (1795)			**FRS770M3②**	6	**FRS770M11**	6	**FRS770M5**	2	160 (73)
	80	79 11/16 (2024)			**FRS779M3②**	6			**FRS779M5②**	3	172 (78)
23 W/in²	40	33 3/16 (843)	**FRS733D10X②**	4	**FRS733D3X②**	4	**FRS733D11X②**	2	**FRS733D5X②**	2	142 (65)
Steel Flange	53	43 11/16 (1110)			**FRS743M3X②**	4	**FRS743M11X②**	3	**FRS743M5X②**	2	147 (67)
24-Steel	67	51 11/16 (1313)			**FRS751M3X②**	4	**FRS751M11X②**	3	**FRS751M5X②**	2	154 (70)
(3.6 W/cm²)	80	62 3/16 (1580)			**FRS762D3X②**	8	**FRS762D11X②**	4	**FRS762D5X②**	4	166 (76)
	93	70 11/16 (1796)			**FRS770M3X②**	8	**FRS770M11X②**	6	**FRS770M5X②**	4	175 (80)
	107	79 11/16 (2024)			**FRS779M3X②**	8			**FRS779M5X②**	4	181 (82)
Applications: Medium Weight Oils, Heat Transfer Oils, Liquid Paraffin											
16 W/in²③	17	25¾ (654)			**FRN725N12②**	1			**FRN725N13②**	1	121 (55)
Steel Flange	25	35¾ (908)			**FRN735N12②**	2			**FRN735N13②**	1	130 (59)
18-Incoloy®	33	44¼ (1124)			**FRN744E12②**	2			**FRN744E13**	1	132 (60)
(2.5 W/cm²)	42	54 11/16 (1389)			**FRN754M12②**	3			**FRN754M13②**	2	140 (64)
	50	63 11/16 (1618)							**FRN763M13②**	2	145 (66)
	58	73 3/16 (1859)							**FRN773D13**	2	151 (69)
	67	82 11/16 (2100)							**FRN782M13②**	2	157 (72)
16 W/in²③	23	26 3/16 (665)			**FRN726D12X②**	2			**FRN726D13X②**	1	129 (59)
Steel Flange	33	36 3/16 (919)			**FRN736D12X②**	2			**FRN736D13X②**	1	142 (65)
24-Incoloy®	44	44 11/16 (1135)			**FRN744M12X②**	4			**FRN744M13X②**	2	147 (67)
(2.5 W/cm²)	56	54 11/16 (1389)			**FRN754M12X②**	4			**FRN754M13X②**	2	158 (72)
	67	63 11/16 (1618)							**FRN763M13X②**	2	166 (76)
	77	73 3/16 (1859)							**FRN773D13X②**	2	175 (80)
	89	82 11/16 (2100)							**FRN782M13X②**	4	184 (84)
Applications: Bunker C and #6 Fuel Oils											
8 W/in²③	12.5	43¼ (1099)			**FRS743E12②**	1			**FRS743E13②**	1	132 (60)
Steel Flange	16.5	51 11/16 (1313)			**FRS751M12**	1			**FRS751M13**	1	137 (62)
18-Steel	20	62 3/16 (1580)			**FRS762D12②**	2			**FRS762D13②**	1	145 (66)
(1.3 W/cm²)	24	70 11/16 (1795)			**FRS770M12**	2			**FRS770M13**	1	151 (69)
	27	79 11/16 (2024)			**FRS779M12②**	2			**FRS779M13②**	1	155 (71)
8 W/in²③	17	43 11/16 (1110)			**FRS743M12X②**	1			**FRS743M13X②**	1	147 (67)
Steel Flange	22	51 11/16 (1313)			**FRS751M12X②**	2			**FRS751M13X②**	1	154 (70)
24-Steel	27	62 3/16 (1580)			**FRS762D12X②**	2			**FRS762D13X②**	1	166 (76)
(1.3 W/cm²)	32	70 11/16 (1796)			**FRS770M12X②**	2			**FRS770M13X②**	1	175 (80)
	36	79 11/16 (2024)			**FRS779M12X②**	2			**FRS779M13X②**	1	181 (82)

All flange immersion heaters are Assembly Stock unless otherwise noted.

Availability

Stock: Same day shipment

Assembly Stock: Five to seven working days

Standard: 10 working days, depending on size

Truck Shipment only

② Standard

③ Must be operated 3-phase wye

Tubular and Process Assemblies

Flange Immersion Heaters

10" 150 lb ANSI Flange—WATROD Element

WATROD Description	kW	Immersed B Dimension inch (mm)	Code No. 240V~(ac) 3-Phase	No. of Circuits	Code No. 480V~(ac) 3-Phase	No. of Circuits	Est. Ship. Weight lbs (kg)
Application: Process Water							
48 W/in²⑤	190	54¾ (1391)			**FSN754N5②**	9	240 (109)
Steel Flange	262	73¼ (1861)			**FSN773E5**	9	260 (118)
27-Incoloy®							
(7.5 W/cm²)							
Applications: Forced Air and Gases, Caustic Solutions, Degreasing Solutions							
23 W/in²⑤⑥	45	33¼ (845)	**FSNA33E3②**	3	**FSNA33E5②**	3	165 (75)
Steel Flange	60	43¾ (1111)	**FSNA43N3②**	3	**FSNA43N5②**	3	195 (89)
27-Incoloy®	75	51¾ (1314)	**FSNA51N3**	9	**FSNA51N5**	3	230 (105)
(3.6 W/cm²)							
Applications: Lightweight Oils, Degreasing Solutions, Heat Transfer Oils							
23 W/in²	45	33¼ (845)	**FSS733E3②**	3	**FSS733E5②**	3	165 (75)
Steel Flange	60	43¾ (1111)	**FSS743N3②**	3	**FSS743N5②**	3	195 (89)
27-Steel	75	51¾ (1314)	**FSS751N3**	9	**FSS751N5**	3	230 (105)
(3.6 W/cm²)	90	62¼ (1581)			**FSS762E5②**	3	250 (114)
	105	70¾ (1797)			**FSS770N5**	3	258 (117)
	120	78¾ (2000)			**FSS778N5②**	3	265 (121)
Applications: Medium Weight Oils, Heat Transfer Oils, Liquid Paraffin							
16 W/in²③	63	54¾ (1391)			**FSN754N13②**	3	240 (109)
Steel Flange	75	63¾ (1619)			**FSN763N13②**	3	250 (114)
27-Incoloy®	87	73¼ (1861)			**FSN773E13**	3	258 (117)
(2.5 W/cm²)							
Applications: Bunker C and #6 Fuel Oils							
8 W/in²③	25	51¾ (1314)	**FSS751N12**	3	**FSS751N13**	1	230 (105)
Steel Flange	30	62¼ (1581)	**FSS762E12②**	3	**FSS762E13②**	1	250 (114)
27-Steel	35	70¾ (1797)	**FSS770N12**	3	**FSS770N13**	1	258 (117)
(1.3 W/cm²)	40	78¾ (2000)	**FSS778N12②**	3	**FSS778N13②**	1	265 (121)

All flange immersion heaters are Assembly Stock unless otherwise noted.

Availability

Stock: Same day shipment

Assembly Stock: Five to seven working days

Standard: 10 working days, depending on size

Truck Shipment only

② Standard

③ Must be operated 3-phase wye.

⑤ 240V~(ac) 3-phase can be rewired wye to produce ⅓ more kW and watt density when operated at 480V~(ac) 3-phase.

⑥ Can be rewired wye to produce ⅓ of the original kW and watt density (3-phase only).

Tubular and Process Assemblies

Flange Immersion Heaters

12" 150 lb ANSI Flange—WATROD Element

WATROD Description	kW	Immersed B Dimension inch (mm)	Code No. 240V~(ac) 3-Phase	No. of Circuits	Code No. 480V~(ac) 3-Phase	No. of Circuits	Est. Ship. Weight lbs (kg)
Application: Process Water							
48 W/in²	250	54⅝ (1387)			**FTN754L5②**	6	280 (127)
Steel Flange	350	73⅛ (1857)			**FTN773C5**	12	291 (132)
36-Incoloy®							
(7.5 W/cm²)							
Applications: Forced Air and Gases, Caustic Solutions, Degreasing Solutions							
23 W/in²	60	33⅛ (841)			**FTNA33C5②**	3	205 (93)
Steel Flange	80	43⅝ (1108)			**FTNA43L5②**	3	240 (109)
36-Incoloy®	100	51⅝ (1311)			**FTNA51L5**	3	280 (127)
(3.6 W/cm²)							
Applications: Lightweight Oils, Degreasing Solutions, Heat Transfer Oils							
23 W/in²	60	33⅛ (841)			**FTS733C5②**	3	205 (93)
Steel Flange	80	43⅝ (1108)			**FTS743L5②**	3	240 (109)
36-Steel	100	51⅝ (1311)			**FTS751L5**	3	280 (127)
(3.6 W/cm²)	120	62⅛ (1578)			**FTS762C5②**	3	285 (130)
	140	70⅝ (1794)			**FTS770L5**	4	290 (132)
	160	78⅝ (1997)			**FTS778L5②**	4	300 (136)
Applications: Medium Weight Oils, Heat Transfer Oils, Liquid Paraffin							
16 W/in²③	83	54⅝ (1387)			**FTN754L13②**	3	280 (127)
Steel Flange	117	73⅛ (1857)			**FTN773C13②**	3	291 (132)
36-Incoloy®							
(2.5 W/cm²)							
Applications: Bunker C and #6 Fuel Oils							
8 W/in²③	34	51⅝ (1311)	**FTS751L12②**	2	**FTS751L13**	1	280 (127)
Steel Flange	40	62⅛ (1578)	**FTS762C12②**	2	**FTS762C13②**	1	285 (130)
36-Steel	47	70⅝ (1794)	**FTS770L12②**	3	**FTS770L13**	2	290 (132)
(1.3 W/cm²)	54	78⅝ (1997)	**FTS778L12②**	3	**FTS778L13②**	2	300 (136)

All flange immersion heaters are Assembly Stock unless otherwise noted.

Availability

Stock: Same day shipment

Assembly Stock: Five to seven working days

Standard: 10 working days, depending on size

Truck Shipment only

② Standard

③ Must be operated 3-phase wye.

Tubular and Process Assemblies

Flange Immersion Heaters

14" 150 lb ANSI Flange—WATROD Element

WATROD Description	kW	Immersed B Dimension inch (mm)	Code No. 240V~(ac) 3-Phase	No. of Circuits	Code No. 480V~(ac) 3-Phase	No. of Circuits	Est. Ship. Weight lbs (kg)
Application: Process Water							
48 W/in²	315	54½ (1384)			**FWN754J5②**	15	300 (136)
Steel Flange	375	63½ (1613)			**FWN763J5②**	15	310 (141)
45-Incoloy®							
(7.5 W/cm²)							
Applications: Forced Air and Gases, Caustic Solutions, Degreasing Solutions							
23 W/in²	75	33 (838)			**FWNA33A5②**	3	225 (102)
Steel Flange	100	43½ (1105)			**FWNA43J5②**	3	255 (116)
45-Incoloy®	125	51½ (1308)			**FWNA51J5**	5	300 (136)
(3.6 W/cm²)							
Applications: Lightweight Oils, Degreasing Solutions, Heat Transfer Oils							
23 W/in²	75	33 (838)			**FWS733A5②**	3	225 (102)
Steel Flange	100	43½ (1105)			**FWS743J5②**	3	255 (116)
45-Steel	125	51½ (1308)			**FWS751J5**	5	300 (136)
(3.6 W/cm²)	150	62 (1575)			**FWS762A5②**	5	310 (141)
	175	70½ (1791)			**FWS770J5**	5	318 (145)
	200	78½ (1994)			**FWS778J5②**	5	330 (150)
Applications: Medium Weight Oils, Heat Transfer Oils, Liquid Paraffin							
16 W/in²③	105	54½ (1384)			**FWN754J13②**	3	300 (136)
Steel Flange	125	63½ (1613)			**FWN763J13②**	5	310 (141)
45-Incoloy®							
(2.5 W/cm²)							
Applications: Bunker C and #6 Fuel Oils							
8 W/in²③	42	51½ (1308)	**FWS751J12**	3	**FWS751J13**	3	300 (136)
Steel Flange	50	62 (1575)	**FWS762A12②**	3	**FWS762A13②**	3	310 (141)
45-Steel	60	70½ (1791)	**FWS770J12**	3	**FWS770J13**	3	318 (144)
(1.3 W/cm²)	67	78½ (1994)	**FWS778J12②**	5	**FWS778J13②**	3	330 (150)

All flange immersion heaters are Assembly Stock unless otherwise noted.

Availability

Stock: Same day shipment

Assembly Stock: Five to seven working days

Standard: 10 working days, depending on size

Truck Shipment only

② Standard

③ Must be operated 3-phase wye.

F.O.B.: Hannibal, Missouri

Flange Immersion Heaters

Build-a-Code

_____ - ____ - _____ - ___

Flange Immersion Heater Base Code Number①

(Includes general purpose enclosure without thermostat)

Terminal Enclosure Type

S = General purpose (NEMA 1)
W = Moisture resistant (NEMA 4)
E = Explosion resistant (NEMA 7)
E/W = Explosion/moisture resistant (NEMA 7/4)

Thermostat②

Thermocouple③

J = Type J

K = Type K

① Flange immersion heaters are supplied with a standard, general purpose (NEMA 1) terminal enclosure. A thermostat will not fit the standard general purpose terminal enclosure on 2, 2½ and 3 inch flange sizes.
② Code numbers are shown on the Thermostat stock chart on page 425. Check the temperature sensing bulb O.D. to be certain it will fit into the thermowell's I.D.
③ Specify Type J or K thermocouple. If overtemp thermocouple specify orientation horizontal, vertical up or vertical down.

How to Order

To order a stock flange heater, please specify:

- Watlow code number
- Flange size and material
- Volts/watts
- Phase
- Options
- Quantity

If the flange immersion heater is to be configured with options, add the suffix letter(s) to the base flange heater code number, as indicated on the Build-a-Code chart.

If our stock units do not meet your application needs, Watlow will make-to-order.

For **made-to-order** units please specify:

- Application, including media heated, flow rate, pressure, and process operating temperatures
- Volts/watts
- Watt density
- Phase
- Number of circuits
- Number of heating elements
- Element diameter (WATROD only)
- Immersed ('B' dimension) length
- Flange size, rating and material
- No-heat section below the flange
- Terminal enclosure type
- Options
- Quantity

Availability

Stock: Same day shipment

Assembly Stock: Five to seven working days

Modified Stock③: Five to seven working days

Standard: 10 working days

Made-to-Order: Five to seven weeks

Options, complexity and quantity may affect availability and lead times. Consult factory.

③ Stock or Assembly Stock units with catalog options.

Tubular and Process Assemblies

Quick Ship

On stock chart units:
- *Same day on most heaters*
- *10 working days on special voltages and/or wattages*
- *15 working days on special element lengths*

Square Flange Immersion Heaters

Designed for use in boilers and industrial storage tanks, square flange immersion heaters offer an energy efficient solution to heating water, oils and degreasing solutions.

Consisting of WATROD or FIREBAR® elements brazed, staked, or welded to a four- or six-bolt flange, these heaters mount directly to a mating flange that is welded to a tank wall or nozzle.

Installation and maintenance is easy. Heater change-out is also simple … unbolt the flange and replace it with another ... without extensive equipment downtime.

Performance Capabilities

- Watt densities to 100 W/in^2 (15.5 W/cm^2)
- Wattages to 24kW
- Voltages to 480V~(ac)
- Incoloy® sheath temperatures to 1600°F (870°C)

Features and Benefits

- **2½, 3⅛ and 4½ inch square flanges** easily adapt to application needs.
- **Asbestos-free gaskets** come wire-tied to each flange. Spare gaskets also available.
- **Epoxy or silicone resin seals**, rated to 250°F (120°C) or 390°F (200°C) respectively, protect elements against moisture and other contaminants.
- **WATROD hairpins are repressed (recompacted)** to maintain MgO density, dielectric strength, heat transfer and life.
- **UL® and CSA component recognition** under file numbers E52951 and 31388 respectively. See **pages 268 to 271** for details.

Flange materials:

WATROD	Steel 304 stainless steel
FIREBAR	Steel Brass

Applications

- Water
- Boiler equipment
- Vapor degreasers
- Fuel oils
- Heat transfer fluids
- Caustic solutions

Available on request:

- **Sheath materials** in copper, steel, 304 and 316 stainless steel and titanium
- **Flange materials** in titanium and 316 stainless steel
- **Flange sizes** to meet specific application needs
- **External finishes** such as passivation, belt polishing and glass beading
- **Other voltage and wattage ratings**

  Consult your Watlow representative for details.

F.O.B.: Hannibal, Missouri

Square Flange Immersion Heaters

Application Hints

- Determine recommended sheath materials and watt densities by using the ***Element and Assembly Selection Guide*** on **pages 262 to 263**. If wattage is not known, consult your Watlow representative.
- Extend the element's no-heat section completely in the fluid at all times to prevent premature heater failure. See the accompanying illustration for proper placement of the no-heat section.
- Mount WATROD and FIREBAR square flange heaters horizontally and low in the tank, but above sludge level.
- Periodically remove heaters to inspect and clean the elements.

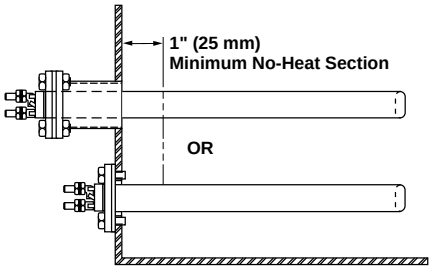

- Keep terminations clean, dry and tight.
- Minimize problems associated with low liquid level conditions by using a low liquid level sensor.

Heater Dimension	Inch	(mm)
A	1½	(38)
C	2½	(64)
D	2 ½	(64)
E	1	(25)
H	1½	(38)

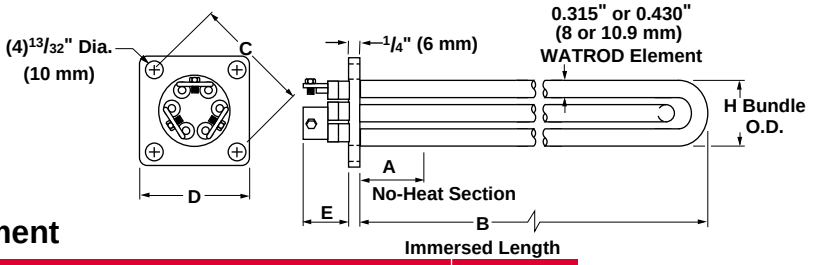

2½" Square Flange—WATROD Element

WATROD Description	kW	Immersed B Dimension inch	(mm)	Code No. 240V~(ac) 1-Phase	240V~(ac) 3-Phase	480V~(ac) 1-Phase	480V~(ac) 3-Phase	Est. Ship. Weight lbs	(kg)
Applications: Clean and Potable Water									
100 W/in² **Steel Flange** **3-Incoloy®** (15.5 W/cm²)	8.0	11¾	(298)	**FHN11N10②**	**FHN11N3②**	**FHN11N11②**	**FHN11N5**	18	(9)
Applications: Forced Air and Gases, Caustic Solutions, Degreasing Solutions									
30 W/in² **304 SS Flange** **3-Incoloy®** (4.7 W/cm²)	3.0 3.75	18½ 23 1/16	(470) (586)	**FHN18J10①** **FHN23B10①**	**FHN18J3** **FHN23B3①**	**FHN18J11②** **FHN23B11②**	**FHN18J5②** **FHN23B5②**	19 20	(9) (9)
25 W/in² **304 SS Flange** **3-Incoloy®** (3.9 W/cm²)	1.5	12	(305)	**FHN12A10①**	**FHN12A3**	**FHN12A11②**	**FHN12A5②**	18	(8)
Applications: Bunker C and #6 Fuel Oils									
10 W/in² **304 SS Flange** **3-Incoloy®** (1.6 W/cm²)	1.0 1.25	18½ 23 1/16	(470) (586)		**FHN18J12①** **FHN23B12①**		**FHN18J13②** **FHN23B13②**	19 20	(9) (9)
8 W/in² **304 SS Flange** **3-Incoloy®** (1.3 W/cm²)	0.5	12	(305)		**FHN12A12①**		**FHN12A13②**	18	(8)

All square flange heaters are Stock unless otherwise noted.

Availability
Stock: Same day shipment
Assembly Stock: Five to seven working days
Standard: Six weeks

① Assembly Stock
② Standard

Tubular and Process Assemblies

Square Flange Immersion Heaters

Heater Dimension	Inch	(mm)
A	1½	(38)
C	2½	(64)
D	2½	(64)
E	1¾	(44)
H	1 5/16	(33)

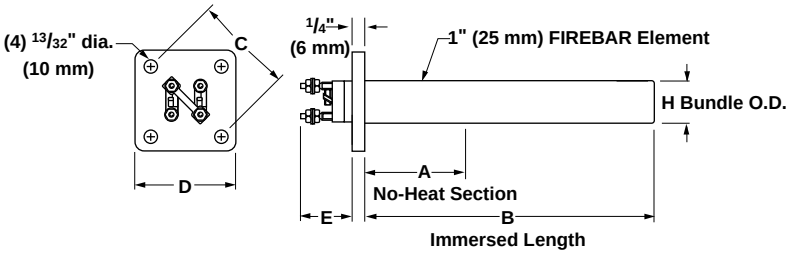

2½" Square Flange—FIREBAR Element

FIREBAR Description	kW	Immersed B Dimension Inch	(mm)	Code No. 208V~(ac) 3-Phase	240V~(ac) 1-Phase	240V~(ac) 3-Phase	480V~(ac) 1-Phase	480V~(ac) 3-Phase	Est. Ship. Weight lbs	(kg)
Applications: Clean and Potable Water										
100 W/in²	5	11½	(292)	**FHNFA11J26N②**	**FHNFA11J10N①**	**FHNFA11J3N①**	**FHNFA11J11N②**	**FHNFA11J5N②**	5	(3)
Steel Flange	8	20¾	(527)	**FHNFA20N26N②**	**FHNFA20N10N①**	**FHNFA20N3N①**	**FHNFA20N11N②**	**FHNFA20N5N①**	7	(4)
1-Incoloy®	10	24⅜	(619)	**FHNFA24G26N②**	**FHNFA24G10N①**	**FHNFA24G3N②**	**FHNFA24G11N②**	**FHNFA24G5N①**	8	(4)
(15.5 W/cm²)	15	33 15/16	(862)	**FHNFA33S26N②**		**FHNFA33S3N②**	**FHNFA33S11N②**	**FHNFA33S5N①**	9	(5)
80 W/in² **Steel Flange** **1-Incoloy®** (12.4 W/cm²)	16	22⅝	(575)	**FHNFB22L26J②**	**FHNFB22L10J②**	**FHNFB22L3J②**	**FHNFB22L11J②**	**FHNFB22L5J②**	10	(5)

Heater Dimension	Inch	(mm)
A	1 9/16	(40)
C	3 17/32	(90)
D	3⅛	(74)
E	1 9/16	(40)
H	2⅛	(54)

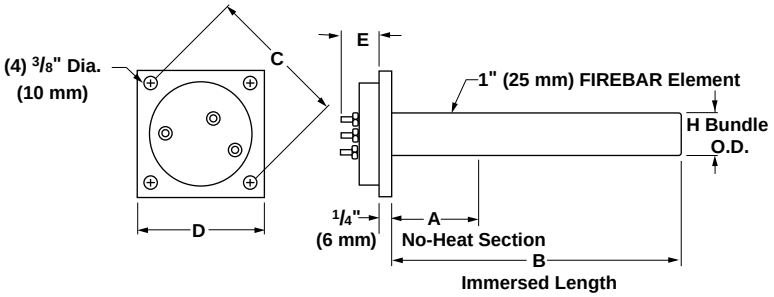

3⅛" Square Flange—FIREBAR Element

FIREBAR Description	kW	Immersed B Dimension Inch	(mm)	Code No. 208V~(ac) 3-Phase	240V~(ac) 3-Phase	480V~(ac) 3-Phase	Est. Ship. Weight lbs	(kg)
Applications: Clean and Potable Water								
80 W/in² **Brass Flange** **1-Incoloy®** (12.4 W/cm²)	18	24½	(622)	**FENFB24J26J①**	**FENFB24J3J②**	**FENFB24J5J①**	12	(6)
Applications: Process Water, Ethylene Glycol (50%)								
40 W/in² **Brass Flange** **1-Incoloy®** (6.2 W/cm²)	9	24½	(622)	**FENFB24J26K②**	**FENFB24J3K②**	**FENFB24J5K②**	12	(6)

Availability
Stock: Same day shipment
Assembly Stock: Five to seven working days
Standard: Six weeks

① Stock
② Standard

Tubular and Process Assemblies

Square Flange Immersion Heaters

Heater Dimension	Inch	(mm)
A	1	(25)
C	3 13/16	(97)
D	4½	(114)
E	2¼	(57)
H	3 7/32	(82)

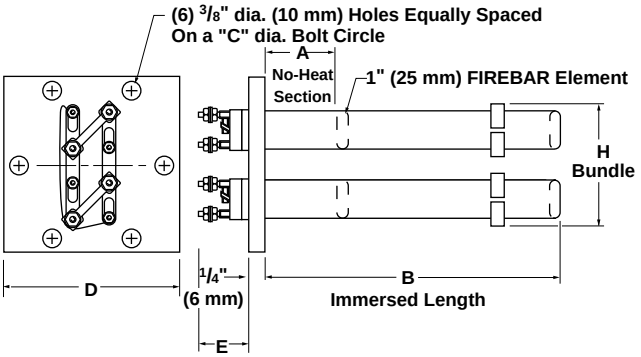

4½" Square Flange—FIREBAR Element

FIREBAR Description	kW	Immersed B Dimension Inch (mm)	Code No. 208V~(ac) 3-Phase	Code No. 240V~(ac) 3-Phase	Code No. 480V~(ac) 3-Phase	Est. Ship. Weight lbs (kg)
Applications: Clean and Potable Water						
100 W/in² **Steel Flange** **2-Incoloy®** (15.5 W/cm²)	18	10½ (267)	**FGNFB10J26N②**	**FGNFB10J3N②**	**FGNFB10J5N①**	16 (8)
70 W/in² **Steel Flange** **2-Incoloy®** (10.9 W/cm²)	12	10½ (267)	**FGNFB10J26P①**	**FGNFB10J3P②**	**FGNFB10J5P①**	16 (8)

Availability
Stock: Same day shipment
Assembly Stock: Five to seven working days
Standard: Six weeks

① Stock
② Standard

How to Order

To order a stock unit, please specify:

- Watlow code number
- Flange size and material
- Volts/watts
- Phase
- Quantity

If our stock units do not meet your application needs, Watlow can provide a made-to-order unit. For **made-to-order** units, please specify:

- Application
- Volts/watts
- Phase
- Flange size, dimensions and material
- Sheath material and diameter
- Number of elements
- No-heat section below the flange
- Immersed ('B' dimension) length
- Maximum bundle diameter (H) or clearance hole size
- Bolt pattern, if not standard
- Options
- Quantity

③ Stock or Assembly Stock units with catalog options.

Availability

Stock: Same day shipment

Assembly Stock: Five to seven working days

Modified Stock③: Five to seven working days

Standard: Three weeks

Made-to-Order: Four to six weeks

Options, complexity and quantity may affect availability and lead times. Consult factory.

Tubular and Process Assemblies

Quick Ship

On stock chart units:
- *Five to seven working days on all Assembly Stock heaters*
- *10 working days on special voltages and/or wattages*
- *15 working days on special element lengths*

Circulation Heaters

Circulation heaters provide a ready-made means to install electric heating with a minimal amount of time and labor. This is accomplished by combining heating elements, vessel, insulation, terminal enclosure, mounting brackets and inlet and outlet connections into a complete assembly.

Made from NPT screw plug or ANSI flange heater assemblies mated with a pressure vessel (tank), circulation heaters are designed to heat forced-circulation air, gases or liquids. Ideal for either in-line or side-arm operations, these assemblies direct fluids past FIREBAR® or WATROD heating elements, to deliver fast response and even heat distribution.

Watlow can meet virtually all your circulation heater assembly needs with made-to-order units. Made-to-order units can be made from a wide range of heating element sheath materials, wattages, vessel sizes and materials, pressure ratings, terminal enclosures and controls.

Performance Capabilities

- Watt densities to 120 W/in^2 (18.6 W/cm^2)
- Wattages to one megawatt
- UL® and CSA component recognition to 480V~(ac) and 600V~(ac) respectively
- Ratings to 600 lb pressure class
- Incoloy® sheath temperatures to 1600°F (870°C)
- Passivated 316 stainless steel sheath temperatures to 1200°F (650°C)
- Steel sheath temperatures to 750°F (400°C)
- Copper sheath temperatures to 350°F (175°C)

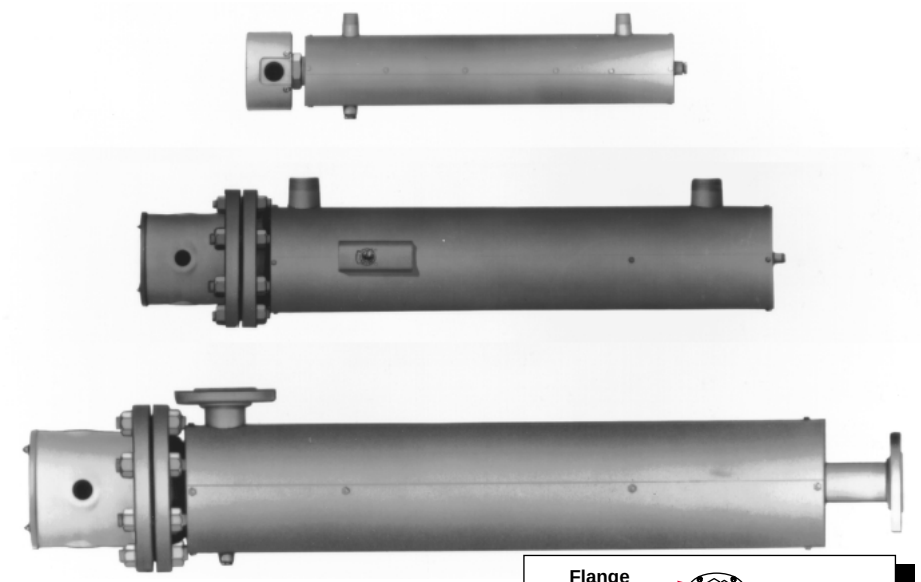

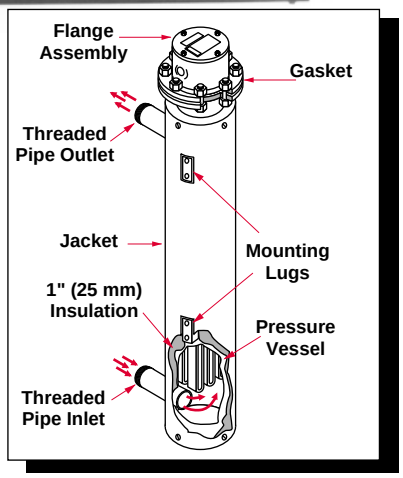

Features and Benefits

- **Standard screw plugs and flanges** feature a wide selection of WATROD and FIREBAR elements to meet specific application requirements.

Type	Sizes (inch)
NPT Screw Plugs	1¼, 2½
ANSI flanges	3, 4, 5, 6, 8, 10, 12, 14

- **Flange ratings meet recognized agency standards**. ANSI B16.5 Class 150 on:

  Four or six inch FIREBAR element flanges

  Three to 14 inch WATROD element flanges
- **FIREBAR assemblies** pack more wattage in a smaller heater bundle—replaces larger flanges with round tubular elements, with a smaller package.
- **Compacted MgO insulation filled elements** maximize dielectric strength, heat transfer and life.
- **One inch (25 mm) thermal insulation**, rated to 750°F (400°C), reduces heat loss from the vessel.
- **Heavy-gauge steel jacket (shroud)** protects thermal insulation and heating vessel. Comes with protective primer coating.
- **All catalog units rated to ANSI pressure Class 150**. Pressure vessels (tanks) are either carbon or 316 stainless steel.
- **NPT or ANSI Class 150 nozzle connections** make installation easy. Inlet and outlet nozzle connections are:

  Threaded MNPT on eight inch and smaller tanks

  Class 150 flanged connections on 10 inch and larger tanks

Circulation Heaters

Features and Benefits

- **Mounting lugs** are welded onto the tank wall of all 2½ inch NPT and larger units. Lugs are flush with outer insulation jacket and provide mounting support.
- **Flange mounting holes** straddle centerline to comply with industry standards.
- **Standard, general purpose (NEMA 1) terminal enclosures** offer easy access to terminal wiring.
- **UL® and CSA component recognition** under file numbers E52951 and 31388 respectively. See **pages 268 to 271** for details.
- **Branch circuits** are subdivided by National Electric Code (NEC) requirements to a maximum of 48 amps per circuit.

Applications

- Water:
  - Deionized
  - Demineralized
  - Clean
  - Potable
  - Process
- Industrial water rinse tanks
- Hydraulic oil, crude, asphalt
- Lubricating oils at API specified watt densities
- Heat transfer oil
- Paraffin
- Caustic cleaners
- Nitrogen, hydrogen and other air/gas systems
- Superheating steam

Options

Terminal Enclosures

General purpose (NEMA 1) terminal enclosures, without thermostats, are supplied on all Watlow circulation heaters. Moisture and explosion resistant ratings are available to meet specific application needs. For screw plug terminal enclosures, refer to **pages 322 to 324**. For flange terminal enclosures, refer to **pages 340 to 341**.

Stand-off Terminal Enclosures

Stand-off terminal enclosures help protect terminal enclosures against excessive temperatures. For details, refer to **page 340**.

CSA Certified Enclosures

To meet agency recognition requirements, CSA certified moisture and/or explosion resistant terminal enclosures are available. Consult your Watlow representative for details.

Thermostats

To provide process temperature control, Watlow offers optional single and double pole thermostats.

Thermostats are typically mounted in the terminal enclosure. Optional side mounting on vessel also available.

See ***Screw Plug Immersion Heaters***, **page 324**, and ***Flange Immersion Heaters***, on **page 342** for details.

Thermocouples

To sense process or element sheath temperature, ASTM Type J or K thermocouples are available.

See ***Screw Plug Immersion Heaters***, **page 325** and ***Flange Immersion Heaters***, on **page 342** for details.

Process Thermocouple in Nozzle

(Must specify which nozzle)

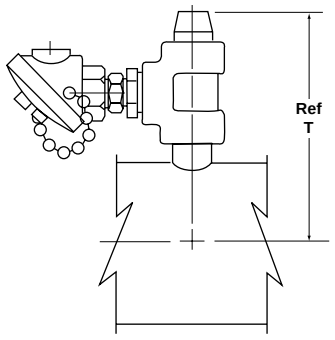

Ref. Tank Size	Ref. Nozzle Size	Dimension "A"
1 ¼	¾ NPT	8 3/16
2 ½	1 NPT	8 3/16
3	1 NPT	8 3/16
4	1 ½ NPT	10 ⅜
5	2 NPT	11 1/16
6	2 ½ NPT	13 ⅜
8	2 ½ NPT	14 ⅜

For 10 inch and larger tanks consult factory for dimension.

Tubular and Process Assemblies

Circulation Heaters

Options
Continued

Branch Circuits

Branch circuits are subdivided by National Electrical Code (NEC) requirements to a maximum of 48 amps per circuit. Consult factory for circuit requirements other than those listed in the stock charts.

Wattages and Voltages

Watlow routinely supplies circulation heaters with 120 to 480V~(ac) as well as wattages from 500 watts to one megawatt. If required, Watlow will configure circulation heaters with voltages and wattages outside these parameters.

For more information on special voltage and wattage configurations, consult your Watlow representative.

Sheath Materials

The following sheath materials are available on WATROD and FIREBAR heating elements:

Standard Sheath Materials

WATROD	Incoloy® 316 stainless steel Steel Copper
FIREBAR	Incoloy®

Made-to-Order Sheath Materials

WATROD	304 stainless steel Monel®
FIREBAR	304 stainless steel

Exotic Sheath Materials

Consult your Watlow representative for details and availability.

Baffles

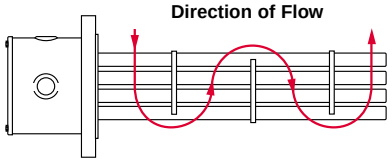

Baffles mounted on the heating element bundle enhance and/or modify liquid or gas flow for better heat transfer.

For critical sheath temperature and low flow conditions, baffles may be required.

Consult your Watlow representative for details.

Pressure Vessels

All standard pressure vessel (tank) materials are rated to 150 lb and made from:

- Carbon steel
- 316 stainless steel

All catalog pressure vessels (tanks) are steel unless otherwise noted.

316 stainless steel pressure vessels (tanks) are passivated on all wetted surfaces. Available from Assembly Stock on 2½ inch NPT and four or six inch ANSI flange circulation heaters.

Made-to-order units can be made in a variety of materials, flange sizes and pressure classes.

To order, specify **pressure vessel (tank) size, material** and **pressure class**.

ANSI ratings to 600 lb are available for high-pressure applications. For pressure class ratings above 600 lb, as well as other vessel materials, consult Watlow Process Systems in Troy, Missouri.

Passivated Finish

For critical applications, passivation will remove free iron from all wetted surfaces.

Consult factory for details.

Monel® is a registered trademark of Special Metals Corporation.

Circulation Heaters

Options

Continued

Gaskets

Rubber, asbestos-free and spiral wound gaskets are available for all heater flange, and inlet and outlet flange sizes.

Watlow recommends ordering spares in case replacement becomes necessary.

To order, specify **gasket type, flange size/rating** and **process operating temperature**.

For details on gasket materials and temperature ratings, see **page 343**.

Inlet and Outlet Nozzle Connections

All inlet and outlet materials are compatible with the pressure vessel material and pressure class rating.

Vessel sizes from 1¼ to eight inches are typically configured with MNPT (Male National Pipe Thread) nozzles. Optional NPT and flange sizes can be supplied to mate with existing piping.

10 inch and larger vessels are supplied with Class 150 inlet and outlet flanges. Optional Class 300 or Class 600 can be provided to mate with existing piping.

To order, specify **type, size** and **pressure class** rating for both inlet and outlet nozzle/flange connections.

High Temperature Thermal Insulation

To further minimize heat loss, the pressure vessel's standard one inch thermal insulation wrap may be replaced with thicker or higher temperature insulation. For more information, consult your Watlow representative.

To order, specify **insulation thickness, standard** or **high temperature insulation** and **temperature rating**.

Vessels may be supplied with a primer coating without insulation.

To order, specify **no insulation**.

Protective Steel Jacket (Shroud)

To protect circulation heaters from weather or wash-down conditions, fully welded (weatherproof) or partially welded (standard) outer protective steel jackets are available. Standard steel, or made-to-order 304 or 316 stainless steel can be supplied. Jacket diameter is dependent upon thermal insulation thickness.

To order, specify **protective steel jacket, material type** and **weatherproof**, if desired.

Support Saddles

To mate with an existing installation, customized support saddle(s) and/or mounting lugs are available.

To order, specify **mounting lugs** or **support saddles** and supply a dimensional drawing.

Tubular and Process Assemblies

Circulation Heaters

Maximum Velocities

The rate at which a gas or liquid flows through inlet and outlet pipes is critical to maintaining the desired output temperature. Pressure drop through the circulation heater must be considered to properly size blowers or pumps. The *Maximum Velocity to Avoid Excessive Pressure Drop* chart gives recommended maximum velocities, in feet per second and meters per second of gas or liquid being heated and nominal pipe size.

Maximum Velocity to Avoid Excessive Pressure Drop

Fluid	Nominal Pipe Size inch	Maximum Velocity ft/sec	(m/sec)
Gases	All	200	(61.0)
Liquid	4 and smaller	10	(3.0)
Liquid	6-8	15	(5.0)
Liquid	10-12	19	(6.0)
Liquid	14-16	21	(6.4)
Liquid	18-20	23	(7.0)
Liquid	24	24	(7.3)

Vessel Orientation Guidelines

Correctly orienting the heating vessel assures lower terminal enclosure temperatures and element immersion. Detailed instructions on vessel orientation are contained in the *Installation and Maintenance Instructions* that accompanies all circulation heaters.

The following are guidelines for vessel orientation in liquid and gas heating applications.

Liquids

Orient circulation heater:

- Horizontally with inlet and outlet pipes pointing up
- Vertically with the terminal enclosure up and the inlet pipe on the bottom

These orientations ensure the heating elements will be immersed at all times and help prevent premature failure.

Air or Gases

Orient circulation heater:

- Horizontally with the inlet nozzle closest to the terminal enclosure.
- Vertically with terminal enclosure at the bottom of the tank. Use the nozzle nearest the bottom as the inlet connection.

If installation constraints do not allow mounting in accordance with these guidelines, consult your Watlow representative.

Application Hints

- Select the recommended heating element sheath material and watt density for the substance being heated. Use the ***Supplemental Applications Chart*** on **pages 263 to 266**. If unable to determine the correct heating element type and material, consult your Watlow representative.
- Assure selecting proper vessel by considering the pressure or flow rate, process temperature and corrosiveness of the media being heated. If assistance with vessel selection is required, consult your Watlow representative.
- For maintenance/replacement procedures, retain an area twice the circulation heater's overall length to permit easy removal and inspection of screw plug or flange heater assemblies.
- Choose a FIREBAR assembly when you require:

  A smaller package

  More kilowatts or lower watt density in an equally sized WATROD circulation tank.
- Minimize problems associated with low flow or low liquid level conditions with a low liquid level sensor and/or sheath high-limit control.
- Ensure wiring integrity by making sure terminal enclosure temperature does not exceed 400°F (205°C).
- Protect against electrical shock by properly grounding the unit per NEC requirements.
- One or more circulation heaters may be connected in series to achieve the desired total kilowatt or temperature output.

Tubular and Process Assemblies

F.O.B.: Hannibal, Missouri

Circulation Heaters

Replacement Heater Assemblies

To help assure minimum process downtime, it's advisable to order and keep on hand a replacement flange or screw plug heater assembly.

Spare and/or replacement screw plug or flange heaters can be ordered by simply providing the complete circulation heater code number and specifying "*replacement heater only.*"

1¼" NPT

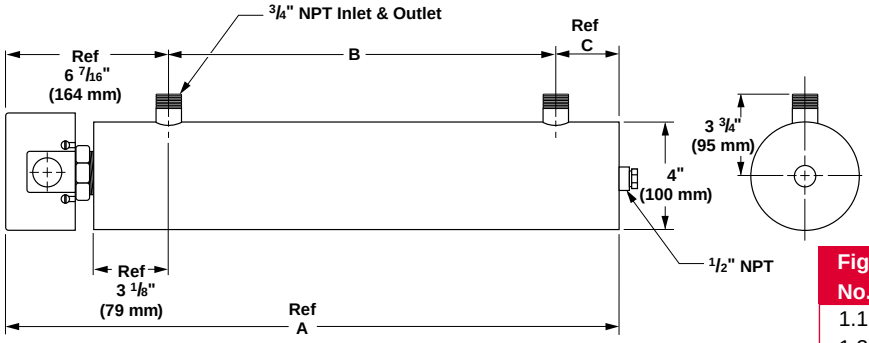

Fig. No.	A Dimension in	A Dimension (mm)	B Dimension in	B Dimension (mm)	C Dimension in	C Dimension (mm)
1.1	24⅝	(625)	15	(381)	3⅛	(79)
1.2	32⅝	(829)	23	(584)	3	(76)
1.3	42⅝	(1083)	32	(813)	4	(102)
1.4	63⅝	(1616)	53	(1346)	4	(102)

1¼" NPT Screw Plug—WATROD Element

WATROD Description	kW	Fig. No.	Code No. 120/240V~(ac) 1-Phase	Code No. 240V~(ac) 1-Phase	Est. Ship. Weight lbs	(kg)
Application: Clean Water						
60 W/in²④	3.0	1.1	**CBEC15A6**		23	(11)
Steel Tank	4.0	1.1		**CBEC19A10**	29	(14)
2-Copper	5.0	1.2		**CBEC23J10**	29	(14)
(9.3 W/cm²)	6.0	1.2		**CBEC27J10**	31	(14)
Applications: Forced Air and Gases, Caustic Solutions, Degreasing Solutions						
23 W/in²④	1.0	1.1	**CBEN13G6**		21	(10)
Steel Tank	1.5	1.1	**CBEN19A6**		29	(14)
2-Incoloy®	2.0	1.2	**CBEN24G6**		29	(14)
(3.6 W/cm²)						
Applications: Lightweight Oils, Degreasing Solutions, Heat Transfer Oils						
23 W/in²④	1.5	1.1	**CBES19G6**		29	(14)
Steel Tank	2.0	1.2	**CBES25G6**		29	(14)
2-Steel						
(3.6 W/cm²)						

All circulation heaters are Assembly Stock unless otherwise noted.

Availability
Assembly Stock: Five to seven working days
Standard: 10 working days

④ Wired for higher voltage.

Tubular and Process Assemblies

Circulation Heaters

1¼" NPT Screw Plug—FIREBAR Element

FIREBAR Description	kW	Fig. No.	Code No. 240V~(ac) 1-Phase	Code No. 240V~(ac) 3-Phase	Code No. 480V~(ac) 1-Phase	Code No. 480V~(ac) 3-Phase	Est. Ship. Weight lbs	(kg)
Applications: Clean and Potable Water								
90 W/in²⑧	1.5	1.1	**CBDNF7R10②⑦**		**CBDNF7R11②⑦**		26	(12)
Steel Tank	3.0	1.1	**CBDNF11G10②⑦**		**CBDNF11G11②**		26	(12)
1-Incoloy®	5.0	1.1		**CBDNF16G3**		**CBDNF16G5**	26	(12)
(14 W/cm²)	6.5	1.2		**CBDNF19G3**		**CBDNF19G5**	30	(14)
	8.5	1.2		**CBDNF24L3**		**CBDNF24L5**	31	(14)
	10.5	1.3		**CBDNF29R3**		**CBDNF29R5**	43	(20)
	12.75	1.3		**CBDNF34R3**		**CBDNF34R5**	44	(20)
	17.0	1.4		**CBDNF45G3**		**CBDNF45G5**	69	(32)
	21.5	1.4				**CBDNF55R5**	71	(33)
Applications: Process Water, Ethylene Glycol (50%)								
45 W/in²⑧	2.0	1.1		**CBDNF13A27**			25	(12)
Steel Tank	2.5	1.1		**CBDNF15J27**			26	(12)
1-Incoloy®	3.0	1.2		**CBDNF18A27**			30	(14)
(7 W/cm²)	4.0	1.2		**CBDNF22J27**		**CBDNF22J28**	31	(14)
	5.0	1.3		**CBDNF27J27**		**CBDNF27J28**	43	(20)
	6.0	1.3		**CBDNF32J27**		**CBDNF32J28**	44	(20)
	8.0	1.4		**CBDNF42A27**		**CBDNF42A28**	69	(32)
	10.0	1.4		**CBDNF51J27**		**CBDNF51J28**	71	(33)
Applications: Cooking Oils, Ethylene Glycol (100%)								
30 W/in²③	1.7	1.1		**CBDNF16G12**		**CBDNF16G13**	26	(12)
Steel Tank	2.2	1.2		**CBDNF19G12**		**CBDNF19G13**	30	(14)
1-Incoloy®	2.8	1.2		**CBDNF24L12**		**CBDNF24L13**	31	(14)
(4.7 W/cm²)	3.5	1.3		**CBDNF29R12**		**CBDNF29R13**	43	(20)
	4.25	1.3		**CBDNF34R12**		**CBDNF34R13**	44	(20)
	5.7	1.4		**CBDNF45G12**		**CBDNF45G13**	69	(32)
	7.2	1.4		**CBDNF55R12**		**CBDNF55R13**	71	(33)
Applications: Heat Transfer Oils, Lubrication Oils, Mineral Oil, Degreasing Solutions								
23 W/in²⑧	1.25	1.1		**CBDNF16G20**			26	(12)
Steel Tank	1.65	1.2		**CBDNF19G20**			30	(14)
1-Incoloy®	2.15	1.2		**CBDNF24L20**		**CBDNF24L19**	31	(14)
(3.6 W/cm²)	2.65	1.3		**CBDNF29R20**		**CBDNF29R19**	43	(20)
	3.20	1.3		**CBDNF34R20**		**CBDNF34R19**	44	(20)
	4.25	1.4		**CBDNF45G20**		**CBDNF45G19**	69	(32)
	5.40	1.4		**CBDNF55R20**		**CBDNF55R19**	71	(33)

CONTINUED

All circulation heaters are Assembly Stock unless otherwise noted.
Availability
Assembly Stock: Five to seven working days
Standard: 10 working days
Truck Shipment only

② Standard
③ Must be operated 3-phase wye.
⑦ Available in 1-phase only.
⑧ Can be wired 1-phase.

Tubular and Process Assemblies

Circulation Heaters

1¼" NPT Screw Plug—FIREBAR Element

FIREBAR Description	kW	Fig. No.	Code No. 240V~(ac) 1-Phase	240V~(ac) 3-Phase	480V~(ac) 1-Phase	480V~(ac) 3-Phase	Est. Ship. Weight lbs	(kg)
Applications: Medium Weight Oils, Heat Transfer Oils, Lube Oils, Liquid Paraffin								
15 W/in²③	0.67	1.1		**CBDNF13A29**			25	(12)
Steel Tank	0.83	1.1		**CBDNF15J29**			26	(12)
1-Incoloy®	1.00	1.2		**CBDNF18A29**			30	(14)
(2.3 W/cm²)	1.33	1.2		**CBDNF22J29**		**CBDNF22J30**	31	(14)
	1.67	1.3		**CBDNF27J29**		**CBDNF27J30**	43	(20)
	2.00	1.3		**CBDNF32J29**		**CBDNF32J30**	44	(20)
	2.67	1.4		**CBDNF42A29**		**CBDNF42A30**	69	(32)
	3.30	1.4		**CBDNF51J29**		**CBDNF51J30**	71	(33)
Applications: Bunker C and #6 Fuel Oils, Asphalt								
8 W/in²③	0.43	1.1		**CBDNF16G22**			26	(12)
Steel Tank	0.55	1.2		**CBDNF19G22**			30	(14)
1-Incoloy®	0.70	1.2		**CBDNF24L22**		**CBDNF24L21**	31	(14)
(1.3 W/cm²)	0.88	1.3		**CBDNF29R22**		**CBDNF29R21**	43	(20)
	1.08	1.3		**CBDNF34R22**		**CBDNF34R21**	44	(20)
	1.40	1.4		**CBDNF45G22**		**CBDNF45G21**	69	(31)
	1.80	1.4		**CBDNF55R22**		**CBDNF55R21**	71	(32)

All circulation heaters are Assembly Stock unless otherwise noted.

Availability
Assembly Stock: Five to seven working days
Standard: 10 working days

Truck Shipment only
③ Must be operated 3-phase wye only.

2½" NPT

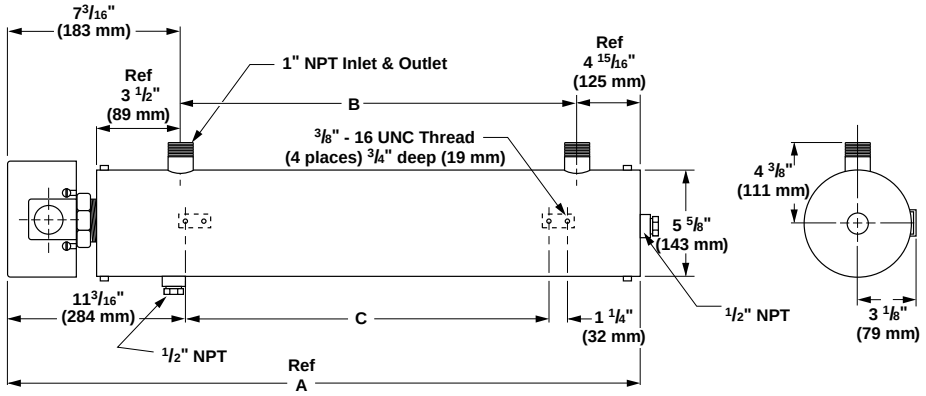

2½" NPT Screw Plug

Fig. No.	A Dimension in	(mm)	B Dimension in	(mm)	C Dimension in	(mm)
2.1	34 11/16	(881)	22½	(572)	16½	(419)
2.2	44 11/16	(1135)	32½	(1129)	26½	(673)
2.3	57 3/16	(1453)	45	(1143)	39	(991)
2.4	63 11/16	(1618)	51½	(1308)	46½	(1181)
2.5	34 11/16	(881)	22½	(572)	16½	(419)
2.6	44 11/16	(1135)	32½	(1129)	26½	(673)
2.7	57 3/16	(1453)	45	(1143)	39	(991)

Tubular and Process Assemblies

Circulation Heaters

2½" NPT Screw Plug—WATROD Element

WATROD Description	kW	Fig. No.	Code No. 240V~(ac) 3-Phase	Code No. 480V~(ac) 3-Phase	Est. Ship. Weight lbs	(kg)
Application: Clean Water						
60 W/in²	6.0	2.5	**CBLC714L3**	**CBLC714L5**	24	(11)
Steel Tank	7.5	2.5	**CBLC717L3**	**CBLC717L5**	24	(11)
3-Copper	9.0	2.5	**CBLC720L3**	**CBLC720L5**	26	(12)
(9.3 W/cm²)	12.0	2.6	**CBLC726C3**	**CBLC726C5**	27	(13)
	15.0	2.6	**CBLC731L3**	**CBLC731L5**	29	(14)
	18.0	2.7	**CBLC737C3**	**CBLC737C5**	30	(14)
Application: Deionized Water, Demineralized Water						
60 W/in²	6.0	2.5	**CBLR714L3**	**CBLR714L5**	24	(11)
316 SS Tank	7.5	2.5	**CBLR717L3**	**CBLR717L5**	24	(11)
3-316 SS	9.0	2.5	**CBLR720L3**	**CBLR720L5**	26	(12)
(9.3 W/cm²)	12.0	2.6	**CBLR726C3**	**CBLR726C5**	27	(13)
Passivated	15.0	2.6	**CBLR731L3**	**CBLR731L5**	29	(14)
	18.0	2.7	**CBLR737C3**	**CBLR737C5**	30	(14)
Application: Process Water						
48 W/in²	6.0	2.5	**CBLN717G3**	**CBLN717G5**	24	(11)
Steel Tank	7.5	2.5	**CBLN719R3**	**CBLN719R5**	26	(12)
3-Incoloy®	9.0	2.5	**CBLN724R3**	**CBLN724R5**	27	(13)
(7.5 W/cm²)	12.0	2.6	**CBLN732G3**	**CBLN732G5**	29	(14)
	15.0	2.7	**CBLN739R3**	**CBLN739R5**	31	(14)
	18.0	2.7	**CBLN747G3**	**CBLN747G5**	32	(15)
Applications: Forced Air and Gases, Caustic Solutions, Degreasing Solutions						
23 W/in²⑤⑥	3.0	2.5	**CBLNA17G3**	**CBLNA17G5**	24	(11)
Steel Tank	4.5	2.6	**CBLNA24R3**	**CBLNA24R5**	27	(13)
3-Incoloy®	6.0	2.6	**CBLNA32G3**	**CBLNA32G5**	29	(14)
(3.6 W/cm²)	7.5	2.7	**CBLNA39R3**	**CBLNA39R5**	31	(14)
	9.0	2.7	**CBLNA47G3**	**CBLNA47G5**	32	(15)
Applications: Lightweight Oils, Degreasing Solutions, Heat Transfer Oils						
23 W/in²⑥	3.0	2.5	**CBLS717E3**	**CBLS717E5**	24	(11)
Steel Tank	4.5	2.5	**CBLS724N3**	**CBLS724N5**	27	(13)
3-Steel	6.0	2.6	**CBLS732E3**	**CBLS732E5**	29	(14)
(3.6 W/cm²)	7.5	2.7	**CBLS739N3**	**CBLS739N5**	31	(14)
	9.0	2.7	**CBLS747E3**	**CBLS747E5**	32	(15)
Applications: Medium Weight Oils, Heat Transfer Oils, Lube Oils, Liquid Paraffin						
16 W/in²③	2.0	2.5	**CBLN717G12**	**CBLN717G13**	24	(11)
Steel Tank	2.5	2.5	**CBLN719R12**	**CBLN719R13**	26	(12)
3-Incoloy®	3.0	2.5	**CBLN724R12**	**CBLN724R13**	27	(13)
(2.5 W/cm²)	4.0	2.6	**CBLN732G12**	**CBLN732G13**	29	(14)
	5.0	2.7	**CBLN739R12**	**CBLN739R13**	31	(14)
	6.0	2.7	**CBLN747G12**	**CBLN747G13**	32	(15)
Applications: Bunker C and #6 Fuel Oils						
8 W/in²③	2.0	2.6	**CBLS732E12**	**CBLS732E13**	29	(14)
Steel Tank	3.0	2.7	**CBLS747E12**	**CBLS747E13**	32	(15)
3-Steel						
(1.3 W/cm²)						

All circulation heaters are Assembly Stock unless otherwise noted.
Availability
Assembly Stock: Five to seven working days
Standard: 10 working days

③ Must be operated 3-phase wye only.
⑤ 240V~(ac) can be wired wye and operated at 480V~(ac) 3-phase to produce ⅓ more kW and watt density.
⑥ Can be wired wye to produce ⅓ of the original kW and watt density (3-phase only).

Tubular and Process Assemblies

Circulation Heaters

2½" NPT Screw Plug—FIREBAR Element

FIREBAR Description	kW	Fig. No.	Code No. 240V~(ac) 3-Phase	Code No. 480V~(ac) 3-Phase	Est. Ship. Weight lbs	(kg)
Applications: Clean and Potable Water						
90 W/in²⑧	15.0	2.1	**CBLNF15C3**	**CBLNF15C5**	22	(10)
Steel Tank	20.0	2.1	**CBLNF18C3**	**CBLNF18C5③**	23	(11)
3-Incoloy®	25.0	2.1		**CBLNF23C5**	31	(14)
(14 W/cm²)	32.0	2.2		**CBLNF28L5**	34	(16)
	38.0	2.2		**CBLNF33L5**	35	(16)
Applications: Process Water, Ethylene Glycol (50%)						
45 W/in²⑧	6.0	2.1	**CBLNF12A27**		21	(10)
Steel Tank	7.5	2.1	**CBLNF14J27**		22	(10)
3-Incoloy®	9.0	2.1	**CBLNF17A27**		23	(11)
(7 W/cm²)	12.0	2.1	**CBLNF21J27**	**CBLNF21J28**	31	(14)
	15.0	2.2	**CBLNF26J27**	**CBLNF26J28**	34	(16)
	18.0	2.2	**CBLNF31J27**	**CBLNF31J28**	35	(16)
	24.0	2.3		**CBLNF41A28**	44	(20)
	30.0	2.4		**CBLNF50J28**	52	(24)
Applications: Cooking Oils, Ethylene Glycol (100%)						
30 W/in²③	5.0	2.1	**CBLNF15C12**	**CBLNF15C13**	22	(10)
Steel Tank	6.5	2.1	**CBLNF18C12**	**CBLNF18C13**	23	(11)
3-Incoloy®	8.5	2.1	**CBLNF23C12**	**CBLNF23C13**	31	(14)
(4.7 W/cm²)	10.5	2.2	**CBLNF28L12**	**CBLNF28L13**	34	(16)
	12.8	2.2	**CBLNF33L12**	**CBLNF33L13**	35	(16)
	17.0	2.3	**CBLNF44C12**	**CBLNF44C13**	44	(20)
	21.5	2.4		**CBLNF54L13**	52	(24)
Applications: Heat Transfer Oils, Mineral Oil, Degreasing Solutions						
23 W/in²⑧	3.8	2.1	**CBLNF15C20**		22	(10)
Steel Tank	4.9	2.1	**CBLNF18C20**		23	(11)
3-Incoloy®	6.4	2.1	**CBLNF23C20**	**CBLNF23C19**	31	(14)
(3.6 W/cm²)	7.9	2.2	**CBLNF28L20**	**CBLNF28L19**	34	(16)
	9.6	2.2	**CBLNF33L20**	**CBLNF33L19**	35	(16)
	12.8	2.3	**CBLNF44C20**	**CBLNF44C19**	44	(20)
	16.1	2.4	**CBLNF54L20**	**CBLNF54L19**	52	(24)
Applications: Medium Weight Oils, Heat Transfer Oils, Lube Oils, Liquid Paraffin						
15 W/in²③	2.0	2.1	**CBLNF12A29**		21	(10)
Steel Tank	2.5	2.1	**CBLNF14J29**		22	(10)
3-Incoloy®	3.0	2.1	**CBLNF17A29**		23	(11)
(2.3 W/cm²)	4.0	2.1	**CBLNF21J29**	**CBLNF21J30**	31	(14)
	5.0	2.2	**CBLNF26J29**	**CBLNF26J30**	34	(16)
	6.0	2.2	**CBLNF31J29**	**CBLNF31J30**	35	(16)
	8.0	2.3	**CBLNF41A29**	**CBLNF41A30**	44	(20)
	10.0	2.4	**CBLNF50J29**	**CBLNF50J30**	52	(24)
Applications: Bunker C and #6 Fuel Oils, Asphalt						
8 W/in²③	1.25	2.1	**CBLNF15C22**		22	(10)
Steel Tank	1.63	2.1	**CBLNF18C22**		23	(10)
3-Incoloy®	2.13	2.1	**CBLNF23C22**	**CBLNF23C21**	31	(14)
(1.3 W/cm²)	2.63	2.2	**CBLNF28L22**	**CBLNF28L21**	34	(15)
	3.19	2.2	**CBLNF33L22**	**CBLNF33L21**	35	(16)
	4.25	2.3	**CBLNF44C22**	**CBLNF44C21**	44	(20)
	5.38	2.4	**CBLNF54L22**	**CBLNF54L21**	52	(24)

All circulation heaters are Assembly Stock unless otherwise noted.
Availability
Assembly Stock: Five to seven working days
Standard: 10 working days
Note: Assembly Stock may be shipped same day if ordered before 11:00 am CST.

③ Must be operated 3-phase wye only.
⑧ Can be wired 1-phase.

Tubular and Process Assemblies

Circulation Heaters

3" Flange

Fig. No.	A Dimension in	A Dimension (mm)	B Dimension in	B Dimension (mm)	C Dimension in	C Dimension (mm)
3.1	35 3/16	(894)	22½	(573)	16½	(419)
3.2	45 3/16	(1148)	32½	(826)	26½	(673)
3.3	57 11/16	(1465)	45	(1143)	39	(991)

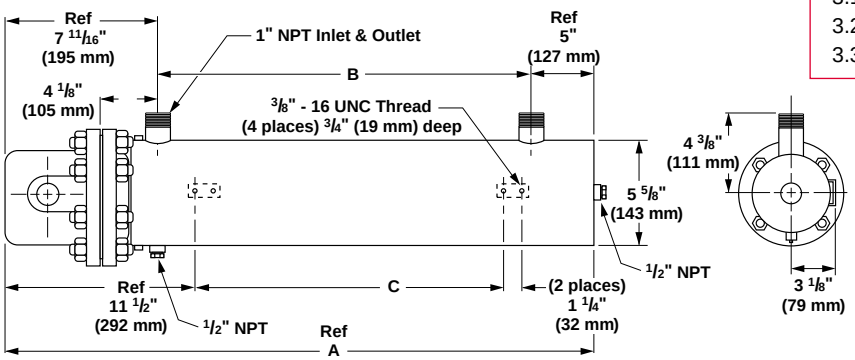

3" 150 lb ANSI Flange—WATROD Element

WATROD Description	kW	Fig. No.	Code No. 240V~(ac) 1-Phase	240V~(ac) 3-Phase	480V~(ac) 1-Phase	480V~(ac) 3-Phase	Est. Ship. Weight lbs	(kg)
Application: Clean Water								
60 W/in²	6.0	3.1	**CFMC715J10**	**CFMC715J3**	**CFMC715J11**	**CFMC715J5**	66	(30)
Steel Tank	9.0	3.1	**CFMC721J10**	**CFMC721J3**	**CFMC721J11**	**CFMC721J5**	70	(32)
3-Copper	12.0	3.2		**CFMC727A3**	**CFMC727A11**	**CFMC727A5**	80	(37)
(9.3 W/cm²)	15.0	3.2		**CFMC732J3**	**CFMC732J11**	**CFMC732J5**	96	(44)
	18.0	3.3		**CFMC738A3**	**CFMC738A11**	**CFMC738A5**	98	(45)
Application: Process Water								
48 W/in²⑤	6.0	3.1	**CFMN718A10**	**CFMN718A3**	**CFMN718A11**	**CFMN718A5**	68	(31)
Steel Tank	7.5	3.1	**CFMN720J10**	**CFMN720J3**	**CFMN720J11**	**CFMN720J5**	70	(32)
3-Incoloy®	9.0	3.2	**CFMN725J10**	**CFMN725J3**	**CFMN725J11**	**CFMN725J5**	78	(36)
(7.5 W/cm²)	12.0	3.2		**CFMN733A3**	**CFMN733A11**	**CFMN733A5**	96	(44)
	15.0	3.3		**CFMN740J3**	**CFMN740J11**	**CFMN740J5**	100	(46)
	18.0	3.3		**CFMN748A3**	**CFMN748A11**	**CFMN748A5**	107	(49)
Applications: Forced Air and Gases, Caustic Solutions, Degreasing Solutions								
23 W/in²⑤⑥	3.0	3.1	**CFMNA18A10**	**CFMNA18A3**	**CFMNA18A11**	**CFMNA18A5**	68	(31)
Steel Tank	4.5	3.2	**CFMNA25J10**	**CFMNA25J3**	**CFMNA25J11**	**CFMNA25J5**	78	(36)
3-Incoloy®	6.0	3.2	**CFMNA33A10**	**CFMNA33A3**	**CFMNA33A11**	**CFMNA33A5**	96	(44)
(3.6 W/cm²)	7.5	3.3	**CFMNA40J10**	**CFMNA40J3**	**CFMNA40J11**	**CFMNA40J5**	100	(46)
	9.0	3.3	**CFMNA48A10**	**CFMNA48A3**	**CFMNA48A11**	**CFMNA48A5**	107	(49)

CONTINUED

All circulation heaters are Assembly Stock unless otherwise noted.
Availability
Assembly Stock: Five to seven working days
Standard: 10 working days
Truck Shipment only

⑤ 240V~(ac) can be wired wye and operated at 480V~(ac) 3-phase to produce ⅓ more kW and watt density.
⑥ Can be wired wye to produce ⅓ of the original kW and watt density (3-phase only).

Tubular and Process Assemblies

Circulation Heaters

3" 150 lb ANSI Flange—WATROD Element

WATROD Description	kW	Fig. No.	Code No. 240V~(ac) 1-Phase	Code No. 240V~(ac) 3-Phase	Code No. 480V~(ac) 1-Phase	Code No. 480V~(ac) 3-Phase	Est. Ship. Weight lbs	(kg)
Applications: Lightweight Oils, Degreasing Solutions, Heat Transfer Oils								
23 W/in²	3.0	3.1	**CFMS718A10**	**CFMS718A3**	**CFMS718A11**	**CFMS718A5**	68	(31)
Steel Tank	4.5	3.1	**CFMS725J10**	**CFMS725J3**	**CFMS725J11**	**CFMS725J5**	78	(36)
3-Steel	6.0	3.2	**CFMS733A10**	**CFMS733A3**	**CFMS733A11**	**CFMS733A5**	96	(44)
(3.6 W/cm²)	7.5	3.3	**CFMS740J10**	**CFMS740J3**	**CFMS740J11**	**CFMS740J5**	100	(46)
	9.0	3.3	**CFMS748A10**	**CFMS748A3**	**CFMS748A11**	**CFMS748A5**	107	(49)
Applications: Medium Weight Oils, Heat Transfer Oils, Lube Oils, Liquid Paraffin								
16 W/in²③	2.0	3.1		**CFMN718A12**		**CFMN718A13**	68	(31)
Steel Tank	2.5	3.1		**CFMN720J12**		**CFMN720J13**	70	(32)
3-Incoloy®	3.0	3.2		**CFMN725J12**		**CFMN725J13**	78	(36)
(2.6 W/cm²)	4.0	3.2		**CFMN733A12**		**CFMN733A13**	96	(44)
	5.0	3.3		**CFMN740J12**		**CFMN740J13**	100	(46)
	6.0	3.3		**CFMN748A12**		**CFMN748A13**	107	(49)
Applications: Bunker C and #6 Fuel Oils								
8 W/in²③	2.0	3.2		**CFMS733A12**		**CFMS733A13**	96	(44)
Steel Tank	3.0	3.3		**CFMS748A12**		**CFMS748A13**	107	(49)
3-Steel								
(1.3 W/cm²)								

All circulation heaters are Assembly Stock unless otherwise noted.

Availability

Assembly Stock: Five to seven working days

Standard: 10 working days

Truck Shipment only

③ Must be operated 3-phase wye only.

Tubular and Process Assemblies

Circulation Heaters

4" Flange

Fig. No.	A Dimension in	(mm)	B Dimension in	(mm)	C Dimension in	(mm)
4.1	38 15/16	(989)	20½	(521)	17	(432)
4.2	49 7/16	(1256)	31	(787)	27½	(699)
4.3	70 7/16	(1789)	52	(1321)	48½	(1232)
4.4	91 7/16	(2326)	73	(1854)	66	(1676)

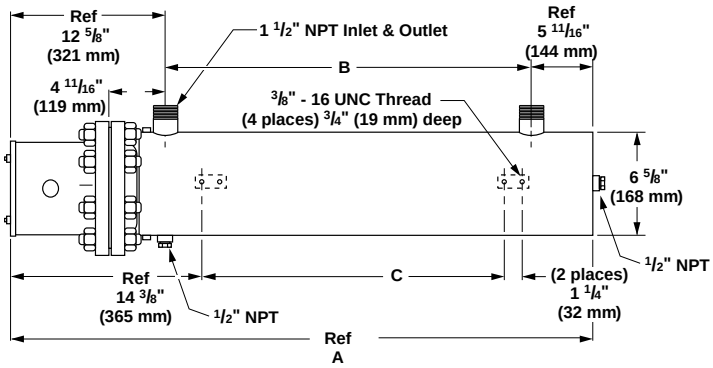

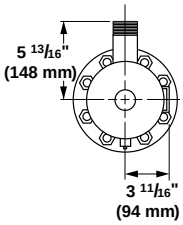

4" 150 lb ANSI Flange—WATROD Element

WATROD Description	kW	Fig. No.	Code No. 240V~(ac) 1-Phase	No. of Circuits	240V~(ac) 3-Phase	No. of Circuits	480V~(ac) 1-Phase	No. of Circuits	480V~(ac) 3-Phase	No. of Circuits	Est. Ship. Weight lbs	(kg)
Application: Clean Water												
60 W/in²	12	4.1	**CFOC715J10**	2	**CFOC715J3**	1	**CFOC715J11**	1	**CFOC715J5**	1	124	(57)
Steel Tank	18	4.1	**CFOC721J10**	2	**CFOC721J3**	1	**CFOC721J11**	1	**CFOC721J5**	1	127	(58)
6-Copper	24	4.2	**CFOC727A10**	2	**CFOC727A3**	2	**CFOC727A11**	1	**CFOC727A5**	1	160	(73)
(9.3 W/cm²)	30	4.2			**CFOC732J3**	2	**CFOC732J11**	2	**CFOC732J5**	1	163	(74)
	36	4.3			**CFOC738A3**	2	**CFOC738A11**	2	**CFOC738A5**	1	229	(104)
	50	4.3							**CFOC751A5**②	2	234	(107)
	60	4.4							**CFOC760J5**②	2	297	(135)
Application: Deionized Water, Demineralized Water												
60 W/in²	12	4.1	**CFOR716A10**	1	**CFOR716A3**	1	**CFOR716A11**	1	**CFOR716A5**	1	124	(57)
316 SS Tank	18	4.1	**CFOR722A10**	2	**CFOR722A3**	1	**CFOR722A11**	1	**CFOR722A5**	1	127	(58)
6-316 SS	24	4.2	**CFOR727J10**	2	**CFOR727J3**	2	**CFOR727J11**	1	**CFOR727J5**	1	160	(73)
(9.3 W/cm²)	30	4.2			**CFOR733A3**	2	**CFOR733A11**	2	**CFOR733A5**	1	163	(74)
Passivated	36	4.3			**CFOR738J3**	2	**CFOR738J11**	2	**CFOR738J5**	1	229	(104)
	50	4.3							**CFOR751J5**	2	234	(106)
	60	4.4							**CFOR761A5**	2	297	(135)
Application: Process Water												
48 W/in²	9	4.1	**CFON713J10**	1	**CFON713J3**	1	**CFON713J11**	1	**CFON713J5**	1	122	(56)
Steel Tank	12	4.1	**CFON718A10**	2	**CFON718A3**	1	**CFON718A11**	1	**CFON718A5**	1	125	(57)
6-Incoloy®	15	4.1	**CFON720J10**	2	**CFON720J3**	1	**CFON720J11**	2	**CFON720J5**	1	127	(58)
(7.5 W/cm²)	18	4.1	**CFON725J10**	2	**CFON725J3**	1	**CFON725J11**	1	**CFON725J5**	1	160	(73)
	24	4.2	**CFON733A10**	2	**CFON733A3**	2	**CFON733A11**	1	**CFON733A5**	1	163	(74)
	30	4.3			**CFON740J3**	2	**CFON740J11**	2	**CFON740J5**	1	229	(104)
	36	4.3			**CFON748A3**	2	**CFON748A11**	2	**CFON748A5**	1	234	(107)

CONTINUED

All circulation heaters are Assembly Stock unless otherwise noted.

② Standard

Availability

Assembly Stock: Five to seven working days

Standard:10 working days

Truck Shipment only

Tubular and Process Assemblies

Circulation Heaters

4" 150 lb ANSI Flange—WATROD Element

WATROD Description	kW	Fig. No.	Code No. 240V~(ac) 1-Phase	No. of Circuits	240V~(ac) 3-Phase	No. of Circuits	480V~(ac) 1-Phase	No. of Circuits	480V~(ac) 3-Phase	No. of Circuits	Est. Ship. Weight lbs (kg)
Applications: Forced Air and Gases, Caustic Solutions, Degreasing Solutions											
23 W/in²⑤⑥	6	4.1	**CFONA18A10**	1	**CFONA18A3**	1	**CFONA18A11**	1	**CFONA18A5**	1	125 (57)
Steel Tank	9	4.1	**CFONA25J10**	1	**CFONA25J3**	1	**CFONA25J11**	1	**CFONA25J5**	1	160 (73)
6-Incoloy®	12	4.2	**CFONA33A10**	2	**CFONA33A3**	1	**CFONA33A11**	1	**CFONA33A5**	1	163 (74)
(3.6 W/cm²)	15	4.3	**CFONA40J10**	2	**CFONA40J3**	1	**CFONA40J11**	1	**CFONA40J5**	1	229 (104)
	18	4.3	**CFONA48A10**	2	**CFONA48A3**	1	**CFONA48A11**	1	**CFONA48A5**	1	234 (107)
	25	4.4			**CFONA64J3**	2	**CFONA64J11**	2	**CFONA64J5**	1	298 (136)
	30	4.4			**CFONA77A3**	2	**CFONA77A11**	2	**CFONA77A5**	1	306 (139)
Applications: Lightweight Oils, Degreasing Solutions, Heat Transfer Oils											
23 W/in²	6	4.1	**CFOS718A10**	1	**CFOS718A3**	1	**CFOS718A11**	1	**CFOS718A5**	1	125 (57)
Steel Tank	9	4.1	**CFOS725J10**	1	**CFOS725J3**	1	**CFOS725J11**	1	**CFOS725J5**	1	160 (73)
6-Steel	12	4.2	**CFOS733A10**	2	**CFOS733A3**	1	**CFOS733A11**	1	**CFOS733A5**	1	163 (74)
(3.6 W/cm²)	15	4.3	**CFOS740J10**	2	**CFOS740J3**	1	**CFOS740J11**	1	**CFOS740J5**	1	229 (104)
	18	4.3	**CFOS748A10**	2	**CFOS748A3**	1	**CFOS748A11**	1	**CFOS748A5**	1	234 (107)
	25	4.4			**CFOS764J3**	2	**CFOS764J11**	2	**CFOS764J5**	1	298 (136)
	30	4.4			**CFOS777A3**	2	**CFOS777A11**	2	**CFOS777A5**	1	306 (139)
Applications: Medium Weight Oils, Heat Transfer Oils, Liquid Paraffin											
16 W/in²③	3	4.1			**CFON713J12**	1			**CFON713J13**	1	122 (56)
Steel Tank	4	4.1			**CFON718A12**	1			**CFON718A13**	1	125 (57)
6-Incoloy®	5	4.1			**CFON720J12**	1			**CFON720J13**	1	127 (58)
(2.6 W/cm²)	6	4.1			**CFON725J12**	1			**CFON725J13**	1	160 (73)
	8	4.2			**CFON733A12**	1			**CFON733A13**	1	163 (74)
	10	4.3			**CFON740J12**	2			**CFON740J13**	1	229 (104)
	12	4.3			**CFON748A12**	1			**CFON748A13**	1	234 (107)
Applications: Bunker C and #6 Fuel Oils											
8 W/in²③	5	4.3			**CFOS740J12**	1			**CFOS740J13**	1	229 (104)
Steel Tank	6	4.3			**CFOS748A12**	1			**CFOS748A13**	1	234 (106)
6-Steel	8	4.4			**CFOS764J12**	1			**CFOS764J13**	1	298 (135)
(1.3 W/cm²)	10	4.4			**CFOS777A12**	1			**CFOS777A13**	1	306 (139)

All circulation heaters are Assembly Stock unless otherwise noted.

Availability

Assembly Stock: Five to seven working days

Standard: 10 working days

Truck Shipment only

③ Must be operated 3-phase wye only.

⑤ 240V~(ac) can be wired wye and operated at 480V~(ac) 3-phase to produce ⅓ more kW and watt density.

⑥ Can be wired wye to produce ⅓ of the original kW and watt density (3-phase only).

Tubular and Process Assemblies

Circulation Heaters

4" 150 lb ANSI Flange—FIREBAR Element

FIREBAR Description	kW	Fig. No.	Code No. 240V~(ac) 3-Phase	No. of Circuits	Code No. 480V~(ac) 3-Phase	No. of Circuits	Est. Ship. Weight lbs (kg)
Applications: Process Water, Ethylene Glycol (50%)							
45 W/in²	12.0	4.1	**CFONF13G27**	1			125 (57)
Steel Tank	15.0	4.1	**CFONF16A27**	1			128 (58)
6-Incoloy®	18.0	4.1	**CFONF18G27**	1			130 (59)
(7 W/cm²)	24.0	4.1	**CFONF22R27**	2	**CFONF22R28**	1	133 (61)
	30.0	4.2	**CFONF27R27**	2	**CFONF27R28**	1	168 (77)
	36.0	4.2	**CFONF32R27**	2	**CFONF32R28**	1	170 (78)
	48.0	4.3			**CFONF42G28**	2	236 (107)
	60.0	4.3			**CFONF51R28**	2	240 (109)
Applications: Cooking Oils, Ethylene Glycol (100%)							
30 W/in²	10.0	4.1	**CFONF16J12**	1	**CFONF16J13**	1	128 (58)
Steel Tank	13.0	4.1	**CFONF19J12**	1	**CFONF19J13**	1	130 (59)
6-Incoloy®	17.0	4.1	**CFONF24J12**	1	**CFONF24J13**	1	133 (61)
(4.7 W/cm²)	21.0	4.2	**CFONF30A12**	2	**CFONF30A13**	1	168 (77)
	25.5	4.2	**CFONF35A12**	2	**CFONF35A13**	1	170 (78)
	34.0	4.3	**CFONF45J12**	2	**CFONF45J13**	1	236 (107)
	43.0	4.3			**CFONF56A13**	2	240 (109)
Applications: Heat Transfer Oils, Mineral Oils, Degreasing Solutions							
23 W/in²④	7.5	4.1	**CFONF16J20**	1			128 (58)
Steel Tank	10.0	4.1	**CFONF19J20**	1			130 (59)
6-Incoloy®	12.8	4.1	**CFONF24J20**	1	**CFONF24J19**	1	133 (61)
(3.6 W/cm²)	15.8	4.2	**CFONF30A20**	1	**CFONF30A19**	1	168 (77)
	19.0	4.2	**CFONF35A20**	1	**CFONF35A19**	1	170 (78)
	25.0	4.3	**CFONF45J20**	2	**CFONF45J19**	1	236 (107)
	32.3	4.3	**CFONF56A20**	2	**CFONF56A19**	1	240 (109)
Applications: Medium Weight Oils, Heat Transfer Oils, Lube Oils, Liquid Paraffin							
15 W/in²③	4.0	4.1	**CFONF13G29**	1			125 (57)
Steel Tank	5.0	4.1	**CFONF16A29**	1			128 (58)
6-Incoloy®	6.0	4.1	**CFONF18G29**	1			130 (59)
(2.3 W/cm²)	8.0	4.1	**CFONF22R29**	1	**CFONF22R30**	1	133 (61)
	10.0	4.2	**CFONF27R29**	1	**CFONF27R30**	1	168 (77)
	12.0	4.2	**CFONF32R29**	1	**CFONF32R30**	1	170 (78)
	16.0	4.3	**CFONF42G29**	1	**CFONF42G30**	1	236 (107)
	20.0	4.3	**CFONF51R29**	1	**CFONF51R30**	1	240 (109)
Applications: Bunker C and #6 Fuel Oils, Asphalt							
8 W/in²③	2.5	4.1	**CFONF16J22**	1			128 (58)
Steel Tank	3.25	4.1	**CFONF19J22**	1			130 (59)
6-Incoloy®	4.25	4.1	**CFONF24J22**	1	**CFONF24J21**	1	133 (61)
(1.3 W/cm²)	5.25	4.2	**CFONF30A22**	1	**CFONF30A21**	1	168 (77)
	6.38	4.2	**CFONF35A22**	1	**CFONF35A21**	1	170 (77)
	8.5	4.3	**CFONF45J22**	1	**CFONF45J21**	1	236 (107)
	10.75	4.3	**CFONF56A22**	1	**CFONF56A21**	1	240 (109)

All circulation heaters are Assembly Stock unless otherwise noted.

Availability

Assembly Stock: Five to seven working days

Standard: 10 working days

Truck Shipment only

③ Must be operated 3-phase wye only.

④ Wired for higher voltage.

Tubular and Process Assemblies

Circulation Heaters

5"Flange

Fig. No.	A Dimension in	(mm)	B Dimension in	(mm)	E Dimension in	(mm)
5.1	49 3/16	(1249)	30	(762)	14 7/8	(378)
5.2	56 3/16	(1427)	37	(940)	18 9/16	(471)
5.3	67 11/16	(1719)	48 1/2	(1232)	24 15/16	(633)
5.4	81 1/16	(2059)	61 7/8	(1572)	30 7/8	(784)
5.5	94 1/16	(2389)	74 7/8	(1902)	37 15/16	(964)

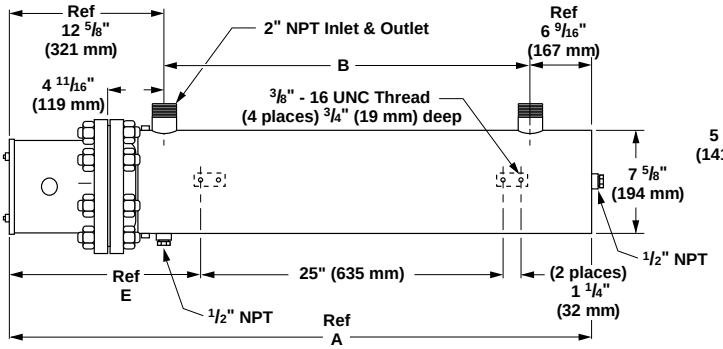

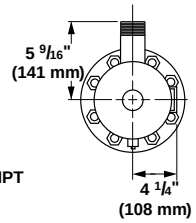

5" 150 lb ANSI Flange—WATROD Element

WATROD Description	kW	Fig. No.	Code No. 240V~(ac) 1-Phase	No. of Circuits	240V~(ac) 3-Phase	No. of Circuits	480V~(ac) 1-Phase	No. of Circuits	480V~(ac) 3-Phase	No. of Circuits	Est. Ship. Weight lbs	(kg)
Application: Clean Water												
60 W/in²	24	5.1	**CFNC727A10**	3	**CFNC727A3**	2	**CFNC727A11**	3	**CFNC727A5**	1	140	(64)
Steel Tank	30	5.1			**CFNC732J3**	2	**CFNC732J11**	2	**CFNC732J5**	1	142	(65)
6-Copper	36	5.2			**CFNC738A3**	2	**CFNC738A11**	2	**CFNC738A5**	1	160	(73)
(9.3 W/cm²)	50	5.3							**CFNC751A5**	2	180	(82)
	60	5.4							**CFNC760J5②**	2	190	(87)
60 W/in²	36	5.1			**CFNC727A3X**	3	**CFNC727A11X**	3	**CFNC727A5X**	1	145	(66)
Steel Tank	45	5.1			**CFNC732J3X**	3	**CFNC732J11X**	3	**CFNC732J5X**	3	147	(67)
9-Copper	54	5.2			**CFNC738A3X**	3	**CFNC738A11X**	3	**CFNC738A5X**	3	166	(76)
(9.3 W/cm²)	75	5.3							**CFNC751A5X**	3	188	(86)
	90	5.4							**CFNC760J5X②**	3	200	(91)
Application: Process Water												
48 W/in²⑤	24	5.1	**CFNN733A10**	3	**CFNN733A3**	2	**CFNN733A11**	3	**CFNN733A5**	1	145	(66)
Steel Tank	30	5.2			**CFNN740J3**	2	**CFNN740J11**	2	**CFNN740J5**	1	167	(76)
6-Incoloy®	36	5.3			**CFNN748A3**	2	**CFNN748A11**	2	**CFNN748A5**	1	180	(82)
(7.5 W/cm²)												
48 W/in²	36	5.1			**CFNN733A3X**	3	**CFNN733A11X**	3	**CFNN733A5X**	1	150	(68)
Steel Tank	45	5.2			**CFNN740J3X**	3	**CFNN740J11X**	3	**CFNN740J5X**	3	173	(79)
9-Incoloy®	54	5.3			**CFNN748A3X**	3	**CFNN748A11X**	3	**CFNN748A5X**	3	188	(86)
(7.5 W/cm²)												

CONTINUED

All circulation heaters are Assembly Stock unless otherwise noted.
Availability
Assembly Stock: Five to seven working days
Standard: 10 working days
Truck Shipment only

② Standard
⑤ 240V~(ac) can be wired wye and operated at 480V~(ac) 3-phase to produce ⅓ more kW and watt density.

Tubular and Process Assemblies

Circulation Heaters

5" 150 lb ANSI Flange—WATROD Element

WATROD Description	kW	Fig. No.	Code No. 240V~(ac) 1-Phase	No. of Circuits	240V~(ac) 3-Phase	No. of Circuits	480V~(ac) 1-Phase	No. of Circuits	480V~(ac) 3-Phase	No. of Circuits	Est. Ship. Weight lbs (kg)
Applications: Forced Air and Gases, Caustic Solutions, Degreasing Solutions											
23 W/in²⑤⑥	9	5.1	**CFNNA25J10**	1	**CFNNA25J3**	1	**CFNNA25J11**	1	**CFNNA25J5**	1	140 (64)
Steel Tank	12	5.2	**CFNNA33A10**	2	**CFNNA33A3**	1	**CFNNA33A11**	1	**CFNNA33A5**	1	145 (66)
6-Incoloy®	15	5.2	**CFNNA40J10**	2	**CFNNA40J3**	1	**CFNNA40J11**	1	**CFNNA40J5**	1	167 (76)
(3.6 W/cm²)	18	5.3	**CFNNA48A10**	2	**CFNNA48A3**	1	**CFNNA48A11**	1	**CFNNA48A5**	1	180 (82)
	25	5.4			**CFNNA64J3**	2	**CFNNA64J11**	2	**CFNNA64J5**	1	195 (89)
	30	5.5			**CFNNA77A3**	2	**CFNNA77A11**	2	**CFNNA77A5**	1	220 (100)
23 W/in²	14	5.1	**CFNNA25J10X**	3	**CFNNA25J3X**	1	**CFNNA25J11X**	1	**CFNNA25J5X**	1	140 (66)
Steel Tank	18	5.2	**CFNNA33A10X**	3	**CFNNA33A3X**	1	**CFNNA33A11X**	1	**CFNNA33A5X**	1	145 (68)
9-Incoloy®	23	5.2	**CFNNA40J10X**	3	**CFNNA40J3X**	3	**CFNNA40J11X**	1	**CFNNA40J5X**	1	167 (79)
(3.6 W/cm²)	27	5.3	**CFNNA48A10X**	3	**CFNNA48A3X**	3	**CFNNA48A11X**	3	**CFNNA48A5X**	1	180 (86)
	38	5.4			**CFNNA64J3X**	3	**CFNNA64J11X**	3	**CFNNA64J5X**	1	195 (94)
	45	5.5			**CFNNA77A3X**	3	**CFNNA77A11X**	3	**CFNNA77A5X**	3	220 (106)
Applications: Lightweight Oils, Degreasing Solutions, Heat Transfer Oils											
23 W/in²	12	5.2	**CFNS733A10**	2	**CFNS733A3**	1	**CFNS733A11**	1	**CFNS733A5**	1	145 (66)
Steel Tank	15	5.2	**CFNS740J10**	2	**CFNS740J3**	1	**CFNS740J11**	1	**CFNS740J5**	1	167 (76)
6-Steel	18	5.3	**CFNS748A10**	2	**CFNS748A3**	3	**CFNS748A11**	1	**CFNS748A5**	1	180 (82)
(3.6 W/cm²)	25	5.4			**CFNS764J3**	2	**CFNS764J11**	2	**CFNS764J5**	1	195 (89)
	30	5.5			**CFNS777A3**	2	**CFNS777A11**	2	**CFNS777A5**	1	220 (100)
23 W/in²	18	5.2	**CFNS733A10X**	3	**CFNS733A3X**	1	**CFNS733A11X**	1	**CFNS733A5X**	1	150 (68)
Steel Tank	23	5.2	**CFNS740J10X**	3	**CFNS740J3X**	3	**CFNS740J11X**	1	**CFNS740J5X**	1	173 (79)
9-Steel	27	5.3	**CFNS748A10X**	3	**CFNS748A3X**	1	**CFNS748A11X**	3	**CFNS748A5X**	1	188 (86)
(3.6 W/cm²)	38	5.4			**CFNS764J3X**	3	**CFNS764J11X**	3	**CFNS764J5X**	1	206 (94)
	45	5.5			**CFNS777A3X**	3	**CFNS777A11X**	3	**CFNS777A5X**	3	233 (106)
Applications: Medium Weight Oils, Heat Transfer Oils, Liquid Paraffin											
16 W/in²③	8	5.1			**CFNN733A12**	1			**CFNN733A13**	1	145 (66)
Steel Tank	10	5.2			**CFNN740J12**	1			**CFNN740J13**	1	167 (76)
6-Incoloy®	12	5.3			**CFNN748A12**	1			**CFNN748A13**	1	180 (82)
(2.6 W/cm²)											
16 W/in²③	12	5.1			**CFNN733A12X**	1			**CFNN733A13X**	1	150 (68)
Steel Tank	15	5.2			**CFNN740J12X**	1			**CFNN740J13X**	1	173 (79)
9-Incoloy®	18	5.3			**CFNN748A12X**	1			**CFNN748A13X**	1	188 (86)
(2.6 W/cm²)											
Applications: Bunker C and #6 Fuel Oils											
8 W/in²③	5	5.2			**CFNS740J12**	1			**CFNS740J13**	1	167 (76)
Steel Tank	6	5.3			**CFNS748A12**	1			**CFNS748A13**	1	180 (82)
6-Steel	8	5.4			**CFNS764J12**	1			**CFNS764J13**	1	195 (89)
(1.3 W/cm²)	10	5.5			**CFNS777A12**	1			**CFNS777A13**	1	220 (100)
8 W/in²③	7.5	5.2			**CFNS740J12X**	1			**CFNS740J13X**	1	173 (79)
Steel Tank	9	5.3			**CFNS748A12X**	1			**CFNS748A13X**	1	188 (86)
9-Steel	12	5.4			**CFNS764J12X**	1			**CFNS764J13X**	1	206 (94)
(1.3 W/cm²)	15	5.5			**CFNS777A12X**	1			**CFNS777A13X**	1	233 (106)

All circulation heaters are Assembly Stock unless otherwise noted.
Availability
Assembly Stock: Five to seven working days
Standard: 10 working days
Truck Shipment only

③ Must be operated 3-phase wye only.
⑤ 240V~(ac) can be wired wye and operated at 480V~(ac) 3-phase to produce ⅓ more kW and watt density.
⑥ Can be wired wye to produce ⅓ of the original kW and watt density (3-phase only).

Tubular and Process Assemblies

Circulation Heaters

6" Flange

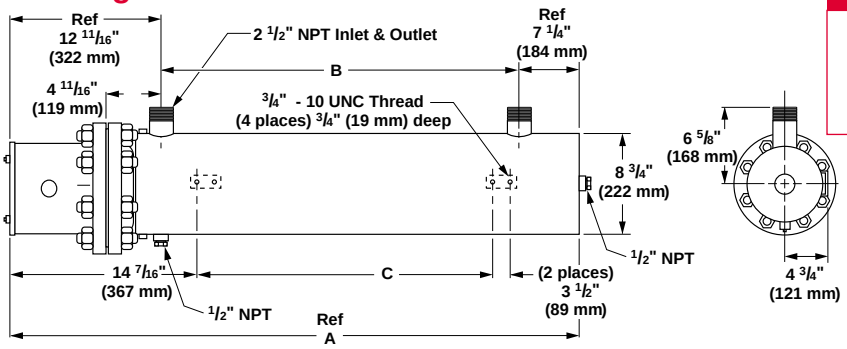

Fig. No.	A Dimension in	(mm)	B Dimension in	(mm)	C Dimension in	(mm)
6.1	40 7/16	(1027)	20 1/2	(521)	17	(432)
6.2	50 15/16	(1294)	31	(787)	27 1/2	(699)
6.3	71 15/16	(1827)	52	(1321)	48 1/2	(1232)
6.4	92 15/16	(2361)	73	(1854)	66	(1676)

6" 150 lb ANSI Flange—WATROD Element

WATROD Description	kW	Fig. No.	Code No. 240V~(ac) 1-Phase	No. of Circuits	240V~(ac) 3-Phase	No. of Circuits	480V~(ac) 1-Phase	No. of Circuits	480V~(ac) 3-Phase	No. of Circuits	Est. Ship. Weight lbs	(kg)
Application: Clean Water												
60 W/in²	24	6.1	**CFPC715G10**	3	**CFPC715G3**	2	**CFPC715G11**	2	**CFPC715G5**	1	212	(97)
Steel Tank	36	6.1	**CFPC721G10**	4	**CFPC721G3**	2	**CFPC721G11**	2	**CFPC721G5**	1	217	(99)
12-Copper	48	6.2			**CFPC726R3**	4	**CFPC726R11**	3	**CFPC726R5**	2	222	(101)
(9.3 W/cm²)	60	6.2			**CFPC732G3**	4	**CFPC732G11**	3	**CFPC732G5**	2	226	(103)
	72	6.3			**CFPC737R3**	4			**CFPC737R5**	2	290	(132)
	100	6.3							**CFPC750R5**	4	298	(136)
	120	6.4							**CFPC760G5**	4	360	(164)
60 W/in²	30	6.1	**CFPC715G10X**	3	**CFPC715G3X**	5	**CFPC715G11X**	3	**CFPC715G5X**	1	215	(98)
Steel Tank	45	6.1	**CFPC721G10X**	5	**CFPC721G3X**	5	**CFPC721G11X**	3	**CFPC721G5X**	5	223	(102)
15-Copper	60	6.2			**CFPC726R3X**	5	**CFPC726R11X**	3	**CFPC726R5X**	5	226	(103)
(9.3 W/cm²)	75	6.2			**CFPC732G3X**	5	**CFPC732G11X**	5	**CFPC732G5X**	5	288	(131)
	90	6.3			**CFPC737R3X**	5			**CFPC737R5X**	5	296	(134)
	125	6.3							**CFPC750R5X**	5	306	(139)
	150	6.4							**CFPC760G5X**②	5	370	(168)
Application: Deionized Water, Demineralized Water												
60 W/in²	24	6.1	**CFPR715N10**	3	**CFPR715N3**	2	**CFPR715N11**	2	**CFPR715N5**	1	212	(97)
316 SS Tank	36	6.1	**CFPR721N10**	4	**CFPR721N3**	2	**CFPR721N11**	3	**CFPR721N5**	1	217	(99)
12-316 SS	48	6.2			**CFPR727E3**	4	**CFPR727E11**	3	**CFPR727E5**	2	222	(101)
(9.3 W/cm²)	60	6.2			**CFPR732N3**	4	**CFPR732N11**	3	**CFPR732N5**	2	226	(103)
Passivated	72	6.3			**CFPR738E3**	4			**CFPR738E5**	2	290	(132)
	100	6.3							**CFPR751E5**	4	298	(136)
	120	6.4							**CFPR760N5**	4	360	(164)
60 W/in²	30	6.1	**CFPR715N10X**	3	**CFPR715N3X**	5	**CFPR715N11X**	3	**CFPR715N5X**	1	215	(98)
316 SS Tank	45	6.1	**CFPR721N10X**	5	**CFPR721N3X**	5	**CFPR721N11X**	3	**CFPR721N5X**	5	223	(102)
15-316 SS	60	6.2			**CFPR727E3X**	5	**CFPR727E11X**	3	**CFPR727E5X**	5	226	(103)
(9.3 W/cm²)	75	6.2			**CFPR732N3X**	5	**CFPR732N11X**	5	**CFPR732N5X**	5	288	(131)
Passivated	90	6.3			**CFPR738E3X**	5			**CFPR738E5X**	5	296	(135)
	125	6.3							**CFPR751E5X**	5	306	(139)
	150	6.4							**CFPR760N5X**	5	370	(168)

CONTINUED

All circulation heaters are Assembly Stock unless otherwise noted.

② Standard

Availability

Assembly Stock: Five to seven working days

Standard: 10 working days

Truck Shipment only

Tubular and Process Assemblies

Circulation Heaters

6" 150 lb ANSI Flange—WATROD Element

WATROD Description	kW	Fig. No.	Code No. 240V~(ac) 1-Phase	No. of Circuits	240V~(ac) 3-Phase	No. of Circuits	480V~(ac) 1-Phase	No. of Circuits	480V~(ac) 3-Phase	No. of Circuits	Est. Ship. Weight lbs (kg)
Application: Process Water											
48 W/in²⑤	18	6.1	**CFPN713G10**	2	**CFPN713G3**	1	**CFPN713G11**	1	**CFPN713G5**	1	212 (97)
Steel Tank	24	6.1	**CFPN717R10**	3	**CFPN717R3**	2	**CFPN717R11**	2	**CFPN717R5**	1	214 (97)
12-Incoloy®	30	6.1	**CFPN720G10**	3	**CFPN720G3**	2	**CFPN720G11**	2	**CFPN720G5**	1	217 (99)
(7.5 W/cm²)	36	6.1	**CFPN725G10**	4	**CFPN725G3**	2	**CFPN725G11**	2	**CFPN725G5**	1	222 (101)
	48	6.2			**CFPN732R3**	4	**CFPN732R11**	3	**CFPN732R5**	2	226 (103)
	60	6.3			**CFPN740G3**	4	**CFPN740G11**	3	**CFPN740G5**	2	290 (132)
	72	6.3			**CFPN747R3**	4			**CFPN747R5**	2	298 (136)
48 W/in²	23	6.1	**CFPN713G10X**	3	**CFPN713G3X**	5	**CFPN713G11X**	1	**CFPN713G5X**	1	215 (98)
Steel Tank	30	6.1	**CFPN717R10X**	3	**CFPN717R3X**	5	**CFPN717R11X**	3	**CFPN717R5X**	1	217 (99)
15-Incoloy®	38	6.1	**CFPN720G10X**	5	**CFPN720G3X**	5	**CFPN720G11X**	3	**CFPN720G5X**	1	223 (102)
(7.5 W/cm²)	45	6.1	**CFPN725G10X**	5	**CFPN725G3X**	5	**CFPN725G11X**	3	**CFPN725G5X**	5	226 (103)
	60	6.2			**CFPN732R3X**	5	**CFPN732R11X**	3	**CFPN732R5X**	5	288 (131)
	75	6.3			**CFPN740G3X**	5	**CFPN740G11X**	5	**CFPN740G5X**	5	296 (135)
	90	6.3			**CFPN747R3X**	5			**CFPN747R5X**	5	306 (139)
Applications: Forced Air and Gases, Caustic Solutions, Degreasing Solutions											
23 W/in²⑤⑥	12	6.1	**CFPNA17R10**	2	**CFPNA17R3**	1	**CFPNA17R11**	1	**CFPNA17R5**	1	214 (97)
Steel Tank	18	6.1	**CFPNA25G10**	2	**CFPNA25G3**	1	**CFPNA25G11**	1	**CFPNA25G5**	1	222 (101)
12-Incoloy®	24	6.2	**CFPNA32R10**	3	**CFPNA32R3**	2	**CFPNA32R11**	2	**CFPNA32R5**	1	226 (103)
(3.6 W/cm²)	30	6.3	**CFPNA40G10**	3	**CFPNA40G3**	2	**CFPNA40G11**	2	**CFPNA40G5**	1	290 (132)
	36	6.3	**CFPNA47R10**	4	**CFPNA47R3**	2	**CFPNA47R11**	2	**CFPNA47R5**	1	298 (136)
	50	6.4			**CFPNA64G3**	4	**CFPNA64G11**	3	**CFPNA64G5**	2	360 (164)
	60	6.4			**CFPNA76R3**	4	**CFPNA76R11**	3	**CFPNA76R5**	2	368 (167)
23 W/in²	15	6.1	**CFPNA17R10X**	3	**CFPNA17R3X**	1	**CFPNA17R11X**	1	**CFPNA17R5X**	1	217 (99)
Steel Tank	23	6.1	**CFPNA25G10X**	3	**CFPNA25G3X**	5	**CFPNA25G11X**	1	**CFPNA25G5X**	1	226 (103)
15-Incoloy®	30	6.2	**CFPNA32R10X**	3	**CFPNA32R3X**	5	**CFPNA32R11X**	3	**CFPNA32R5X**	1	288 (131)
(3.6 W/cm²)	38	6.3	**CFPNA40G10X**	5	**CFPNA40G3X**	5	**CFPNA40G11X**	3	**CFPNA40G5X**	1	296 (135)
	45	6.3	**CFPNA47R10X**	5	**CFPNA47R3X**	5	**CFPNA47R11X**	3	**CFPNA47R5X**	5	306 (139)
	63	6.4			**CFPNA64G3X**	5	**CFPNA64G11X**	3	**CFPNA64G5X**	5	370 (168)
	75	6.4			**CFPNA76R3X**	5	**CFPNA76R11X**	5	**CFPNA76R5X**	5	381 (173)

CONTINUED

All circulation heaters are Assembly Stock unless otherwise noted.
Availability
Assembly Stock: Five to seven working days
Standard: 10 working days
Truck Shipment only

⑤ 240V~(ac) can be wired wye and operated at 480V~(ac) 3-phase to produce ⅓ more kW and watt density.
⑥ Can be wired wye to produce ⅓ of the original kW and watt density (3-phase only).

Tubular and Process Assemblies

Circulation Heaters

6" 150 lb ANSI Flange—WATROD Element

WATROD Description	kW	Fig. No.	Code No. 240V~(ac) 1-Phase	No. of Circuits	240V~(ac) 3-Phase	No. of Circuits	480V~(ac) 1-Phase	No. of Circuits	480V~(ac) 3-Phase	No. of Circuits	Est. Ship. Weight lbs (kg)
Applications: Lightweight Oils, Degreasing Solutions, Heat Transfer Oils											
23 W/in²	12	6.1	**CFPS717R10**	2	**CFPS717R3**	1	**CFPS717R11**	1	**CFPS717R5**	1	214 (97)
Steel Tank	18	6.1	**CFPS725G10**	2	**CFPS725G3**	1	**CFPS725G11**	1	**CFPS725G5**	1	222 (101)
12-Steel	24	6.2	**CFPS732R10**	3	**CFPS732R3**	2	**CFPS732R11**	2	**CFPS732R5**	1	226 (103)
(3.6 W/cm²)	30	6.3	**CFPS740G10**	3	**CFPS740G3**	2	**CFPS740G11**	2	**CFPS740G5**	1	290 (132)
	36	6.3	**CFPS747R10**	4	**CFPS747R3**	2	**CFPS747R11**	2	**CFPS747R5**	1	298 (136)
	50	6.4			**CFPS764G3**	4	**CFPS764G11**	3	**CFPS764G5**	2	360 (164)
	60	6.4			**CFPS776R3**	4	**CFPS776R11**	3	**CFPS776R5**	2	368 (167)
23 W/in²	15	6.1	**CFPS717R10X**	3	**CFPS717R3X**	1	**CFPS717R11X**	1	**CFPS717R5X**	1	217 (99)
Steel Tank	23	6.1	**CFPS725G10X**	3	**CFPS725G3X**	5	**CFPS725G11X**	1	**CFPS725G5X**	1	226 (103)
15-Steel	30	6.2	**CFPS732R10X**	3	**CFPS732R3X**	5	**CFPS732R11X**	3	**CFPS732R5X**	1	288 (131)
(3.6 W/cm²)	38	6.3	**CFPS740G10X**	5	**CFPS740G3X**	5	**CFPS740G11X**	3	**CFPS740G5X**	1	296 (135)
	45	6.3	**CFPS747R10X**	5	**CFPS747R3X**	5	**CFPS747R11X**	3	**CFPS747R5X**	5	306 (139)
	63	6.4			**CFPS764G3X**	5	**CFPS764G11X**	3	**CFPS764G5X**	5	370 (168)
	75	6.4			**CFPS776R3X**	5	**CFPS776R11X**	5	**CFPS776R5X**	5	381 (173)
Applications: Medium Weight Oils, Heat Transfer Oils, Liquid Paraffin											
16 W/in²③	6	6.1			**CFPN713G12**	1			**CFPN713G13**	1	212 (97)
Steel Tank	8	6.1			**CFPN717R12**	1			**CFPN717R13**	1	214 (97)
12-Incoloy®	10	6.1			**CFPN720G12**	1			**CFPN720G13**	1	217 (99)
(2.6 W/cm²)	12	6.1			**CFPN725G12**	1			**CFPN725G13**	1	222 (101)
	16	6.2			**CFPN732R12**	1			**CFPN732R13**	1	226 (103)
	20	6.3			**CFPN740G12**	2			**CFPN740G13**	1	290 (132)
	24	6.3			**CFPN747R12**	2			**CFPN747R13**	1	298 (136)
16 W/in²③	7.5	6.1			**CFPN713G12X**	1			**CFPN713G13X**	1	215 (98)
Steel Tank	10	6.1			**CFPN717R12X**	1			**CFPN717R13X**	1	217 (99)
15-Incoloy®	12.5	6.1			**CFPN720G12X**	1			**CFPN720G13X**	1	223 (102)
(2.6 W/cm²)	15	6.1			**CFPN725G12X**	1			**CFPN725G13X**	1	226 (103)
	20	6.2			**CFPN732R12X**	5			**CFPN732R13X**	1	288 (131)
	25	6.3			**CFPN740G12X**	5			**CFPN740G13X**	1	296 (135)
	30	6.3			**CFPN747R12X**	5			**CFPN747R13X**	1	306 (139)
Applications: Bunker C and #6 Fuel Oils											
8 W/in²③	8	6.2			**CFPS732R12**	1			**CFPS732R13**	1	226 (103)
Steel Tank	10	6.3			**CFPS740G12**	1			**CFPS740G13**	1	290 (132)
12-Steel	12	6.3			**CFPS747R12**	1			**CFPS747R13**	1	298 (136)
(1.3 W/cm²)	16.5	6.4			**CFPS764G12**	1			**CFPS764G13**	1	360 (164)
	20	6.4							**CFPS776R13**	1	368 (167)
8 W/in²③	10	6.2			**CFPS732R12X**	1			**CFPS732R13X**		288 (131)
Steel Tank	12.5	6.3			**CFPS740G12X**	1			**CFPS740G13X**	1	296 (135)
15-Steel	15	6.3			**CFPS747R12X**	1			**CFPS747R13X**	1	306 (139)
(1.3 W/cm²)	21	6.4			**CFPS764G12X**	5			**CFPS764G13X**	1	370 (168)
	25	6.4			**CFPS776R12X**	5			**CFPS776R13X**	1	381 (173)

All circulation heaters are Assembly Stock unless otherwise noted.

Availability

Assembly Stock: Five to seven working days

Standard: 10 working days

Truck Shipment only

③ Must be operated 3-phase wye only.

Tubular and Process Assemblies

Circulation Heaters

6" 150 lb ANSI Flange—FIREBAR Element

FIREBAR Description	kW	Fig. No.	Code No. 240V~(ac) 3-Phase	No. of Circuits	480V~(ac) 3-Phase	No. of Circuits	Est. Ship. Weight lbs (kg)
Applications: Process Water, Ethylene Glycol (50%)							
45 W/in²	30	6.1	**CFPNF13G27**	5			217 (99)
Steel Tank	37.5	6.1	**CFPNF16A27**	5			220 (100)
15-Incoloy®	45	6.1	**CFPNF18G27**	5			223 (102)
(7 W/cm²)	60	6.1	**CFPNF22R27**	5	**CFPNF22R28**	5	226 (103)
	75	6.2	**CFPNF27R27**	5	**CFPNF27R28**	5	232 (106)
	90	6.2	**CFPNF32R27**	5	**CFPNF32R28**	5	236 (107)
	120	6.3			**CFPNF42G28**	5	304 (138)
	150	6.3			**CFPNF51R28**	5	314 (143)
Applications: Cooking Oils, Ethylene Glycol (100%)							
30 W/in²③	25	6.1	**CFPNF16J12**	5	**CFPNF16J13**	5	220 (100)
Steel Tank	32	6.1	**CFPNF19J12**	5	**CFPNF19J13**	5	223 (102)
15-Incoloy®	42	6.1	**CFPNF24J12**	5	**CFPNF24J13**	5	226 (103)
(4.7 W/cm²)	52	6.2	**CFPNF30A12**	5	**CFPNF30A13**	5	232 (106)
	64	6.2	**CFPNF35A12**	5	**CFPNF35A13**	5	236 (107)
	85	6.3	**CFPNF45J12**	5	**CFPNF45J13**	5	304 (138)
	110	6.3			**CFPNF56A13**	5	314 (143)
Applications: Heat Transfer Oils, Mineral Oil, Degreasing Solutions							
23 W/in²④	19	6.1	**CFPNF16J20**	5			220 (100)
Steel Tank	24	6.1	**CFPNF19J20**	5			223 (102)
15-Incoloy®	32	6.1	**CFPNF24J20**	5	**CFPNF24J19**	5	226 (103)
(3.6 W/cm²)	40	6.2	**CFPNF30A20**	5	**CFPNF30A19**	5	232 (106)
	48	6.2	**CFPNF35A20**	5	**CFPNF35A19**	5	236 (107)
	64	6.3	**CFPNF45J20**	5	**CFPNF45J19**	5	304 (138)
	80	6.3	**CFPNF56A20**	5	**CFPNF56A19**	5	314 (143)
Applications: Medium Weight Oils, Heat Transfer Oils, Lube Oils, Liquid Paraffin							
15 W/in²③	10	6.1	**CFPNF13G29**	5			217 (99)
Steel Tank	12.5	6.1	**CFPNF16A29**	5			220 (100)
15-Incoloy®	15	6.1	**CFPNF18G29**	5			223 (102)
(2.3 W/cm²)	20	6.1	**CFPNF22R29**	5	**CFPNF22R30**	5	226 (103)
	25	6.2	**CFPNF27R29**	5	**CFPNF27R30**	5	232 (106)
	30	6.2	**CFPNF32R29**	5	**CFPNF32R30**	5	236 (107)
	40	6.3	**CFPNF42G29**	5	**CFPNF42G30**	5	304 (138)
	50	6.3	**CFPNF51R29**	5	**CFPNF51R30**	5	314 (143)
Applications: Bunker C and #6 Fuel Oils, Asphalt							
8 W/in²③	6.3	6.1	**CFPNF16J22**	5			220 (100)
Steel Tank	8.1	6.1	**CFPNF19J22**	5			223 (102)
15-Incoloy®	10.6	6.1	**CFPNF24J22**	5	**CFPNF24J21**	5	226 (103)
(1.3 W/cm²)	13.1	6.2	**CFPNF30A22**	5	**CFPNF30A21**	5	232 (106)
	16	6.2	**CFPNF35A22**	5	**CFPNF35A21**	5	236 (107)
	21.3	6.3	**CFPNF45J22**	5	**CFPNF45J21**	5	304 (138)
	26	6.3	**CFPNF56A22**	5	**CFPNF56A21**	5	314 (143)

All circulation heaters are Assembly Stock unless otherwise noted.

Availability

Assembly Stock: Five to seven working days

Truck Shipment only

③ Must be operated 3-phase wye only.

④ Wired for higher voltage.

Tubular and Process Assemblies

Circulation Heaters

8" Flange

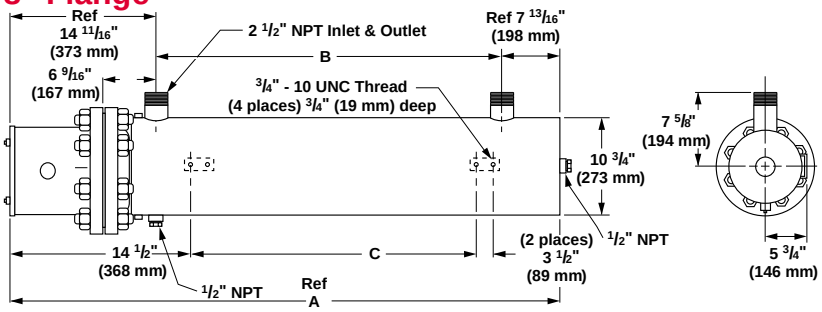

Fig. No.	A Dimension in	(mm)	B Dimension in	(mm)	C Dimension in	(mm)
7.1	47 3/16	(1199)	24 11/16	(627)	21 3/16	(538)
7.2	55 3/16	(1402)	32 11/16	(830)	29 3/16	(741)
7.3	62 3/16	(1580)	39 11/16	(1008)	36 3/16	(919)
7.4	69 13/16	(1773)	47 5/16	(1202)	43 13/16	(1113)
7.5	79 5/16	(2014)	56 13/16	(1443)	53 5/16	(1354)
7.6	88 5/16	(2243)	65 13/16	(1672)	62 5/16	(1583)
7.7	98 5/16	(2497)	75 13/16	(1926)	72 5/16	(1837)

8" 150 lb ANSI Flange— WATROD Element

WATROD Description	kW	Fig. No.	Code No. 240V~(ac) 1-Phase	No. of Circuits	240V~(ac) 3-Phase	No. of Circuits	480V~(ac) 1-Phase	No. of Circuits	480V~(ac) 3-Phase	No. of Circuits	Est. Ship. Weight lbs (kg)
Application: Clean Water											
60 W/in²	50	7.1			**CFRC721N3②**	3	**CFRC721N11**	3	**CFRC721N5**	2	340 (155)
Steel Tank	75	7.2			**CFRC729N3②**	6			**CFRC729N5②**	2	360 (164)
18-Copper	100	7.3			**CFRC737E3②**	6			**CFRC737E5**	3	385 (175)
(9.3 W/cm²)	125	7.4			**CFRC745E3②**	6			**CFRC745E5②**	3	410 (186)
	150	7.5							**CFRC752N5②**	6	440 (200)
	175	7.6							**CFRC760N5②**	6	465 (211)
	200	7.7							**CFRC768E5②**	6	510 (232)
Application: Process Water											
48 W/in²⑤	50	7.2			**CFRN725N3②**	3	**CFRN725N11②**	3	**CFRN725N5②**	2	350 (159)
Steel Tank	75	7.3			**CFRN735N3②**	6			**CFRN735N5②**	2	380 (173)
18-Incoloy®	100	7.4			**CFRN744E3**	6			**CFRN744E5**	3	410 (186)
(7.5 W/cm²)	125	7.5			**CFRN754M3②**	6			**CFRN754M5②**	6	445 (202)
	150	7.6							**CFRN763M5②**	6	490 (223)
	175	7.7							**CFRN773D5**	6	530 (241)
	200	7.7							**CFRN782M5②**	6	560 (254)
48 W/in²	67	7.2			**CFRN726D3X②**	4	**CFRN726D11X②**	3	**CFRN726D5X②**	2	358 (163)
Steel Tank	100	7.3			**CFRN736D3X②**	8			**CFRN736D5X②**	4	392 (178)
24-Incoloy®	133	7.4			**CFRN744M3X②**	8			**CFRN744M5X②**	4	425 (193)
(7.5 W/cm²)	167	7.5			**CFRN754M3X②**	8			**CFRN754M5X②**	8	463 (210)
	200	7.6							**CFRN763M5X②**	8	511 (232)
	233	7.7							**CFRN773D5X**	8	554 (252)
	267	7.7							**CFRN782M5X②**	8	587 (267)
Applications: Forced Air and Gases, Caustic Solutions, Degreasing Solutions											
23 W/in²⑤⑥	30	7.2	**CFRNA32N10②**	3	**CFRNA32N3②**	2	**CFRNA32N11②**	2	**CFRNA32N5②**	1	370 (168)
Steel Tank	40	7.3			**CFRNA43E3②**	3	**CFRNA43E11②**	2	**CFRNA43E5②**	2	410 (186)
18-Incoloy®	50	7.4			**CFRNA51M3②**	3	**CFRNA51M11**	3	**CFRNA51M5**	2	440 (200)
(3.6 W/cm²)											
23 W/in²	40	7.2	**CFRNA33D10X②**	4	**CFRNA33D3X②**	4	**CFRNA33D11X②**	2	**CFRNA33D5X②**	2	382 (174)
Steel Tank	53	7.3			**CFRNA43M3X②**	4	**CFRNA43M11X②**	3	**CFRNA43M5X②**	2	425 (193)
24-Incoloy®	67	7.4			**CFRNA51M3X②**	4	**CFRNA51M11X②**	3	**CFRNA51M5X②**	2	457 (207)
(3.6 W/cm²)											

CONTINUED

All circulation heaters are Assembly Stock unless otherwise noted.
Availability
Assembly Stock: Five to seven working days
Standard: 10 working days
Truck Shipment only

② Standard
⑤ 240V~(ac) can be wired wye and operated at 480V~(ac) 3-phase to produce ⅓ more kW and watt density.
⑥ Can be wired wye to produce ⅓ of the original kW and watt density (3-phase only).

Tubular and Process Assemblies

Circulation Heaters

8" 150 lb ANSI Flange—WATROD Element

WATROD Description	kW	Fig. No.	Code No. 240V~(ac) 1-Phase	No. of Circuits	240V~(ac) 3-Phase	No. of Circuits	480V~(ac) 1-Phase	No. of Circuits	480V~(ac) 3-Phase	No. of Circuits	Est. Ship. Weight lbs (kg)
Applications: Lightweight Oils, Degreasing Solutions, Heat Transfer Oils											
23 W/in²	30.0	7.2	**CFRS732N10②**	3	**CFRS732N3②**	2	**CFRS732N11②**	2	**CFRS732N5②**	1	370 (168)
Steel Tank	40.0	7.3			**CFRS743E3②**	3	**CFRS743E11②**	2	**CFRS743E5**	2	410 (186)
18-Steel	50.0	7.4			**CFRS751M3**	3	**CFRS751M11**	3	**CFRS751M5**	2	440 (200)
(3.6 W/cm²)	60.0	7.5			**CFRS762D3②**	6	**CFRS762D11②**	3	**CFRS762D5②**	2	480 (218)
	70.0	7.6			**CFRS770M3②**	6	**CFRS770M11**	6	**CFRS770M5**	2	530 (241)
	80.0	7.7			**CFRS779M3②**	6			**CFRS779M5②**	3	610 (277)
23 W/in²	40.0	7.2	**CFRS733D10X②**	4	**CFRS733D3X②**	4	**CFRS733D11X②**	2	**CFRS733D5X②**	2	382 (174)
Steel Tank	53.0	7.3			**CFRS743M3X②**	4	**CFRS743M11X②**	3	**CFRS743M5X②**	2	425 (193)
24-Steel	67.0	7.4			**CFRS751M3X②**	4	**CFRS751M11X②**	3	**CFRS751M5X②**	2	457 (208)
(3.6 W/cm²)	80.0	7.5			**CFRS762D3X②**	8	**CFRS762D11X②**	4	**CFRS762D5X②**	4	461 (209)
	93.0	7.6			**CFRS770M3X②**	8	**CFRS770M11X②**	6	**CFRS770M5X②**	4	554 (252)
	107.0	7.7			**CFRS779M3X②**	8			**CFRS779M5X②**	4	636 (289)
Applications: Medium Weight Oils, Heat Transfer Oils, Liquid Paraffin											
16 W/in²③	17.0	7.2			**CFRN725N12②**	1			**CFRN725N13②**	1	350 (159)
Steel Tank	25.0	7.3			**CFRN735N12②**	2			**CFRN735N13②**	1	380 (173)
18-Incoloy®	33.0	7.4			**CFRN744E12②**	2			**CFRN744E13**	1	410 (186)
(2.6 W/cm²)	42.0	7.5			**CFRN754M12②**	3			**CFRN754M13②**	2	445 (202)
	50.0	7.6							**CFRN763M13②**	2	490 (223)
	58.0	7.7							**CFRN773D13**	2	530 (241)
	67.0	7.7							**CFRN782M13②**	2	560 (254)
16 W/in²	23.0	7.2			**CFRN726D12X②**	2			**CFRN726D13X②**	1	358 (163)
Steel Tank	33.0	7.3			**CFRN736D12X②**	2			**CFRN736D13X②**	1	392 (178)
24-Incoloy®	44.0	7.4			**CFRN744M12X②**	4			**CFRN744M13X②**	2	425 (193)
(2.6 W/cm²)	56.0	7.5			**CFRN754M12X②**	4			**CFRN754M13X②**	2	463 (210)
	67.0	7.6							**CFRN763M13X②**	2	511 (232)
	77.0	7.7							**CFRN773D13X②**	2	554 (252)
	89.0	7.7							**CFRN782M13X②**	4	587 (267)
Applications: Bunker C and #6 Fuel Oils											
8 W/in²③	12.5	7.3			**CFRS743E12②**	1			**CFRS743E13②**	1	410 (186)
Steel Tank	16.5	7.4			**CFRS751M12**	1			**CFRS751M13**	1	440 (200)
18-Steel	20.0	7.5			**CFRS762D12②**	2			**CFRS762D13②**	1	480 (218)
(1.3 W/cm²)	24.0	7.6			**CFRS770M12**	2			**CFRS770M13**	1	530 (241)
	27.0	7.7			**CFRS779M12②**	2			**CFRS779M13②**	1	610 (277)
8 W/in²③	17.0	7.3			**CFRS743M12X②**	1			**CFRS743M13X②**	1	425 (193)
Steel Tank	22.0	7.4			**CFRS751M12X②**	2			**CFRS751M13X②**	1	457 (208)
24-Steel	27.0	7.5			**CFRS762D12X②**	2			**CFRS762D13X②**	1	461 (209)
(1.3 W/cm²)	32.0	7.6			**CFRS770M12X②**	2			**CFRS770M13X②**	1	554 (252)
	36.0	7.7			**CFRS779M12X②**	2			**CFRS779M13X②**	1	636 (289)

All circulation heaters are Assembly Stock unless otherwise noted.

Availability

Assembly Stock: Five to seven working days

Standard: 10 working days

Truck Shipment only

② Standard

③ Must be operated 3-phase wye only.

Tubular and Process Assemblies

Circulation Heaters

10" Flange

Fig. No.	A Dimension in	A Dimension (mm)	B Dimension in	B Dimension (mm)	C Dimension in	C Dimension (mm)
8.1	76 9/16	(1945)	60 13/16	(1545)	67 9/16	(1716)
8.2	84 1/16	(2135)	68 5/16	(1735)	75 1/16	(1907)
8.3	91 3/16	(2316)	75 7/16	(1916)	82 3/16	(2088)
8.4	99 1/16	(2516)	83 5/16	(2116)	90 1/16	(2288)
8.5	106 9/16	(2707)	90 13/16	(2307)	97 9/16	(2478)

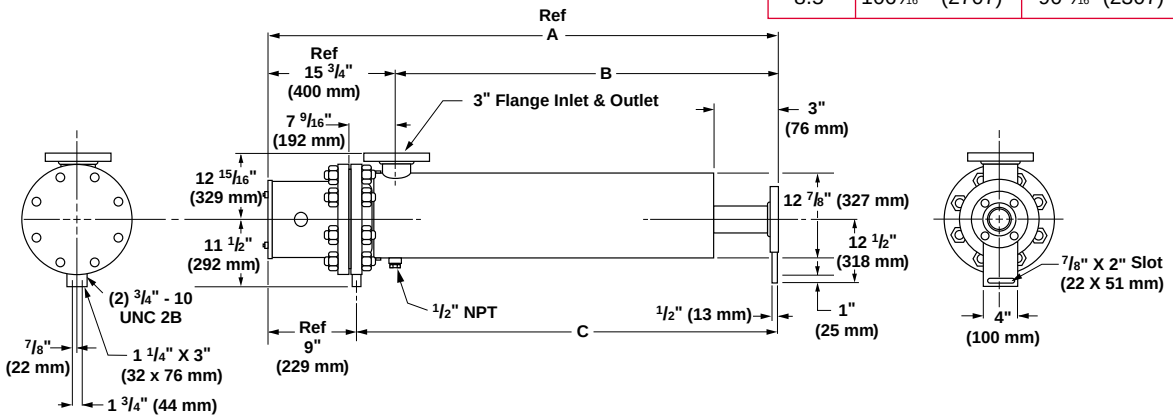

10" 150 lb ANSI Flange—WATROD Element

WATROD Description	kW	Fig. No.	Code No. 240V~(ac) 3-Phase	No. of Circuits	Code No. 480V~(ac) 3-Phase	No. of Circuits	Est. Ship. Weight lbs	(kg)
Application: Process Water								
48 W/in²⑤	262	8.5			**CFSN773E5**	9	600	(273)
Steel Tank								
27-Incoloy®								
(7.5 W/cm²)								
Applications: Forced Air and Gases, Caustic Solutions, Degreasing Solutions								
23 W/in²⑤⑥	60	8.1	**CFSNA43N3②**	3	**CFSNA43N5②**	3	515	(234)
Steel Tank	75	8.2	**CFSNA51N3②**	9	**CFSNA51N5**	3	530	(241)
27-Incoloy®								
(3.6 W/cm²)								
Applications: Lightweight Oils, Degreasing Solutions, Heat Transfer Oils								
23 W/in²	90	8.3			**CFSS762E5②**	3	540	(245)
Steel Tank	105	8.4			**CFSS770N5**	3	600	(272)
27-Steel	120	8.5			**CFSS778N5②**	3	645	(293)
(3.6 W/cm²)								
Applications: Medium Weight Oils, Heat Transfer Oils, Liquid Paraffin								
16 W/in²③	75	8.3			**CFSN763N13②**	3	540	(245)
Steel Tank	87	8.5			**CFSN773E13②**	3	600	(273)
27-Incoloy®								
(2.6 W/cm²)								
Applications: Bunker C and #6 Fuel Oils								
8 W/in²③	30	8.3	**CFSS762E12②**	3	**CFSS762E13②**	1	540	(245)
Steel Tank	35	8.4	**CFSS770N12**	3	**CFSS770N13**	1	600	(273)
27-Steel	40	8.5	**CFSS778N12②**	3	**CFSS778N13②**	1	645	(293)
(1.3 W/cm²)								

All circulation heaters are Assembly Stock unless otherwise noted.

Availability

Assembly Stock: Five to seven working days

Standard: 10 working days

Truck Shipment only

② Standard

③ Must be operated 3-phase wye only.

⑤ 240V~(ac) can be wired wye and operated at 480V~(ac) 3-phase to produce ⅓ more kW and watt density.

⑥ Can be wired wye to produce ⅓ of the original kW and watt density (3-phase only).

Tubular and Process Assemblies

Circulation Heaters

12" Flange

Fig. No.	A Dimension in	(mm)	B Dimension in	(mm)	C Dimension in	(mm)
9.1	76 7/8	(1953)	60 11/16	(1541)	67 13/16	(1722)
9.2	84 3/8	(2143)	68 3/16	(1732)	75 5/16	(1913)
9.3	91 7/8	(2334)	75 11/16	(1922)	82 13/16	(2103)
9.4	99	(2515)	82 13/16	(2103)	89 15/16	(2284)
9.5	106 1/2	(2705)	90 5/16	(2294)	97 7/16	(2475)

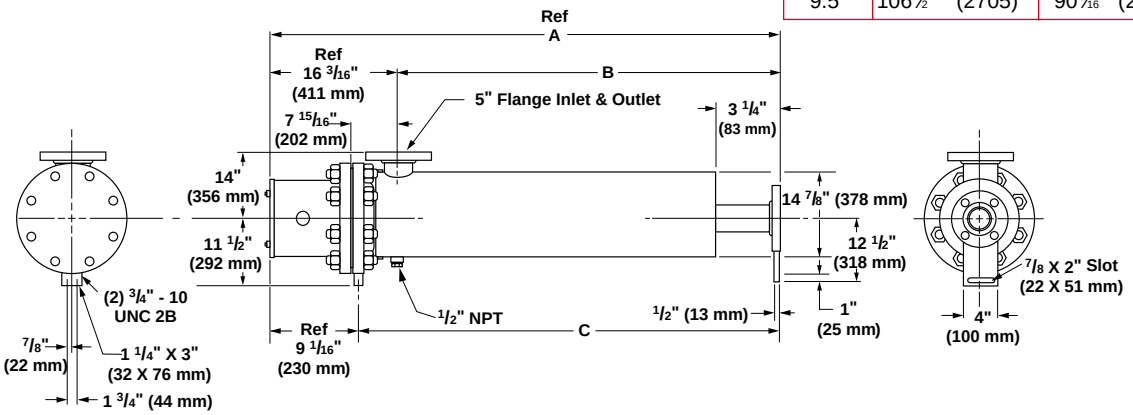

12" 150 lb ANSI Flange—WATROD Element

WATROD Description	kW	Fig. No.	Code No. 240V~(ac) 3-Phase	No. of Circuits	Code No. 480V~(ac) 3-Phase	No. of Circuits	Est. Ship. Weight lbs	(kg)
Application: Process Water								
48 W/in²	350	9.5			**CFTN773C5**	12	650	(295)
Steel Tank								
36-Incoloy®								
(7.5 W/in²)								
Applications: Forced Air and Gases, Caustic Solutions, Degreasing Solutions								
23 W/in²	80	9.1			**CFTNA43L5②**	3	565	(257)
Steel Tank	100	9.2			**CFTNA51L5**	3	585	(266)
36-Incoloy®								
(3.6 W/cm²)								
Applications: Lightweight Oils, Degreasing Solutions, Heat Transfer Oils								
23 W/in²	140	9.4			**CFTS770L5**	4	650	(295)
Steel Tank	160	9.5			**CFTS778L5②**	4	700	(318)
36-Steel								
(3.6 W/cm²)								
Applications: Medium Weight Oils, Heat Transfer Oils, Liquid Paraffin								
16 W/in²③	117	9.5			**CFTN773C13②**	3	650	(295)
Steel Tank								
36-Incoloy®								
(2.6 W/cm²)								
Applications: Bunker C and #6 Fuel Oils								
8 W/in²③	47	9.4	**CFTS770L12②**	3	**CFTS770L13**	2	700	(318)
Steel Tank	54	9.5	**CFTS778L12②**	3	**CFTS778L13②**	2	750	(341)
36-Steel								
(1.3 W/cm²)								

All circulation heaters are Assembly Stock unless otherwise noted.

Availability

Assembly Stock: Five to seven working days

Standard: 10 working days

Truck Shipment only

② Standard

③ Must be operated 3-phase wye only.

Tubular and Process Assemblies

Circulation Heaters

14" Flange

Fig. No.	A Dimension in	(mm)	B Dimension in	(mm)	C Dimension in	(mm)
10.1	75¾	(1924)	59 7/16	(1510)	66½	(1689)
10.2	83¼	(2115)	66 15/16	(1700)	74	(1880)
10.3	90¾	(2305)	74 7/16	(1891)	81½	(2070)
10.4	98¼	(2496)	81 15/16	(2081)	89	(2261)
10.5	105¾	(2686)	89 7/16	(2272)	96½	(2451)

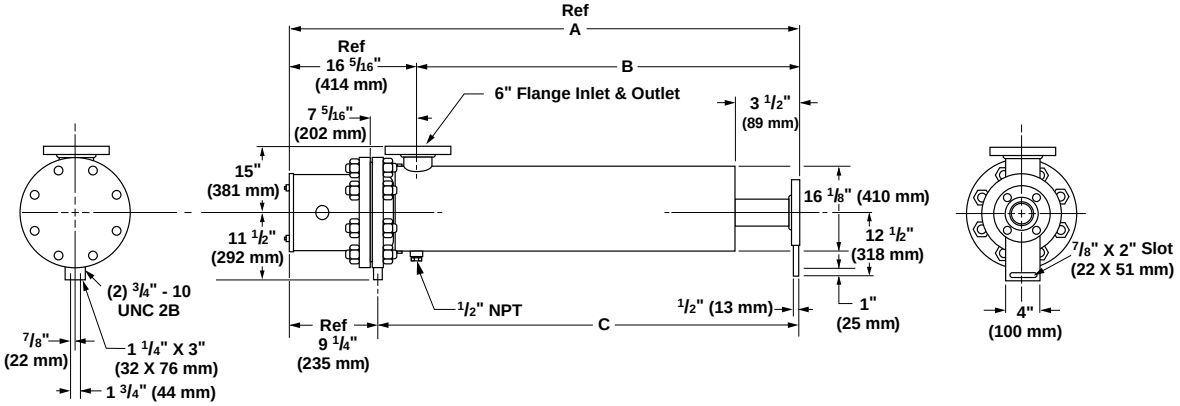

14" 150 lb ANSI Flange—WATROD Element

WATROD Description	kW	Fig. No.	Code No. 240V~(ac) 3-Phase	No. of Circuits	Code No. 480V~(ac) 3-Phase	No. of Circuits	Est. Ship. Weight lbs	(kg)
Application: Process Water								
48 W/in²	315	10.2			**CFWN754J5②**	15	600	(273)
Steel Tank	375	10.3			**CFWN763J5②**	15	650	(295)
45-Incoloy®								
(7.5 W/cm²)								
Applications: Forced Air and Gases, Caustic Solutions, Degreasing Solutions								
23 W/in²	100	10.1			**CFWNA43J5②**	3	570	(259)
Steel Tank	125	10.2			**CFWNA51J5**	5	590	(268)
45-Incoloy®								
(3.6 W/cm²)								
Applications: Lightweight Oils, Degreasing Solutions, Heat Transfer Oils								
23 W/in²	150	10.3			**CFWS762A5②**	5	650	(295)
Steel Tank	175	10.4			**CFWS770J5**	5	700	(318)
45-Steel	200	10.5			**CFWS778J5②**	5	780	(354)
(3.6 W/cm²)								
Applications: Medium Weight Oils, Heat Transfer Oils, Liquid Paraffin								
16 W/in²③	105	10.2			**CFWN754J13②**	3	600	(273)
Steel Tank	125	10.3			**CFWN763J13②**	5	650	(295)
45-Incoloy®								
(2.6 W/cm²)								
Applications: Bunker C and #6 Fuel Oils								
8 W/in²③	60	10.4	**CFWS770J12②**	3	**CFWS770J13**	3	700	(318)
Steel Tank	67	10.5	**CFWS778J12②**	5	**CFWS778J13②**	3	780	(354)
45-Steel								
(1.3 W/cm²)								

All circulation heaters are Assembly Stock unless otherwise noted.
Availability
Assembly Stock: Five to seven working days
Standard: 10 working days
Truck Shipment only

② Standard
③ Must be operated 3-phase wye only.

Tubular and Process Assemblies

F.O.B.: Hannibal, Missouri

Circulation Heaters

Build-a-Code

_____ - _____ - _____

Circulation Heater Base Code Number

General purpose (NEMA 1) terminal enclosure standard

Optional Terminal Enclosure Type

S = General purpose with thermostat (NEMA 1)
W = Moisture resistant (NEMA 4)
E = Explosion resistant (NEMA 7)
E/W = Explosion/moisture resistant (NEMA 7/4)

Optional Thermostat① or Thermocouple②

① Thermostat code numbers shown on page 425. Check sensing bulb O.D. against thermowell I.D. to assure proper fit. For side-mount thermostats, also assure adequate capillary tube length.

② Specify Type J or K thermocouple. If overtemp thermocouple specify orientation horizontal, vertical up or vertical down.

How to Order

To order a stock circulation heater, please specify:

- Watlow code number
- Volts/watts
- Phase
- Flange or screw plug size
- Tank material
- Options
- Quantity

If the circulation heater is to be configured with options, add the suffix letter(s) to the circulation heater base code number, as indicated on the Build-a-Code chart.

If stock units do not meet your application needs, Watlow can provide **made-to-order** heaters. Please provide:

- Application (including vessel orientation)
- Volts/watts
- Phase
- Number of circuits
- Watt density
- Sheath material and number of heating elements
- Flange or screw plug size
- Tank material
- Inlet and outlet mating type and size
- Centerline of inlet and outlet
- Terminal enclosure type
- Options
- Quantity

Availability

Assembly Stock: Five to seven working days

Modified Stock②: Five-10 working days

Standard: 10 working days

Made-to-Order: Six to eight weeks

Options, complexity and quantity may affect availability and lead times. Consult factory.

Replacement Heater Assemblies Only

Replacement heater assemblies available by ordering circulation heater code number and specifying "*replacement heater only*."

② Assembly Stock units with catalog options.

Circulation Heaters

Booster Heaters

Booster Heaters

Booster heaters are ideal for circulating applications requiring less kilowatts, including engine preheating.

Booster heaters are made from a steel or brass 1¼" NPT screw plug heater and insulated pressure vessel with 1" FNPT inlet and outlet. This assembly also contains an integral thermostat.

Performance Capabilities

- Watt densities to 60 W/in^2 (9.3 W/cm^2)
- Wattages to 3kW
- Voltages to 480V~(ac)
- Steel sheath temperatures to 750°F (400°C)
- Copper sheath temperatures to 350°F (175°C)

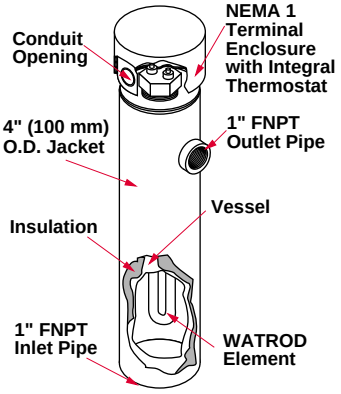

Features and Benefits

- **Dual voltages** simplify stocking and wiring.
- **Carbon steel**, **standard pipe wall vessel** is compatible with many applications.
- **One inch thick (25 mm) fiber-glass thermal insulation**, rated to 750°F (400°C), reduces heat loss.
- **Steel jacket (shroud)** is fully welded and painted to protect thermal insulation.
- **Inlet and outlet nozzle connections** are one inch FNPT fittings welded to the vessel.
- **General purpose (NEMA 1) terminal enclosure** protects terminals and thermostat.
- **Integral thermostat controls** process temperatures from:

  60° to 160°F (15° to 70°C) on copper sheath elements

  175° to 550°F (80° to 290°C) on steel sheath elements

Applications

- Stand by generators
- Peak power trimming generators
- Mobile generator sets
- Earth-moving equipment
- Water heaters
- Lightweight oils

Options

Terminal Enclosure

General purpose (NEMA 1) terminal enclosures with integral thermostats are supplied on all Watlow booster heaters. Optional moisture resistant (NEMA 4) terminal enclosures protect wiring and thermostat from liquid contaminants. To order, add the suffix letter **W** to the booster heater base code number.

For explosion resistant (NEMA 7) and explosion/moisture resistant (NEMA 7/4) terminal enclosures, see ***Screw Plug Immersion Heaters,*** **pages 322 to 324**.

Tubular and Process Assemblies

F.O.B.: Hannibal, Missouri

Circulation Heaters

Booster Heaters

Description	kW	Phase	Code No. 120/240V~(ac)	Est. Ship. Weight lbs	(kg)
Application: Aqueous Solutions					
60 W/in²	1.5	1	**CBEC8G6**	18	(8.2)
Brass Plug	2.0	1	**CBEC10F6**	18	(8.2)
2-Copper	2.5	1	**CBEC12F6**	18	(8.2)
(9.3 W/cm²)	3.0	1	**CBEC15A6X**	18	(8.2)
Application: Lightweight Oils					
23 W/in²	0.5	1	**CBES7G6**	18	(8.2)
Steel Plug	0.75	1	**CBES10B6**	18	(8.2)
2- Steel	1.0	1	**CBES12P6**	18	(8.2)
(3.6 W/cm²)					

All units are Assembly Stock

For optional housing adders use circulation heater adders.

Availability

Assembly Stock: Five to seven days

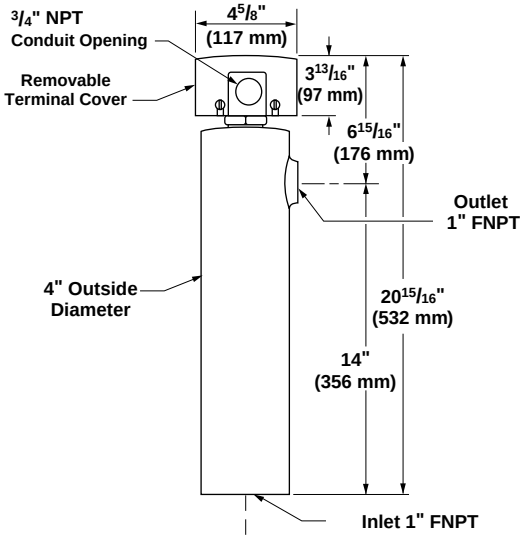

How to Order

To order a booster heater, please specify:

- Watlow code number
- Volts/watts
- Options
- Quantity

If the booster heater requires an optional NEMA 4 terminal enclosure, add the suffix letter **W** to the base code number.

If our Assembly Stock units do not meet your application needs, Watlow can provide a made-to-order unit. For **made-to-order** units, consult your Watlow representative and provide the following information:

- Application
- Volts/watts
- Watt density
- Phase
- Terminal enclosure type
- Options
- Quantity

Availability

Assembly Stock: Five to seven working days

Modified Stock①: Five to seven working days

Made-to-Order: Six to eight weeks

Options, complexity and quantity may affect availability and lead times. Consult factory.

① Assembly Stock units with catalog options.

Circulation Heaters

Engine Preheaters

Watlow engine preheaters help maintain a desired minimum engine temperature to make starting fast and easy. Also reduces engine wear caused by cold engine starting.

Engine preheaters mount conveniently on an engine or rail. The internal thermostat constantly adjusts to ambient temperature changes to keep engine coolant warm at all times.

An internal tank temperature sensor protects Watlow engine preheaters from dry fire conditions caused by low coolant levels or blocked flow.

Installation is easy with just two mounting bolts, and inlet and outlet hose connections.

Performance Capabilities

- Watt densities from 45 to 90 W/in^2 (7 to 14 W/cm^2)
- Up to 6 kW
- UL® and CSA component recognition to 480V~(ac) and 600V~(ac) respectively.
- Thermostatically controlled from 60 to 160°F (15 to 70°C)
- Incoloy® sheath temperatures to 1600°F (870°C)

Features and Benefits

- **Incoloy® sheath** minimizes the risk of premature failure in the event of a dry-fire condition.
- **Integral, prewired adjustable thermostat**, mounted in a general purpose (NEMA 1) terminal enclosure provides a ready-to-install unit.
- **Easy installation with standard, one inch (25 mm) diameter beaded inlet and outlet nozzles**. Rubber hose connections eliminate the need for threaded fittings and adapters.
- **120/240V~(ac) or 240/480V~(ac) dual voltages** make field wiring flexible. Minimizes stocking multiple voltages.
- **Mounting bracket** isolates harmful engine vibration.
- **Heavy-duty welded carbon steel tank** resists corrosion and extends life.
- **Optional oil pressure interconnect switch** disrupts power during engine operation.

- **Integral check valve** assures proper coolant flow and correct thermostat operation. Check valve will not interfere with adequate thermo-siphoning.
- **UL® and CSA component** recognition under file numbers E52951 and 31388 respectively. See **pages 268 to 271** for details.

Applications

- Standby generators
- Primary power generators
- Firepump engines

Options

Terminal Enclosures

The following terminal enclosures are available:

- Standard, general purpose (NEMA 1)
- Moisture resistant (NEMA 4)
- Explosion resistant (NEMA 7) class 1, groups C and D. For class 1, group B enclosures, consult your Watlow representative.

Order by adding the suffix letter **W** (NEMA 4) or **E** (NEMA 7) to the engine preheater base code number.

Threaded Nozzles

Carbon steel threaded inlets and outlets are available for installations using rigid piping or threaded adapters. Threaded nozzles are typically supplied for firepump applications. To order, specify **threaded nozzles** and **NPT size**.

Tubular and Process Assemblies

F.O.B.: Hannibal, Missouri

Circulation Heaters

Engine Preheaters

Application Hints

- Mount engine preheaters in horizontal position only (as shown in Figures #1, #2 and #3). Consult your Watlow representative if vertical mounting is unavoidable.
- Mount the heater near or below the lowest point on the engine block. Keep outlet nozzle pointed up, as indicated on the tank.
- Estimate kilowatt requirements with the following formula. First determine the engine displacement, then multiply:

English
Cubic inches X 3 = estimated wattage
Metric
Liters X 183 = estimated wattage

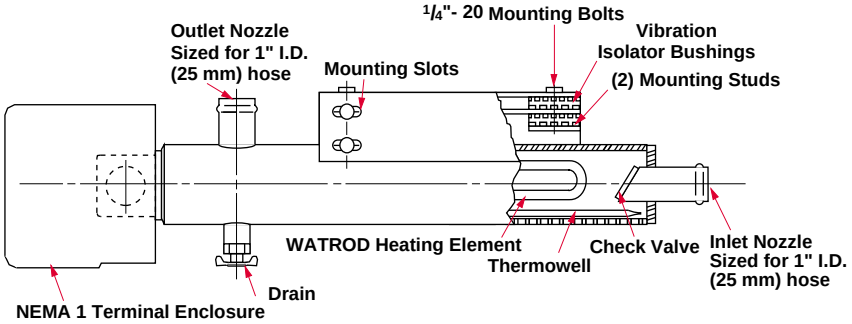

Figure 1

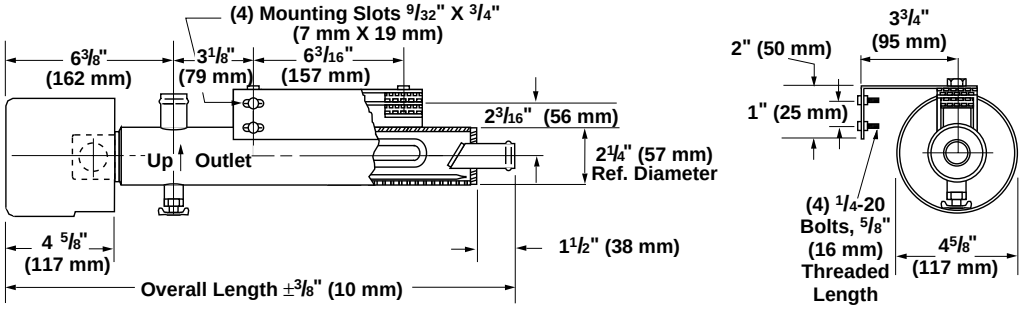

kW	Overall Length Inch	(mm)	Code No. 120/240V~(ac) 1-Phase	208V~(ac) 1-Phase	240/480V~(ac) 1-Phase	Est. Ship. Weight lbs	(kg)
Application: Ethylene Glycol/Engine Coolant							
1.13	20⅞	(530)		**CPBPL2S12**①		12	(6)
1.50	20⅞	(530)	**CPBPB6S12**	**CPBPB2S12**①		12	(6)
1.69	20⅞	(530)		**CPBPM2S12**①		12	(6)
1.88	20⅞	(530)		**CPBPN2S12**①		12	(6)
2.00	20⅞	(530)	**CPBPC6S12**			12	(6)
2.25	20⅞	(530)	**CPBPD6S12**			12	(6)
2.25	26 11/16	(678)		**CPBPD2S12**①		15	(7)
2.50	20⅞	(530)	**CPBPE6S12**			12	(6)
3.00	26 11/16	(678)		**CPBPF2S12**①	**CPBPF7S12**	15	(7)
3.75	26 11/16	(678)		**CPBPG2S12**①		15	(7)
4.00	26 11/16	(678)			**CPBPH7S12**	15	(7)
5.00	26 11/16	(678)			**CPBPJ7S12**①	15	(7)

All preheaters are Stock unless otherwise noted.
Availability
Stock: Same day shipment
Standard: Four weeks

① Standard

F.O.B.: Hannibal, Missouri

Circulation Heaters

Engine Preheaters

Figure 2

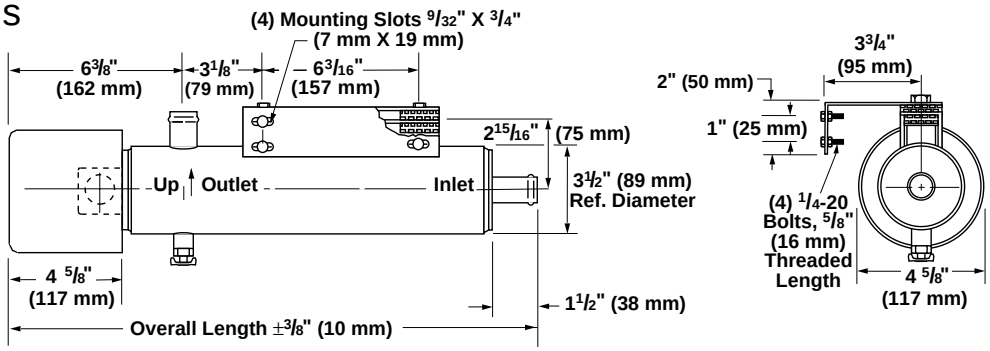

kW	Overall Length Inch	(mm)	Code No. 277V~(ac) 1-Phase	Code No. 480V~(ac) 3-Phase	Est. Ship. Weight lbs	(kg)
Application: Ethylene Glycol/Engine Coolant						
1.5	20⅞	(530)	**CPCPB4S12①**	**CPCPB13S12①**	12	(6)
2.0	20⅞	(530)	**CPCPC4S12①**	**CPCPC13S12①**	12	(6)
2.5	20⅞	(530)	**CPCPE4S12①**	**CPCPE13S12①**	12	(6)
3.75	20⅞	(530)	**CPCPG4S12①**	**CPCPG13S12①**	12	(6)
4.0	20⅞	(530)	**CPCPH4S12①**	**CPCPH13S12**	12	(6)
5.0	20⅞	(530)	**CPCPJ4S12①**	**CPCPJ13S12**	12	(6)

Figure 3

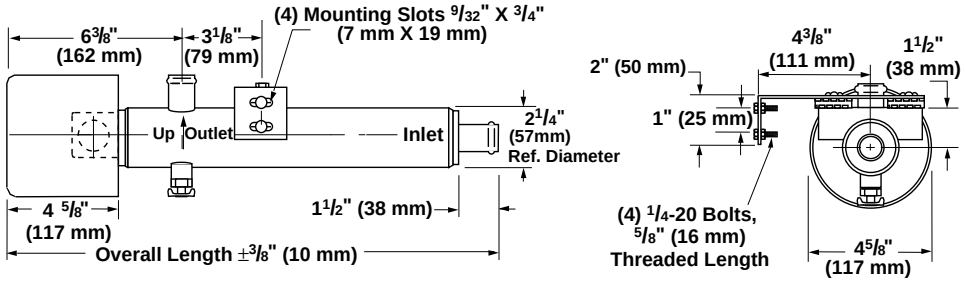

kW	Overall Length Inch	(mm)	Code No. 120/240V~(ac) 1-Phase	Code No. 208V~(ac) 1-Phase	Est. Ship. Weight lbs	(kg)
Application: Ethylene Glycol/Engine Coolant						
0.75	15⅝	(397)		**CPBPK2S12①**	9	(4)
1.0	15⅝	(397)	**CPBPA6S12①**		9	(4)

All preheaters are stock unless otherwise noted.

Availability

Stock: Same day shipment

Standard: Four weeks

① Standard

How to Order

To order a Stock, or Standard engine preheater, please specify:

- Code number
- Volts/watts
- Phase
- Options
- Quantity

If our Stock units do not meet your application needs, Watlow will provide a made-to-order unit. For **made-to-order** units, provide the following information:

- Volts/watts
- Phase
- Inlet and outlet type and size
- Terminal enclosure type
- Mounting orientation
- Options
- Quantity

Availability

Stock: Same day shipment

Modified Stock②: Five to seven working days

Standard: Four weeks

Made-to-Order: Six to eight weeks

Options, complexity and quantity may affect availability and lead times. Consult factory.

② Stock units with catalog options.

Tubular and Process Assemblies

Circulation Heaters

Pipe Insert Heaters

Pipe insert immersion heaters permit removing and servicing the heater bundle without draining the liquid being heated.

Heating is accomplished by mounting a flange or screw plug immersion heater inside a pressure-tight bayonet pipe vessel. The pipe vessel then mates to a flange connection on a storage tank's side. Heat transfer between element(s) and tank contents is accomplished by heating the air or heat transfer fluid inside the bayonet pipe for conduction to the tank's contents.

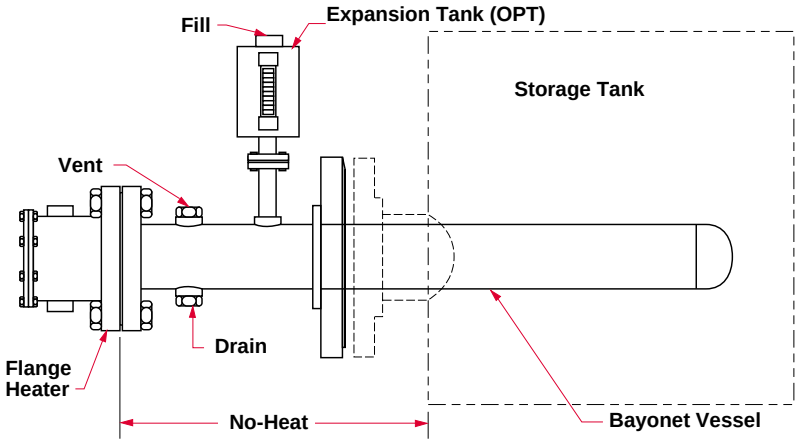

Performance Capabilities

- Wattages to 100kW
- Voltages to 600V~(ac)
- Ratings to 600 lb pressure class
- Incoloy® sheath temperatures to 1400°F (760°C)
- Stainless steel sheath temperatures to 1200°F (650°C)
- Steel sheath temperatures to 750°F (400°C)

Features and Benefits

- **Low watt density screw plug or flange heaters**, mounted in the bayonet vessel, provide long life.
- **Carbon steel, 304 and 316 stainless steel bayonet vessels** offer compatibility with a wide range of liquids.
- **Welded flange on pipe vessel** ensures pressure seal.
- **Heating element support(s)** ensure proper element spacing and maximum heater performance.
- **Heat transfer fluid fill/drain and vent couplings** ease installation and maintenance.

Applications

- Indirect heating of viscous fluids:
  - Asphalt
  - Tar
  - Molasses
  - Syrup
  - Glue
- Corrosive liquids
- Degreasing fluids

Options

Pipe insert heaters can be supplied with a variety of options, including:

- Appropriate gasket materials
- Passivation cleaning on pipe insert
- European screw plug to flange adapters
- CSA certified terminal enclosures
- Stand-off terminal enclosures
- Thermocouple temperature sensors
- Thermostats
- Customer specified materials, sizes and pressure class ratings

For descriptions and ordering information about these options, please refer to ***Flange Immersion Heaters***, **pages 340 to 343**, or ***Screw Plug Immersion Heaters***, **pages 322 to 326**.

Flanges

Flanges to 24 inches nominal pipe size are available in materials compatible with specific application needs. For information on flange materials and ratings, consult your Watlow representative.

Circulation Heaters

Pipe Insert Heaters

Bayonet Vessels

Bayonet vessels are available up to 14 inches nominal pipe size and 20 feet long. Vessel size is dependent upon the kW requirement and element watt density. For more information, please consult your Watlow representative.

Application Hints

- Mount pipe insert heater horizontally.
- Locate pipe insert heaters low in the tank, but above the sludge level.
- Consider a low liquid level sensor to protect against low liquid level conditions.
- Select the proper heat transfer media (air or fluid) to adequately conduct heat from the elements to the bayonet vessel. Consult your Watlow representative for recommendations.
- Select a watt density that's compatible with the heat transfer media being used.
- Use a sheath high-limit sensing device inside the bayonet vessel to protect against element over-heating.
- For pipe insert heater assemblies employing heat transfer fluid, use an expansion tank. This will allow for fluid expansion and contraction during heater cycling.
- Insulate the pipe insert heater's exterior to minimize heat loss.

Caution:
Do not insulate the terminal enclosure.

How to Order

All pipe insert heaters are **made-to-order**. To order, please specify:

- Application
- Volts/watts
- Phase
- Number of circuits
- Bayonet vessel material
- Storage tank mating flange size
- Maximum bayonet length beyond the storage tank mating flange
- Dimension from heater flange to inside of storage tank wall
- Terminal enclosure type
- Options
- Quantity

Availability

Made-to-Order: Six to eight weeks

Options, complexity and quantity may affect availability and lead times. Consult factory.

Tubular and Process Assemblies

Quick Ship

On stock chart units:
- *Five to seven days on all heaters*
- *10 working days on special voltages and/or wattages*
- *15 working days on special element lengths*

Over-the-Side Heaters

To provide portability, easy installation and removal, Watlow makes Over-the-Side heaters in three versions:

- "L" and "O" shaped
- Vertical loop
- Drum

These "installed-from-the-top" heaters slide easily into tanks, with the heated portion immersed along the side or at the bottom.

Over-the-Side heaters are ideal for heating water, oils, solvents, salts and acids. Application versatility is enhanced with optional sheath materials, kilowatt ratings, terminal enclosures and mounting methods.

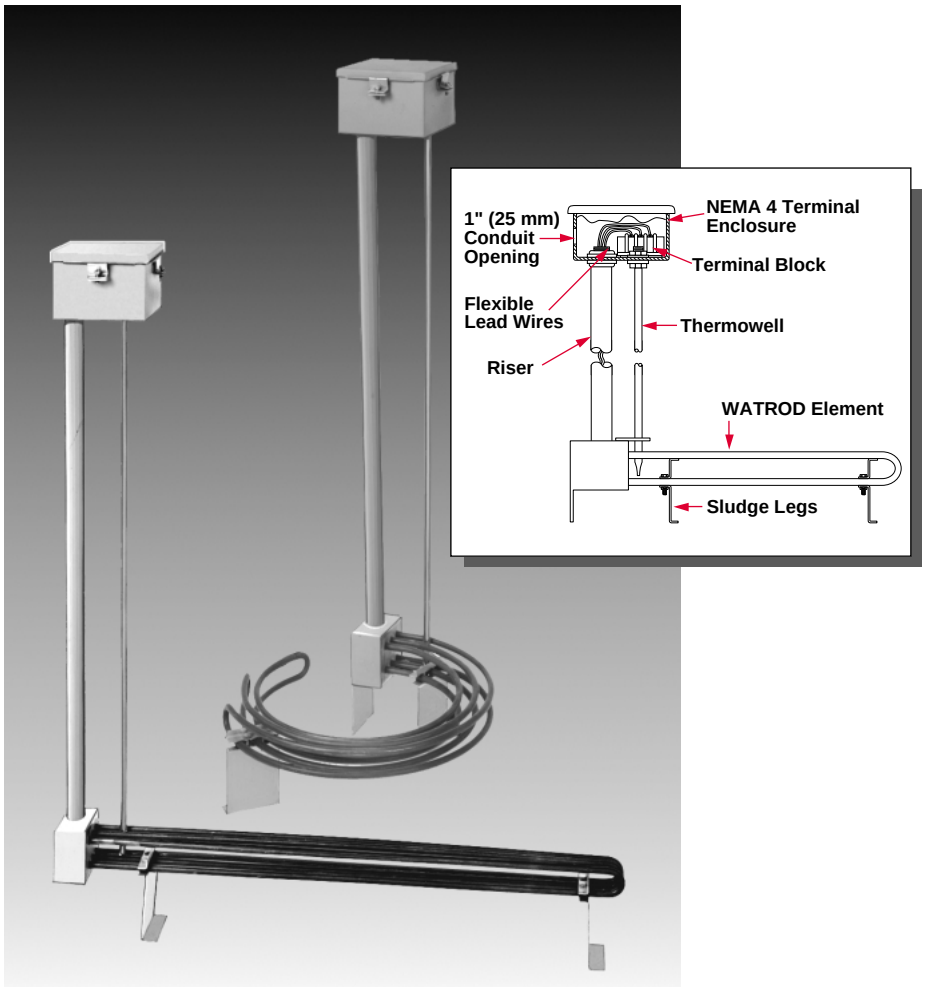

"L" and "O" Shaped Performance Capabilities

- Incoloy® sheath element watt densities to 60 W/in^2 (9.3 W/cm^2)
- Steel sheath element watt densities to 23 W/in^2 (3.6 W/cm^2)
- Wattages to 50kW
- Voltages to 600V~(ac)

Features and Benefits

- **Rugged, light-weight construction** resists damage during installation or removal.
- **Three 0.475 inch (12 mm) diameter WATROD heating elements** offer one- or three-phase operation.
- **WATROD hairpins are repressed (recompacted)** after bending to assure MgO density, dielectric strength, heat transfer and life.
- **Four inch (100 mm) sludge legs** keep heating elements off the tank's bottom to help avoid being covered with sediment.
- **RTV riser seal** prevents moisture from infiltrating electrical areas.
- **Standard size one inch conduit openings** facilitate wiring.
- **SRG insulated flexible lead wires**, rated to 390°F (200°C), allow factory or field wiring for three or one phase operation.
- **Riser materials are compatible with element sheath materials:**
  Stainless steel with Incoloy® sheath
  Steel with steel sheath
  All other wetted parts are stainless steel.
- **Integral thermowells** provide convenient temperature sensor insertion and replacement without draining the fluid being heated.
- **Moisture resistant (NEMA 4)** enclosures standard.
- **UL® and CSA component recognition** to 480V~(ac) and 600V~(ac) under file numbers E52951 and 31388 respectively.

Applications

- Water heating
- Freeze protection
- Viscous oils
- Storage tanks
- Degreasing tanks
- Solvents
- Salts
- Caustic solutions
- Paraffin

Over-the-Side Heaters

L and O Shaped

Options

Caution

Explosion-resistant terminal enclosures are intended to provide explosion containment in the electrical termination/wiring enclosure only. No portion of the assembly outside of this enclosure is covered under this rating. Rating effectiveness may be compromised by abuse or misapplication.

Terminal Enclosures

Moisture resistant (NEMA 4) terminal enclosures, without thermostats, are standard on all Watlow "L" and "O" shaped Over-the-Side heaters. Optional terminal enclosures meet application requirements with:

- Corrosion resistant (NEMA 4X). Available with or without a single or double pole thermostat.
- Explosion resistant (NEMA 7) class 1 groups C and D. Available with or without a single or double pole thermostat. For class 1, group B enclosures, consult your Watlow representative.
- Explosion/moisture resistant (NEMA 7/4) combinations. Available with or without a single or double pole thermostat.

Terminal enclosures without thermostats may be ordered by specifying the appropriate suffix code:

E for explosion resistant (NEMA 7)
E/W for explosion/moisture resistant (NEMA 7/4).

No suffix code is needed for corrosion resistant (NEMA 4X); simply specify terminal enclosure and rating.

To order a thermostat with a terminal enclosure, add the code number to the Over-the-Side heater base code number.

Thermostats

Optional single and double pole thermostats are also available separately.

For details on thermostats, see *Thermostats*, **pages 423 to 425**.

Thermocouples

ASTM Type J or K thermocouples offer more accurate sensing of process and/or sheath temperatures. A thermocouple may be inserted into the thermowell or attached to the heater's sheath.

Thermocouples are supplied with 120 inch (3050 mm) leads (longer lead lengths available). Unless otherwise specified, thermocouples are supplied with temperature ranges detailed on the *Thermocouple Types* chart.

Thermocouples require an appropriate temperature and power control. These must be purchased separately. Watlow offers a wide variety of temperature and power controls to meet virtually all applications. Temperature controls can be configured to accept process variable inputs, too. Consult your Watlow representative for details.

To order, specify **Type J** or **K** thermocouple, **lead length**, and indicate if it is for measuring **process** temperature or as a **high-limit** sensing device.

Thermocouple Types

ASTM Type	Conductor Characteristics Positive	Conductor Characteristics Negative	Recommended ① Temperature Range °F	Recommended ① Temperature Range (°C)
J	Iron (Magnetic)	Constantan (Non-magnetic)	0 to 1000	(-20 to 540)
K	Chromel® (Non-magnetic)	Alumel® (Magnetic)	0 to 2000	(-20 to 1100)

① Type J and Type K thermocouples are rated 32 to 1382°F and 32 to 2282°F (0-750°C and 0-1250°C), respectively. Watlow does not recommend exceeding temperature ranges shown on this chart for the tubular product line.

Alumel® and Chromel® are registered trademarks of the Hoskins Manufacturing Company.

Tubular and Process Assemblies

Over-the-Side Heaters

L and O Shaped

Options

Continued

Wattages and Voltages

Watlow routinely supplies Over-the-Side heaters with 240 to 480V~(ac) as well as wattages from three to 18 kilowatts. If required, Watlow can configure heaters with voltages and wattages outside these parameters.

For more information about this option, consult your Watlow representative.

Multiple Elements

Over-the-Side immersion heaters are configured with three WATROD heating elements.

To achieve a specific kilowatt rating, Watlow can configure units with up to 18 heating elements.

To order, specify **multiple elements**, the **number of elements**, **volts**, **watts**, **phase** and **maximum bundle height** and **width**.

Sheath Material

Stock “O” and “L” shaped Over-the-Side heaters come with Incoloy® or steel sheaths. 304 or 316 stainless steel and titanium sheaths are available upon request.

To order, specify the **sheath material**.

Passivation

During the manufacturing process, particles of iron or tool steel may become embedded in the stainless steel or alloy sheath. If not removed, these particles may corrode, produce rust spots and/or contaminate the process.

For critical applications, passivation will remove free iron from the sheath and other wetted surfaces.

To order, specify **passivation**.

Riser

A stainless steel or steel riser is supplied to keep terminal enclosures out of the heated solution. Stock heights are 39 5/16 or 51 5/16 inches (1000 or 1320 mm). Upon request, riser height up to 60 feet (18.3 m) can be provided.

To order, specify **riser material** and and **height**.

Right Angle Riser

Riser may be right angle formed to move the terminal enclosure away from over the tank.

To order, specify **right angle riser** and **dimensions**.

Sludge Legs

Four inch (100 mm) sludge legs are supplied on all stock units to keep elements above sediments. Shorter or longer sludge legs are available upon request.

To order, specify **sludge legs** and **height**.

Man Hole Cover

A man hole cover seals the tank and provides heater mounting.

Man hole covers are pre-assembled to the riser. Standard man hole covers are made from steel with other materials available upon request.

To order, specify **man hole construction**, **diameter** and **material**.

Tubular and Process Assemblies

F.O.B.: Hannibal, Missouri

Over-the-Side Heaters

L and O Shaped

"L" Shaped

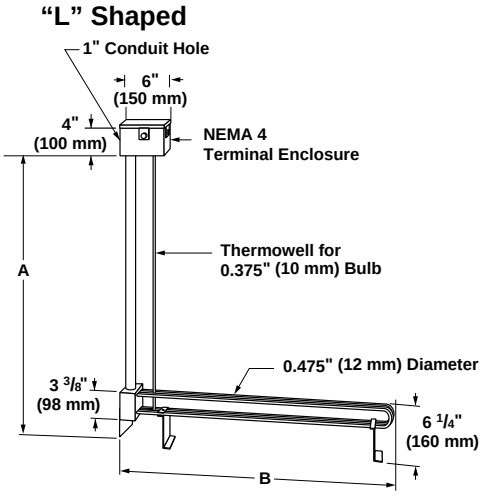

"O" Shaped

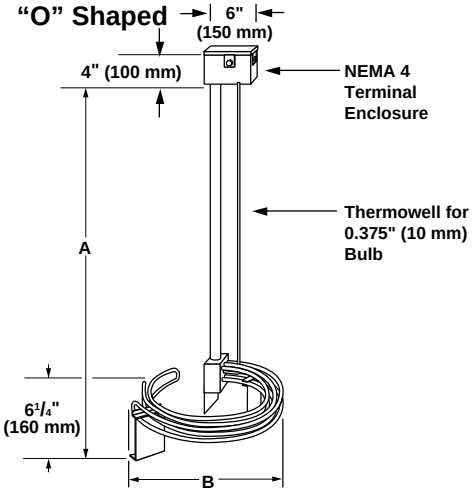

"L" Shaped

WATROD Description	kW	A Dimension inch	(mm)	B Dimension inch	(mm)	Code No. 240V~(ac) 3-Phase	Code No. 480V~(ac) 3-Phase	Est. Ship. Weight lbs	(kg)
Applications: Process Water, Mild Caustic Solutions (2% Max), Clean Water									
48 W/in²	3	39 5/16	(1000)	14 5/8	(370)	**OLN714L3W**	**OLN714L13W①**	30	(14)
Incoloy®	6	39 5/16	(1000)	22 5/8	(575)	**OLN722L3W**	**OLN722L5W**	40	(19)
(7.5 W/cm²)	9	39 5/16	(1000)	30 1/8	(765)	**OLN730C3W**	**OLN730C5W**	45	(21)
	12	51 5/16	(1300)	37 5/8	(955)	**OLN737L3W**	**OLN737L5W**	50	(23)
	15	51 5/16	(1300)	45 1/8	(1145)	**OLN745C3W**	**OLN745C5W**	65	(30)
	18	51 5/16	(1300)	52 5/8	(1335)	**OLN752L3W**	**OLN752L5W**	75	(34)
Applications: Citric and Phosphoric Acid Solutions, Caustic Solutions, Water Based Solutions									
23 W/in²	3	39 5/16	(1000)	22 5/8	(575)	**OLNA22L3W**	**OLNA22L5W**	40	(19)
Incoloy®	6	51 5/16	(1300)	37 5/8	(955)	**OLNA37L3W**	**OLNA37L5W**	50	(23)
(3.6 W/cm²)	9	51 5/16	(1300)	52 5/8	(1335)	**OLNA52L3W**	**OLNA52L5W**	75	(34)
Applications: Lightweight Oils, Degreasing Solutions, Mineral Oil									
23 W/in²	3	39 5/16	(1000)	22 5/8	(575)	**OLS722L3W**	**OLS722L5W**	40	(19)
Steel	6	51 5/16	(1300)	37 5/8	(955)	**OLS737L3W**	**OLS737L5W**	50	(23)
(3.6 W/cm2)	9	51 5/16	(1300)	52 5/8	(1335)	**OLS752L3W**	**OLS752L5W**	75	(34)

"O" Shaped

WATROD Description	kW	A Dimension inch	(mm)	B Dimension inch	(mm)	Code No. 240V~(ac) 3-Phase	Code No. 480V~(ac) 3-Phase	Est. Ship. Weight lbs	(kg)
Applications: Process Water, Mild Caustic Solutions (2% Max), Clean Water									
48 W/in²	3	39 5/16	(1000)	10 3/4	(270)	**ORN710N3W**	**ORN710N13W①**	30	(14)
Incoloy®	6	39 5/16	(1000)	13 1/2	(345)	**ORN713J3W**	**ORN713J5W**	40	(19)
(7.5 W/cm²)	9	39 5/16	(1000)	16	(405)	**ORN716A3W**	**ORN716A5W**	45	(21)
	12	51 5/16	(1300)	18 1/2	(470)	**ORN718J3W**	**ORN718J5W**	50	(23)
	15	51 5/16	(1300)	21 1/2	(540)	**ORN721E3W**	**ORN721E5W**	65	(30)
	18	51 5/16	(1300)	23 1/2	(595)	**ORN723J3W**	**ORN723J5W**	75	(34)
Applications: Citric and Phosphoric Acid Solutions, Caustic Solutions, Water Based Solutions									
23 W/in²	3	39 5/16	(1000)	13 1/2	(345)	**ORNA13J3W**	**ORNA13J5W**	40	(19)
Incoloy®	6	51 5/16	(1300)	18 1/2	(470)	**ORNA18J3W**	**ORNA18J5W**	50	(23)
(3.6 W/cm²)	9	51 5/16	(1300)	23 1/2	(595)	**ORNA23J3W**	**ORNA23J5W**	75	(34)
Applications: Lightweight Oils, Degreasing Solutions, Mineral Oil									
23 W/in²	3	39 5/16	(1000)	13 1/2	(345)	**ORS713J3W**	**ORS713J5W**	40	(19)
Steel	6	51 5/16	(1300)	18 1/2	(470)	**ORS718J3W**	**ORS718J5W**	50	(23)
(3.6 W/cm²)	9	51 5/16	(1300)	23 1/2	(595)	**ORS723J3W**	**ORS723J5W**	75	(34)

All units are Assembly Stock.
Availability
Assembly Stock: Five to seven working days

Truck Shipment only
① Must be operated 3-phase only.

Tubular and Process Assemblies

F.O.B.: Hannibal, Missouri

Over-the-Side Heaters

L and O Shaped

Base Code Number

Includes moisture resistant (NEMA 4) terminal enclosure without thermostat

Enclosure with Thermostat

See chart below for order code suffix

Thermostat	Temperature °F	Temperature (°C)	Max. A Dimension inch	Max. A Dimension (mm)	Code No. Suffix: Moisture Resistant	Code No. Suffix: Explosion Resistant	Code No. Suffix: Exp./Moist. Resistant
Single Pole Single Throw (SPST) ①	30-250	(0-120)	84	(2135)	**2A**	**E2A**	**E/W2A**
	175-550	(80-290)	84	(2135)	**3A**	**E3A**	**E/W3A**
	300-700	(150-350)	60	(1525)	**10**	**E10**	**E/W10**
Double Pole Single Throw (DPST) ②	60-250	(15-120)	52	(1320)	**5**	**E5**	**E/W5**
	60-250	(15-120)	52	(1320)	**5A**	**E5A**	**E/W5A**
	100-550	(40-290)	60	(1525)	**6**	**E6**	**E/W6**
	100-550	(40-290)	52	(1320)	**7**	**E7**	**E/W7**
	100-550	(40-290)	52	(1320)	**7A**	**E7A**	**E/W7A**
On-Off Manual Reset (DPST)	60-250	(15-120)	55	(1395)	**8**	**E8**	**E/W8**
	100-550	(40-290)	60	(1525)	**9**	**E9**	**E/W9**

① SPST thermostats require an electrical contactor if operated at 480V~(ac); at 240V~(ac) over 22 amps; or wired three phase.

② DPST thermostats require an electrical contactor if operated at 480V~(ac) over 21 amps; at 240V~(ac) over 30 amps; or wired three phase wye.

How to Order

To order a stock unit, please specify:

- Watlow code number
- Volts/watts
- Phase
- Options
- Quantity

If our stock units do not meet your application needs, Watlow will provide **made-to-order** units. Consult your Watlow representative and provide the following information:

- Application
- Volts/watts
- Phase
- Number of circuits
- Watt density
- Number of heating elements and sheath material
- ‘A’ dimension
- ‘B’ dimension
- Options, including terminal enclosure type
- Quantity

Availability

Assembly Stock: Five to seven working days

Modified Stock ③: Five to seven working days

Made-to-Order: Five to seven weeks

Options, complexity and quantity may affect availability and lead times. Consult factory.

③ Assembly Stock units with catalog options.

Over-the-Side Heaters

Vertical Loop Heater

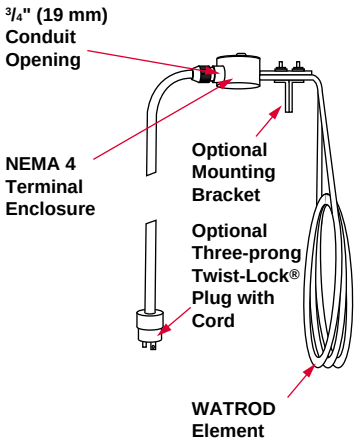

These light-weight, thin-profile vertical loop heaters are well suited for open tank applications.

A WATROD tubular element, formed into spiral loops, hugs the tank wall to maximize tank work space.

Available with four different sheath materials, vertical loop heaters come with options to meet application requirements.

Versatility is further enhanced with optional three-prong, Twist-Lock® plug and adjustable mounting brackets.

Performance Capabilities

- Incoloy® sheath watt densities to 60 W/in^2 (9.3 W/cm^2)
- Titanium sheath watt densities to 45 W/in^2 (7 W/cm^2)
- Steel sheath watt densities to 23 W/in^2 (3.5 W/cm^2)
- Wattages to 9kW
- Voltages to 600V~(ac)

Features and Benefits

- **WATROD element** is filled with compacted MgO insulation to maximize dielectric strength, heat transfer and life.
- **Long no-heat ends** form the heater's riser. No-heat ends leave only the element's looped portion submerged and heated. These are also formed into a right angle to move the terminal enclosure away from over the tank.
- **Moisture resistant (NEMA 4) terminal enclosure** offers easy access to terminal wiring.
- **Terminal enclosure materials** depend on element sheath material. These include:

Cast iron	Incoloy® Steel 316 stainless steel
PVC	Titanium

- **Conduit openings** accept ¾ inch conduit fittings to facilitate wiring.
- **Screw lug terminals** accept customer supplied ring-type wire terminals.
- **Ground terminals** are supplied to facilitate equipment grounding.

Applications

- Water heating
- Lightweight oils
- Salt baths
- Mild acid baths
- Cleaning solutions
- Plating solutions

Options

Three-prong, Twist-Lock® Plug

An optional flexible cord, with three-prong, Twist-lock® plug, provides easy connection to standard 220V~(ac) outlets. The 70 inch (1780 mm) cord is rubber insulated to resist oil, ozone, grease, chemicals, acids, solvents, weather and temperature extremes to 195°F (90°C).

To order, add the suffix letter **C** to the heater's base code number.

Wattages and Voltages

Watlow supplies stock vertical loop heaters as 240V~(ac), with wattages from five to eight kilowatts. To meet specific application needs, Watlow can configure heaters with voltages and wattages outside these parameters.

For more information about this option, consult your Watlow representative.

Passivation

During the manufacturing process, particles of iron or tool steel may become embedded in the stainless steel or alloy sheath. If not removed, these particles may corrode, produce rust spots and/or contaminate the process.

For critical applications, passivation will remove free iron from the sheath.

To order, specify **passivation**.

Tubular and Process Assemblies

F.O.B.: Hannibal, Missouri

Over-the-Side Heaters

Vertical Loop Heater

Options

Continued

Adjustable Mounting Brackets

To accommodate varying tank wall thicknesses, optional stainless steel mounting brackets adjust from 0 to 4¾ inches (0 to 120 mm).

To order, add suffix letter **B** to the vertical loop heater base code number.

Application Hints

- Determine recommended sheath material and watt density by using the ***Supplemental Applications Chart*** on **pages 263 to 266**. If unable to determine the appropriate sheath material and watt density for the fluid being heated, consult your Watlow representative.
- Ensure conduit openings and fittings are compatible with the environment around the heater enclosure.
- Use optional mounting brackets to position the heating element so there is ample space between the tank wall and the heating element.
- Ensure the liquid level stays above the heater's looped section. If not submerged, it will overheat or create a hazardous situation.
- Remove the heater periodically to inspect and clean the element. This maintenance procedure will prolong the heater's life.

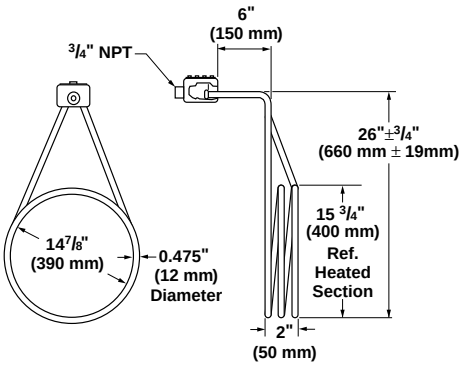

Vertical Loop Heaters

Applications	WATROD Description	kW	Code No. 240V~(ac) 1-Phase	Est.Ship. Weight lbs (kg)
Conventional Plating Baths Such as Copper Plating, Cyanide Type; Tin Plating, Alkaline Stannate Type; Brass and Bronze; Nickel, Chrome, Gold and Silver Plating and Iron Chromide. Nitrites, Permanganates, Persulfates and Dichromates.	**43 W/in²** **Titanium** (6.7 W/cm²)	8	**VLT10W8** ①	28 (13)
Water Heating and Mild Acids	**40 W/in²** **Incoloy®** (6.2 W/cm²)	8	**VLN10W8**	28 (13)
Mild Acid Baths	**40 W/in²** **316 SS** (6.2 W/cm²)	8	**VLR10W8**	28 (13)
Alkaline Solutions Which Do Not Contain Fluorides, Fluoroborates or Fluorosilicates, Pyrophosphate Copper, Ferric Chloride, Iron Chloride; Bright Dips and Pickles Containing Nitric, Phosphoric, and Chromic Acids	**27 W/in²** **Titanium** (4.2 W/cm²)	5	**VLT10W5** ①	28 (13)
Water Heating, Corrosive Liquids and Salt Baths	**23 W/in²** **Incoloy®** (3.6 W/cm²)	5	**VLN10W5**	26 (12)
Citrus Juices, Mild Acid Baths and Other Fluids Normally Corrosive to Steel	**23 W/in²** **316 SS** (3.6 W/cm²)	5	**VLR10W5**	26 (12)
Oil Tempering Baths, Salt Baths, Alkaline Cleaning Solutions, Cyanide Cleaning Solutions	**23 W/in²** **Steel** (3.6 W/cm²)	5 8	**VLS10W5** **VLS10W8**	26 (12) 26 (12)

① Standard

All units are Stock unless otherwise noted.
Availability
Stock: Same day shipment
Standard: Five weeks
Made-to-Order: Eight weeks

Tubular and Process Assemblies

F.O.B.: Hannibal, Missouri

Over-the-Side Heaters

Vertical Loop Heater

How to Order

To order a stock vertical loop heater, please specify:

- Watlow code number
- Volts/watts
- Options
- Quantity

If our stock units do not meet your application needs, Watlow will provide **made-to-order** units.

Consult your Watlow representative and provide the following information:

- Application
- Volts/watts
- Watt density
- Dimensions
- No-heat section
- Heating element diameter and sheath material
- Options
- Quantity

Availability

Stock: Same day shipment

Modified Stock ①: Five to seven working days

Standard: Three weeks

Made-to-Order: Five to seven weeks

Options, complexity and quantity may affect availability and lead times. Consult factory.

① Stock units with catalog options.

Drum

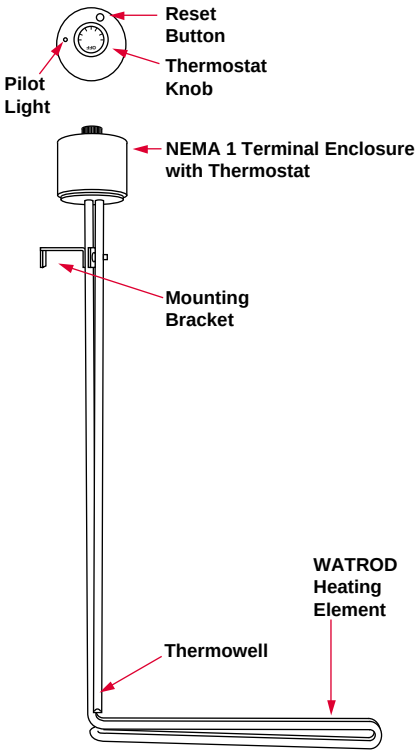

Designed for direct immersion in a standard 55 gallon steel drum, these heaters install easily through the two inch (50 mm) bung hole.

These one to four kilowatt WATROD heaters come prewired with a thermostat, manual reset button and pilot light in a general purpose (NEMA 1) terminal enclosure. This internal tank temperature sensing feature protects against overheating.

Performance Capabilities

- Incoloy® sheath watt densities to 60 W/in^2 (9.3 W/cm^2)
- Wattages to 9kW
- Voltages to 600V~(ac)

Features and Benefits

- **Light-weight, rugged construction** resists damage during installation or removal.
- **Stainless steel mounting bracket** adjusts to varying immersion depths to keep the heating element above settled sludge.
- **A 0.475 inch (12 mm) diameter Incoloy® WATROD element** has its hairpins repressed (recompacted) after bending to assure MgO density, dielectric strength, heat transfer and life.
- **Integral, on-off, manual reset, Type 8 thermostat**, rated from 60 to 250°F (15 to 120°C), senses process temperature and helps protect against overheating.
- **Pilot light** indicates if heater is cycled on or off.
- **30 inch (760 mm) long no-heat ends** form the heater's riser. No-heat ends leave only the element's heated portion submerged.
- **General purpose (NEMA 1) terminal enclosure** has one inch (25 mm) conduit openings to facilitate wiring.
- **UL® and CSA component recognition** to 480 and 600V~(ac) maximum under file numbers E52951 and 31388 respectively.

Tubular and Process Assemblies

Over-the-Side Heaters

Drum

Applications

- Melting heat sensitive materials such as wax, lard, grease and coconut oil
- Water and water-based solution heating
- Freeze protection

Options

Terminal Enclosures

A general purpose (NEMA 1) terminal enclosure, with integral thermostat, is supplied on all Watlow drum heaters. As an option, moisture resistant (NEMA 4) and explosion resistant (NEMA 7) terminal enclosures are available to protect both wiring and the thermostat.

To order, add the suffix letter **W** for moisture resistant (NEMA 4) or **E** for explosion resistant (NEMA 7) to the drum heater's base code number.

Wattages and Voltages

Watlow routinely supplies drum heaters in 120, 240 and 480V~(ac) in one or four kilowatt versions. Watlow will configure heaters with voltages and wattages outside these parameters.

For more information about this option, consult your Watlow representative.

Three-prong, Twist-Lock® Plug

An optional flexible cord, with three-prong, Twist-lock® plug, provides easy connection to standard 220V~(ac) outlets. The 70 inch (1780 mm) cord is rubber insulated to resist oil, ozone, grease, chemicals, acids, solvents, weather and temperature extremes to 195°F (90°C).

To order, add the suffix letter **CP** to the drum heater base code number.

Application Hints

- Determine recommended sheath material and watt density by using the ***Supplemental Applications Chart*** on **pages 263 to 266**. If unable to determine the correct sheath material and watt density, consult your Watlow representative.
- Ensure that the element's heated portion is fully immersed at all times. If the element is not sufficiently submerged, it will overheat and become damaged.
- Use drum heaters only in metal drums.
- Do not use the thermostat as an on-off switch. Use a disconnect switch or circuit breaker to cut power prior to servicing.
- Ensure that conduit openings and fittings are compatible with the environment around the heater enclosure.
- Use the adjustable mounting bracket to raise the heating element above the drum's sludge level.
- Periodically remove the heater to inspect and clean the element. This maintenance procedure will prolong the heater's life.

Tubular and Process Assemblies

Over-the-Side Heaters

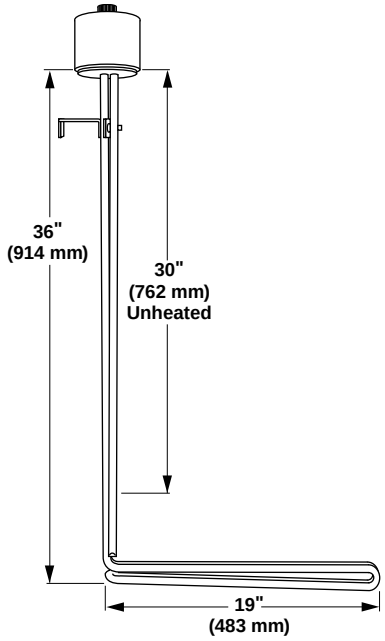

Drum Heater

WATROD Description	kW	Code No. 120V~(ac) 1-Phase	Code No. 240V~(ac) 1-Phase	Code No. 480V~(ac) 1-Phase	Est. Ship. Weight lbs(kg)
Applications: Solvents, Water and Water Based Solutions					
32 W/in² **Incoloy®** (5 W/cm²)	4		**OLDN10S4**	**OLDN10S11**	35 (16)
Applications: Melting Oils, Lard, Fats, Tar					
8 W/in² **Incoloy®** (1.3 W/cm²)	1	**OLDN1S1**	**OLDN10S1**		35 (16)

All units are stock.

Availability

Stock: Same day shipment

How to Order

To order a stock drum heater, please specify:

- Watlow code number
- Volts/watts
- Options
- Quantity

If stock units do not meet your application needs, Watlow will provide **made-to-order** units.

Consult your Watlow representative and provide the following:

- Application
- Volts/watts
- Watt density
- Dimensions
- No-heat section
- Heating element diameter and sheath material
- Options
- Quantity

Availability

Stock: Same day shipment

Modified Stock ①: Five to seven working days

Standard: Three weeks

Made-to-Order: Five to seven weeks

Options, complexity and quantity may affect availability and lead times. Consult factory.

① Stock units with catalog options.

Tubular and Process Assemblies

Quick Ship

On stock chart units:
- *Three to five working days on most heaters*
- *10 working days on special voltages and/or wattages*
- *15 working days on special element lengths*

Duct Heaters

Constructed of sturdy 0.430 inch (11 mm) diameter WATROD heating elements mounted to a ¼ inch (6 mm) thick steel flange, duct heaters are easily adapted to many non-pressurized, air-heating systems.

They are easily installed in applications requiring a wide range of temperature vs. air flow combinations.

Watlow duct heaters offer advantages over gas or oil fired and open coil electric units with:

- Installation flexibility—no flues or fuel lines.
- 100 percent energy efficient—no energy loss up the flue.
- Universal availability of electricity.
- Resistance coil in Incoloy® sheath is protected from corrosive environments.

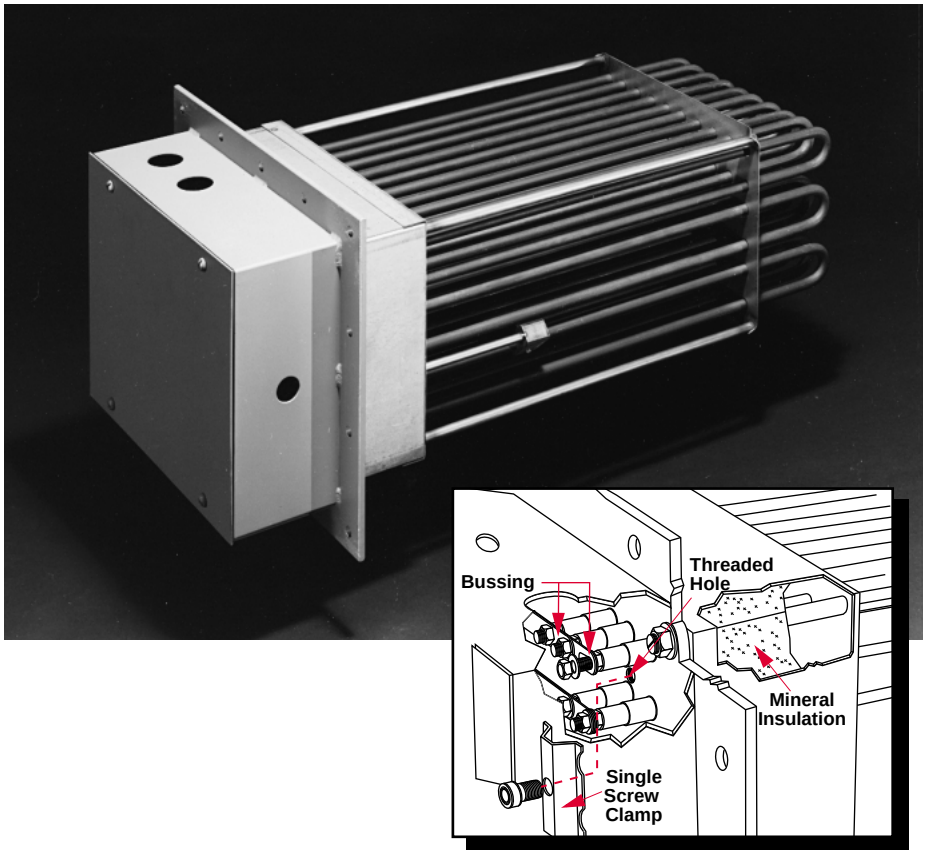

Performance Capabilities

- Watt densities to 40 W/in² (6.2 W/cm²)
- Recommended process temperatures from -20 to 1200°F (-7 to 650°C)
- Wattages to 2.2 megawatts
- Voltages to 600V~(ac)

Features and Benefits

- **Long life Incoloy® sheath** resists corrosion/oxidation while protecting resistance coils against contamination.
- **MgO insulation filled elements**, compacted to rock hard density maximize dielectric strength, heat transfer and life.
- **Field replaceable heating elements** permit easy service and reduce downtime. Element change-out is made simple by a single screw clamp.
- **3½ inches (90 mm) thick mineral insulation** keeps wiring cooler and reduces heat loss.
- **Vented general purpose (NEMA 1) terminal enclosure** ensures cooler terminations.
- **A ¼ inch (6 mm) inside diameter thermowell** accepts an optional Type J or K thermocouple for accurate sheath temperature sensing.
- **Rigid stainless steel supports** prevent element sagging or deformation in various mounting positions.
- **A ¼ inch (6 mm) thick steel flange**, with ⅜ inch (10 mm) diameter mounting holes, easily bolts to the duct wall.
- **WATROD hairpins are repressed (recompacted)** after bending to assure MgO density that eliminates hot spots and electrical insulation voids.
- **Stock heaters feature 6, 12, 18, 24, 30, 36, 42, 48, 54, and 60 elements** to meet a wide variety of kW demands.
- **One or three phase voltages** to meet local power supplies.
- **Maximum 48 amps per circuit** complies with National Electrical Code (NEC).
- **Duct heaters with general purpose enclosures meet UL® and CSA component recognition** to 480 and 600V~(ac) maximum respectively—UL® and CSA file numbers are E52951 and 31388.

Incoloy® is a registered trademark of Special Metals Corporation.

UL® is a registered trademark of Underwriter's Laboratories, Inc.

Duct Heaters

Applications

- Drying ovens
- Autoclaves
- Furnaces
- Load banks
- Heat treating
- Reheating
- HVAC
- Paint drying

Choosing a Duct Heater

The following English and metric graphs, shown on **pages 413 to 414**, will help you to select the correct duct heater. These graphs include: *Watt Density vs. Air Temperature/Velocity, Watt Density vs. Sheath Temperature and Pressure Drop vs. Air Velocity*.

These graphs, with the quick formulas on this page, along with information specific to your application, will determine the correct duct heater specifications. However, if engineering assistance is needed, contact your Watlow representative.

Required Application Information

- Desired outlet air temperature
- Inlet air temperature
- Delta T—the temperature difference between inlet and desired outlet temperature
- Air volume (CFM/CMM) measured at both inlet temperature and pressure

- Air velocity in feet per minute (FPM); meters per minute (MPM) which equals:

English

$$\text{FPM} = \frac{\text{CFM measured at standard conditions}}{\text{Duct cross section area at heater in ft}^2}$$

Metric

$$\text{MPM} = \frac{\text{CMM measured at normal conditions}}{\text{Duct cross section area at heater in m}^2}$$

- Minimum duct heater wattage (kW). This can be determined by:

English

$$\text{kW} = \frac{\text{CFM x Delta T (°F) x 1.1(safety factor)}}{3000}$$

Metric

$$\text{kW} = \frac{\text{CMM x Delta T (°C) x 1.1(safety factor)}}{48}$$

Note: The duct heater, or combination of duct heaters, used for the process should be equal to or exceed the minimum wattage calculation.

Tubular and Process Assemblies

Duct Heaters

Watt Density vs. Air Temperature/Velocity

To decide watt density requirements, first determine the desired outlet air temperature and velocity in feet per minute. Then follow the lines on the graph for velocity and process temperature to the watt density curve's intersecting point. This shows the recommended watt density based on a maximum sheath temperature of 1400°F (760°C). **For longer heater life, lower watt densities should be chosen.**

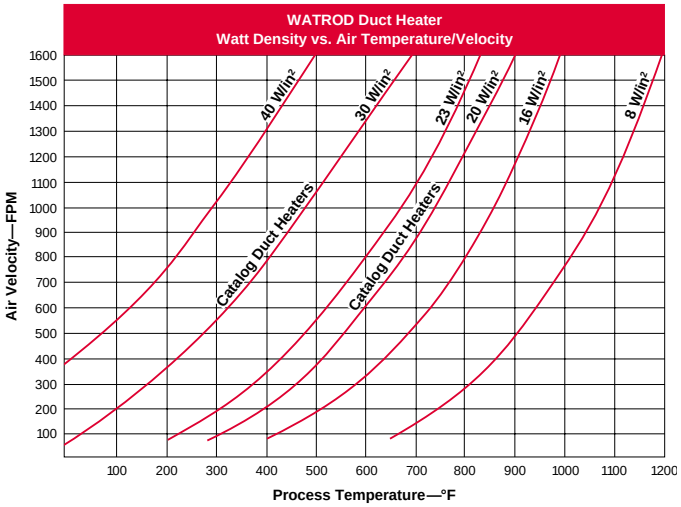

Estimated Sheath Temperature = 1400°F

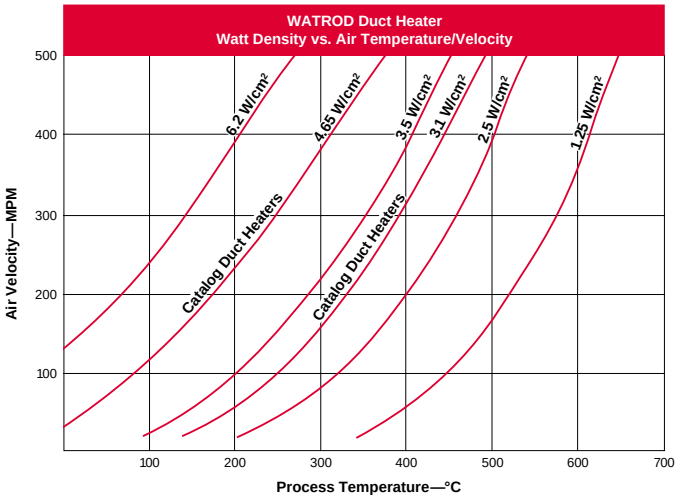

Estimated Sheath Temperature = 760°C

Watt Density vs. Sheath Temperature

The *Watt Density vs. Sheath Temperature* graph shows the air velocity (FPM or MPM) required to operate a WATROD duct heater at specific watt densities or sheath temperatures. Also depicted is the appropriate watt density vs. sheath temperature at a specified air flow.

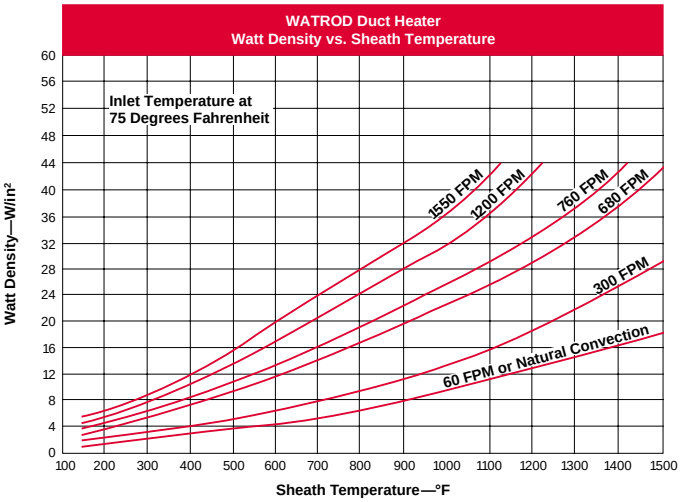

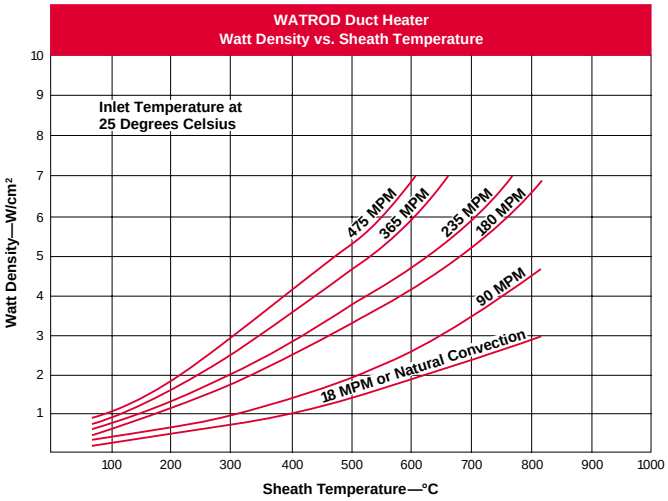

Duct Heaters

Pressure Drop vs. Air Velocity

The rate at which pressure drops through the duct heater is critical for properly sizing blowers and pumps. *The Pressure Drop vs. Air Velocity* graph gives recommended maximum velocities in feet per minute and meters per minute according to the air velocity and duct heater size.

To determine the pressure drop through the duct heater, follow the air velocity (FPM or MPM) over to the appropriate curve which identifies the duct heater size. Then, take the intersecting point down to the approximate pressure drop value.

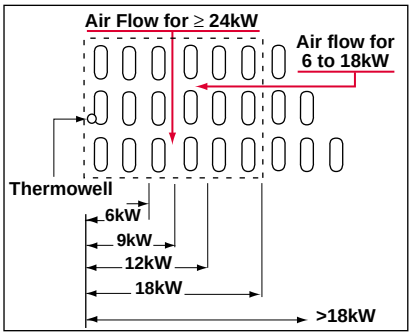

Note: Viewing from the element ends—the recommended air flow direction through element bundle changes at > 18kW.

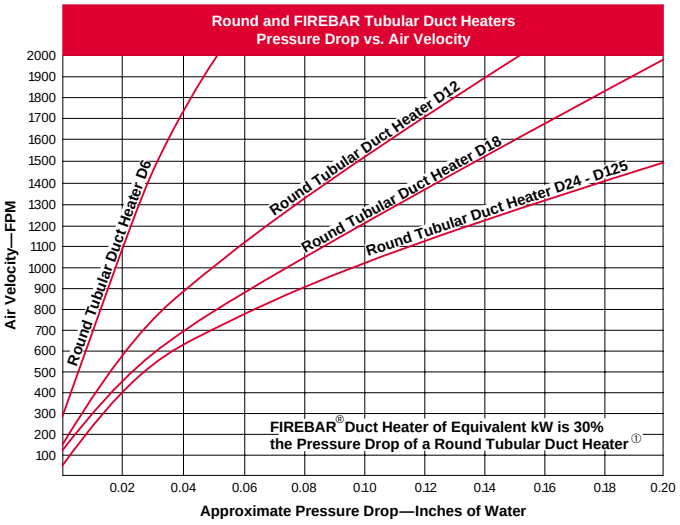

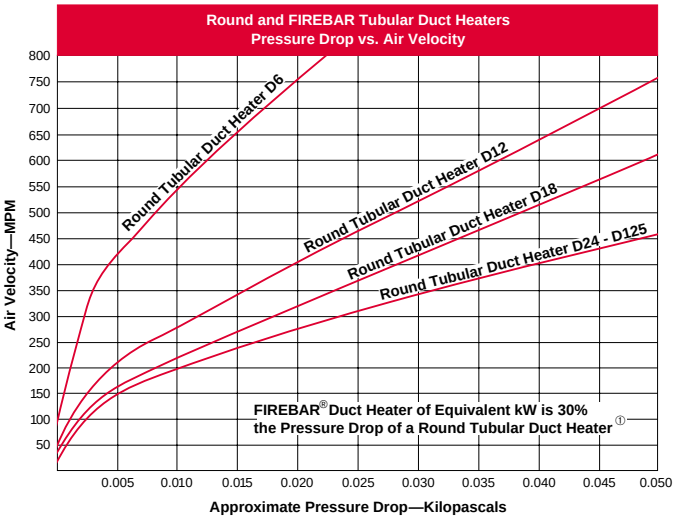

① FIREBAR® flat tubular element duct heaters can be custom designed and built when they enhance your application output or performance. Although duct heaters are not normally constructed with FIREBAR elements, we show the pressure drop reduction using FIREBAR as a distinct advantage.

Options

Sheath Material

Watlow duct heaters can be made with element sheath materials other than Incoloy®.

Consult your Watlow representative for details and availability.

Wattages/Voltages

To meet specific application needs, voltage and wattage combinations outside stock product parameters are available.

For more information about this option, consult your Watlow representative.

Tubular and Process Assemblies

Duct Heaters

Options

Continued

Terminal Enclosures

In addition to the standard, general purpose (NEMA 1) terminal enclosure, Watlow offers the following optional terminal enclosures to meet specific application requirements:

- Moisture resistant (NEMA 4)
- Stainless steel corrosion resistant (NEMA 4X—consult factory)
- Explosion resistant (NEMA 7—consult factory)
- Dust resistant (NEMA 12)

Thermocouples

Type J or **K** thermocouples, inserted in the thermowell, accurately sense element sheath temperature for over-temperature conditions.

To sense process temperature, sensing element should be located down stream from the duct heater. This will eliminate incorrect sensing caused by radiant heat.

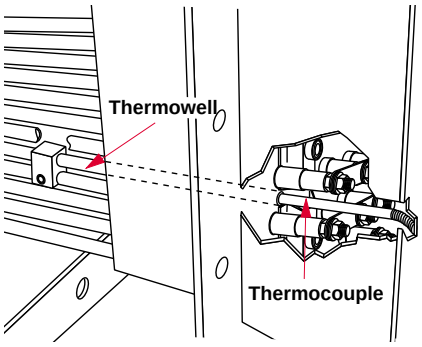

Duct heater thermowell holds thermocouple for sensing sheath temperature.

Thermocouples are supplied with 120 inch (3050 mm) leads (longer lead lengths available). Unless otherwise specified, thermocouples are supplied with temperature ranges detailed on the *Thermocouple Types* chart.

Using a thermocouple requires an appropriate temperature and power control. These must be purchased separately. Watlow offers a wide variety of temperature and power controls to meet virtually all applications. Temperature controls can be configured to accept process variable inputs, too. Consult your Watlow representative for details.

To order a thermocouple, add the appropriate suffix letter to the duct heater's base code number, as indicated on the Build-a-Code chart on **page 418**.

Thermocouple Types

ASTM Type	Conductor Characteristics Positive	Conductor Characteristics Negative	Recommended ① Temperature Range °F	Recommended ① Temperature Range (°C)
J	Iron (Magnetic)	Constantan (Non-magnetic)	0 to 1000	(-20 to 540)
K	Chromel® (Non-magnetic)	Alumel® (Magnetic)	0 to 2000	(-20 to 1100)

① **Type J** and **Type K** thermocouples are rated 32 to 1382°F and 32 to 2282°F (0-750°C and 0-1250°C), respectively. Watlow does not recommend exceeding temperature ranges shown on this chart for the tubular product line.

Application Hints

- Mount duct heaters horizontally to lower enclosure temperatures and promote unit life.
- Orient heating elements as per the air flow illustration on **page 414**.
- Promote heater life by keeping sheath temperature below the 1400°F (760°C) maximum.
- Measure process temperature in the outlet stream, away from the heater.
- Maintain wiring integrity by keeping enclosure temperature below 400°F (205°C).
- Thermal cycling can cause terminations to loosen. Periodically check and tighten all electrical connections.
- Size power feeder wires in accordance with NEC and other applicable codes.
- Protect employees against electrical shock by properly grounding the unit per NEC specifications.

Tubular and Process Assemblies

Duct Heaters

① Stock heaters with six and 12 elements have one 1 inch NPT conduit opening.

Stock heaters with 18, 24, 30 and 42 elements have two 1 inch NPT conduit openings.

Stock heaters with 36, 48, 54 and 60 elements have two 1 inch NPT and two 1¼ inch NPT conduit openings.

② All flanges are 12 inches wide.

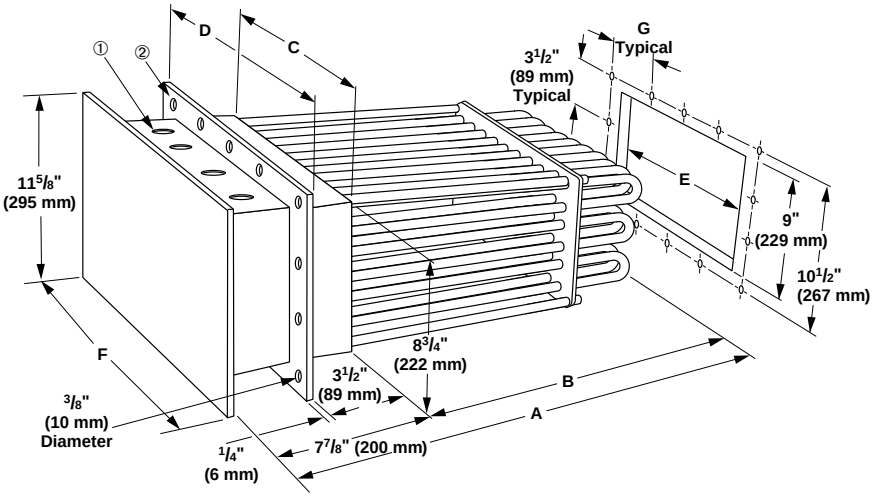

Duct Heater Dimensions

Dimension Reference No.	Number of Elements	A Dimension in	A Dimension (mm)	B Dimension in	B Dimension (mm)	C Dimension in	C Dimension (mm)	D Dimension in	D Dimension mm)	E Dimension in	E Dimension (mm)	F Dimension in	F Dimension (mm)	G Dimension in	G Dimension (mm)
1	6	27⅞	(708)	20	(508)	2¾	(70)	6½	(165)	3	(76)	5 ¾	(146)	2½	(64)
2	12	27⅞	(708)	20	(508)	4¾	(121)	8 ½	(215)	5	(127)	7 ¾	(197)	3½	(89)
3	18	27⅞	(708)	20	(508)	6¾	(171)	10½	(267)	7	(178)	9 ¾	(248)	3½	(76)
4	24	27⅞	(708)	20	(508)	8¾	(222)	12½	(318)	9	(229)	11 ¾	(298)	2¾	(70)
5	30	27⅞	(708)	20	(508)	10¾	(273)	14½	(368)	11	(279)	13 ¾	(349)	3¼	(83)
6	36	27⅞	(708)	20	(508)	12¾	(324)	16½	(419)	13	(330)	15 ¾	(400)	3¾	(95)
7	42	27⅞	(708)	20	(508)	14¾	(375)	18½	(470)	15	(381)	17 ¾	(451)	4¼	(108)
8	48	27⅞	(708)	20	(508)	16¾	(425)	20½	(521)	17	(432)	19 ¾	(502)	4¾	(121)
9	54	27⅞	(708)	20	(508)	18¾	(476)	22½	(572)	19	(483)	21 ¾	(552)	5¼	(133)
10	60	27⅞	(708)	20	(508)	20¾	(527)	24½	(622)	21	(533)	23 ¾	(603)	5¾	(146)
11	60	32⅞	(835)	25	(635)	20¾	(527)	24½	(622)	21	(533)	23 ¾	(603)	5¾	(146)
12	60	40⅜	(1026)	32½	(826)	20¾	(527)	24½	(622)	21	(533)	23 ¾	(603)	5¾	(146)
13	60	49⅜	(1254)	41½	(1054)	20¾	(527)	24½	(622)	21	(533)	23 ¾	(603)	5¾	(146)

20 W/in² (3.1 W/cm²)

kW	Dimension Reference No.	Number of Elements	Code No. 240V~(ac) 1-Phase	# of Circ.	240V~(ac) 3-Phase	# of Circ.	480V~(ac) 1-Phase	# of Circ.	480V~(ac) 3-Phase	# of Circ.	Est. Ship. Weight lbs	(kg)
6	1	6	**D6S10**	1	**D6S3**	1	**D6S11**	1	**D6S5**	1	50	(23)
12	2	12	**D12S10**	1	**D12S3**	1	**D12S11**	1	**D12S5**	1	55	(25)
18	3	18	**D18S10**	2	**D18S3**	1	**D18S11**	1	**D18S5**	1	65	(30)
24	4	24	**D24S10**	2	**D24S3**	2	**D24S11**	1	**D24S5**	1	95	(43)
30	5	30			**D30S3**	2	**D30S11**	2	**D30S5**	1	120	(55)
36	6	36			**D36S3**	2	**D36S11**	2	**D36S5**	1	135	(62)
42	7	42			**D42S3**	2	**D42S11**	2	**D42S5**	2	155	(71)
48	8	48			**D48S3**	4	**D48S11**	2	**D48S5**	2	195	(89)
54	9	54			**D54S3**	3	**D54S11**	3	**D54S5**	2	205	(93)
60	10	60			**D60S3**	4	**D60S11**	4	**D60S5**	2	235	(107)
75	11	60			**D75S3②**	4	**D75S11**	4	**D75S5**	2	260	(118)
100	12	60							**D100S5②**	4	290	(132)
125	13	60							**D125S5②**	4	310	(141)

All duct heaters are Assembly Stock unless otherwise noted.

② Standard

Availability

Assembly Stock: Three to five working days

Standard: 10 working days

Truck Shipment only

Tubular and Process Assemblies

Duct Heaters

30 W/in² (4.7 W/cm²)

kW	Dimension Reference No.	Number of Elements	Code No. 240V~(ac) 1-Phase	# of Circ.	240V~(ac) 3-Phase	# of Circ.	480V~(ac) 1-Phase	# of Circ.	480V~(ac) 3-Phase	# of Circ.	Est. Ship. Weight lbs	(kg)
9	1	6	**D6SX10**	1	**D6SX3**	1	**D6SX11**	1	**D6SX5**	1	50	(23)
18	2	12	**D12SX10**	2	**D12SX3**	1	**D12SX11**	1	**D12SX5**	1	55	(25)
27	3	18	**D18SX10**	3	**D18SX3**	2	**D18SX11**	2	**D18SX5**	1	65	(30)
36	4	24	**D24SX10**	4	**D24SX3**	2	**D24SX11**	2	**D24SX5**	1	95	(43)
45	5	30			**D30SX3**	5	**D30SX11**	2	**D30SX5**	2	120	(55)
54	6	36			**D36SX3**	3	**D36SX11**	3	**D36SX5**	2	135	(62)
63	7	42			**D42SX3**	7	**D42SX11**	3	**D42SX5**	2	155	(71)
72	8	48			**D48SX3**	4	**D48SX11**	4	**D48SX5**	2	195	(89)
81	9	54			**D54SX3**	6	**D54SX11**	6	**D54SX5**	3	205	(93)
90	10	60			**D60SX3**	5	**D60SX11**	4	**D60SX5**	4	235	(107)
115	11	60			**D75SX3②**	10	**D75SX11**	5	**D75SX5**	4	260	(118)
150	12	60							**D100SX5②**	4	290	(132)
190	13	60							**D125SX5②**	5	310	(141)

Replacement Elements

Replaceable heating elements provide easy field service and reduce downtime. Element change-out is made simple by a single screw clamp.

To order replacement elements, specify the **replacement element code number** (from the table) that corresponds to the original Watlow duct heater code number. Then specify **quantity.**

All duct heaters are Assembly Stock unless otherwise noted.
Availability
Assembly Stock: Three to five working days
Standard: 10 working days
Truck Shipment only

Replacement Elements

Original Duct Heater Code Numbers	Replacement Element Volts	Watts	A Dimension in	(mm)	Replacement Element Code No.	Availability	Est. Net Weight lbs	(kg)
20 W/in² (3.1 W/cm²)								
D6S3 to D60S3	240	1000	27⅞	(708)	**D6240**	Stock	1.0	(0.5)
D6S5 to D60S5	480	1000	27⅞	(708)	**D6480**	Stock	1.0	(0.5)
D75S3	240	1250	32⅞	(835)	**D75240**	Standard	1.0	(0.5)
D75S5	480	1250	32⅞	(835)	**D75480**	Stock	1.0	(0.5)
D100S5	480	1667	40⅜	(1026)	**D100480**	Stock	1.4	(0.7)
D125S5	480	2083	49⅜	(1254)	**D125480**	Stock	1.7	(0.8)
30 W/in² (4.7 W/cm²)								
D6SX3 to D60SX3	240	1500	27⅞	(708)	**D6X240**	Stock	1.0	(0.5)
D6SX5 to D60SX5	480	1500	27⅞	(708)	**D6X480**	Stock	1.0	(0.5)
D75SX3	240	1917	32⅞	(835)	**D75X240**	Standard	1.0	(0.5)
D75SX5	480	1917	32⅞	(835)	**D75X480**	Stock	1.0	(0.5)
D100SX5	480	2500	40⅜	(1026)	**D100X480**	Stock	1.4	(0.7)
D125SX5	480	3167	49⅜	(1254)	**D125X480**	Stock	1.7	(0.8)

② Standard

F.O.B.: Hannibal, Missouri

Duct Heaters

Build-a-Code

_____ - _____ - _____

Duct Heater Base Code Number

(Includes general purpose (NEMA 1) enclosure)

Terminal Enclosure Type
W = Moisture resistant (NEMA 4)
D = Dust resistant (NEMA 12)

Thermocouple Sensor
J = Type J
K = Type K

How to Order

To order stock duct heaters, please specify:

- Watlow code number
- Volts/watts
- Phase
- Options
- Quantity

If our stock units do not meet your application needs, Watlow can provide a made-to-order unit. For **made-to-order** units please consult your Watlow representative and provide the following information:

- Application (inlet and outlet air temperature, CFM/CMM, duct size and mounting orientation)
- Volts/watts
- Phase
- Number of circuits
- Watt density
- Number of heating elements
- Sheath material
- Element ('B' dimension) length
- Mounting flange material and mounting hole layout
- Insulation thickness and material
- Terminal enclosure type
- Options
- Quantity

Availability

Assembly Stock: Three to five working days

Modified Stock①: Five to seven working days

Standard: 10 working days

Made-to-Order: Five to seven weeks

Replacement Elements Only

Stock: Same day shipment

Standard: 10 working days

Made-to-Order: Four weeks

Options, complexity and quantity may affect availability and lead times. Consult factory.

① Stock or Assembly Stock units with catalog options.

Tubular and Process Assemblies

Modular Duct Heater

Watlow has developed a new line of process air heaters that offer improved performance and increased versatility in medium to low temperature applications.

The new duct heaters are modular and consist of two parts. The first is a 6kW heater available in either 240 or 480 volts, single or three phase.

The second part of the heater consists of the electrical housing that protects each module's termination area and a main flange that bolts into the user's ductwork. The heater modules are installed in the housing and main flange via rectangular slots in the main flange. The range of modules that can be accommodated in various duct heater assemblies, range from 1-10 modules. A range of 6-60kW, in 6kW increments is achieved.

The new design of the modular duct heater offers increased reliability. The individual modules are removable through the housing of the assembly, which eliminates the need to pull the complete heater from the ductwork. This reduces downtime and costs because the heating elements can be replaced individually.

Performance improvements include quicker response time and reduced infiltration from the air stream being heated into the electrical enclosure.

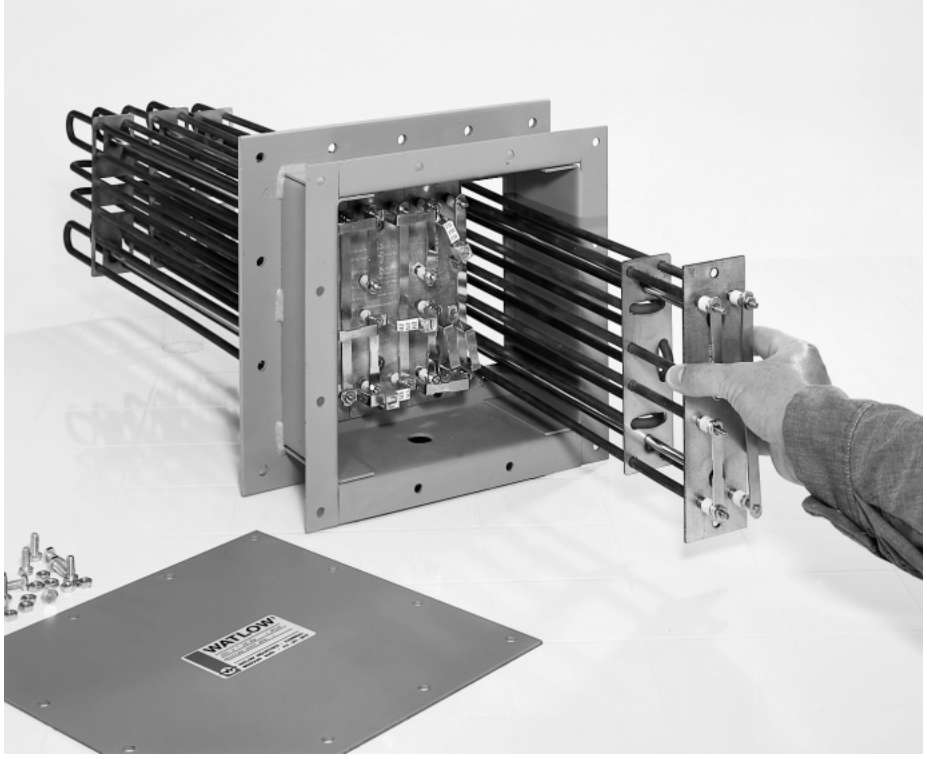

Features and Benefits

- **Individual modules removable through housing** reduces downtime for replacement of module.
- **27 percent reduction in heat-up time as compared to traditional 0.430 inch diameter duct heater elements** result in a faster response time.
- **Smaller diameter elements (0.315 inch)** result in a 25 percent lower energy usage on initial heat-up.
- **31 percent lighter weight than traditional tubular duct heaters** reduces shipping costs and increases worker safety.
- **Greater free cross sectional area** results in lower pressure drop.
- **Improved seal between element and electrical housing** results in lower electrical housing temperature.
- **Flexible module wiring** allows user to sequentially stage modules.

Applications

- Low temperature ovens
- Parts drying
- Semiconductor clean room environmental heating
- Plastic curing
- Load banks
- Heated air knives
- Food dehydration
- Heat shrink tunnels

Modular Duct Heater

Velocity vs. Process Temperature

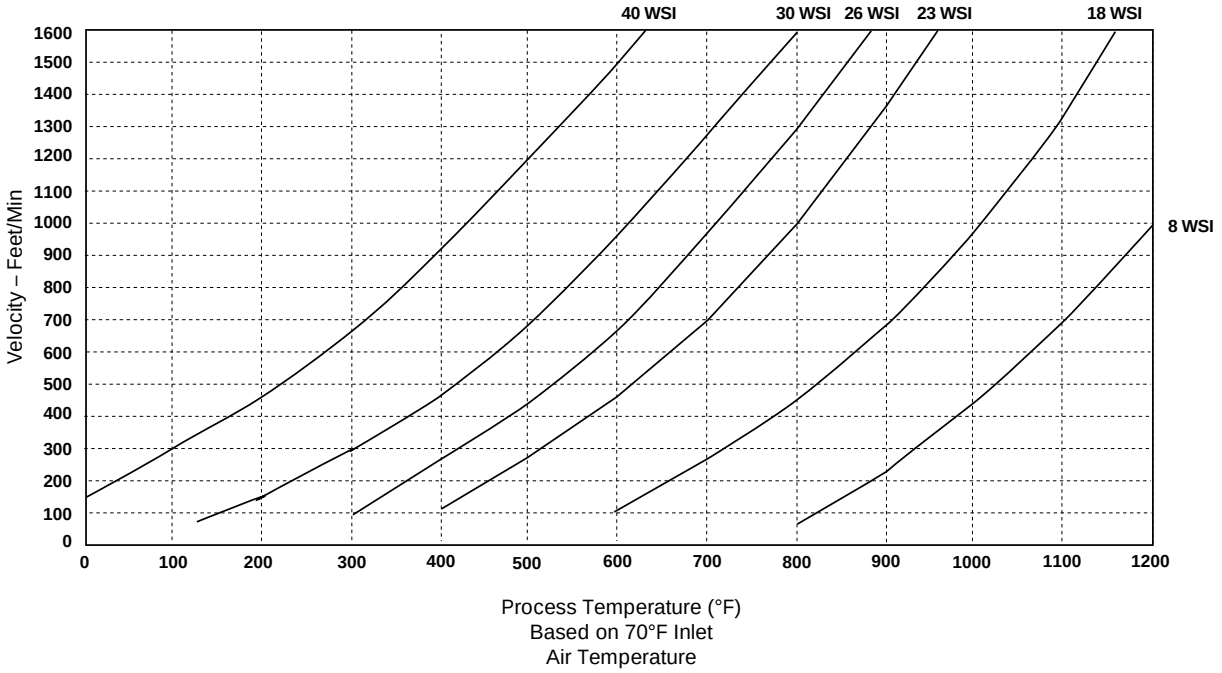

Watt Density vs. Sheath Temperature

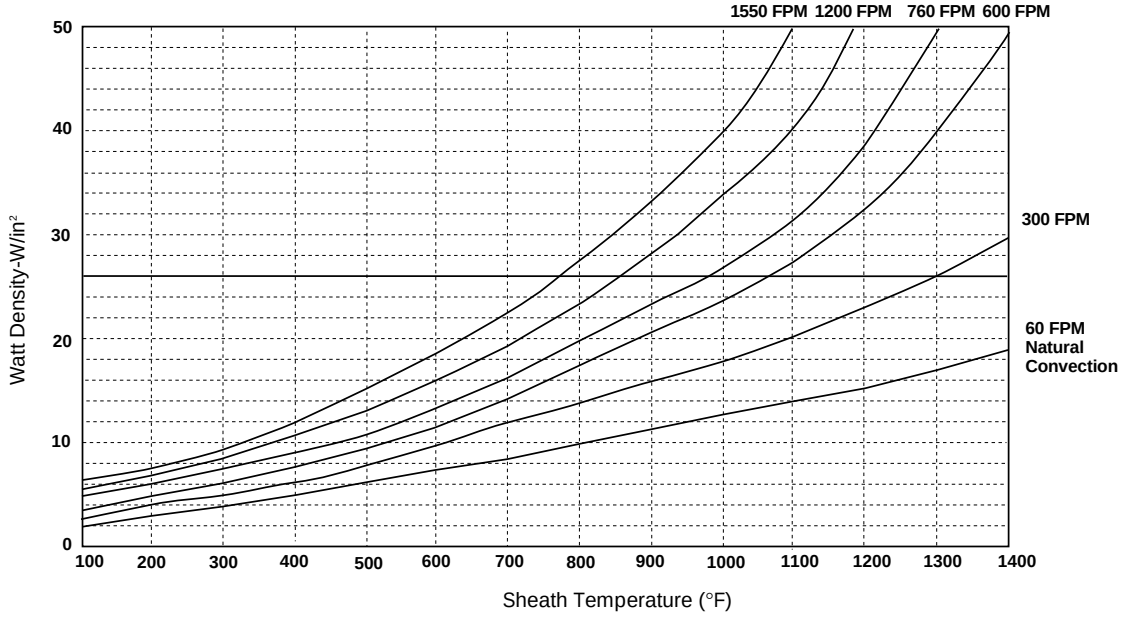

Tubular and Process Assemblies

Modular Duct Heater

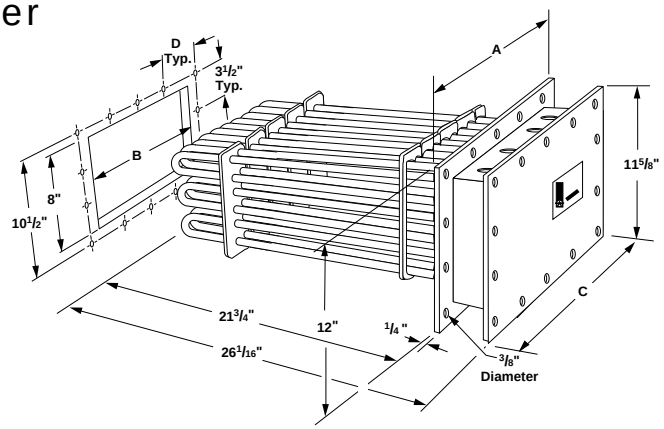

Application: Air Heating – Maximum outlet temperature – 750°F

Watt Density W/in2	kW	Volts	Phase	No. of Circuits	No. of Modules	Est. Shipping Wt. lbs	Availability	Code No.	Dimensions in. A	B	C	D
26	6	240	1	1	1	35	Assy. Stk	**MDH6SI0**	6.50	2.50	5.75	2.50
26	6	240	3	1	1	35	Assy. Stk	**MDH6S3**	6.50	2.50	5.75	2.50
26	6	480	1	1	1	35	Assy. Stk.	**MDH6S11**	6.50	2.50	5.75	2.50
26	6	480	3	1	1	35	Assy. Stk.	**MDH6S5**	6.50	2.50	5.75	2.50
26	12	240	1	2	2	39	Assy. Stk.	**MDH12SI0**	8.50	4.75	7.75	3.50
26	12	240	3	1	2	39	Assy. Stk.	**MDH12S3**	8.50	4.75	7.75	3.50
26	12	480	1	1	2	39	Assy. Stk.	**MDH12S11**	8.50	4.75	7.75	3.50
26	12	480	3	1	2	39	Assy. Stk.	**MDH12S5**	8.50	4.75	7.75	3.50
26	18	240	1	3	3	46	Assy. Stk.	**MDH18SI0**	10.50	7.00	9.75	3.00
26	18	240	3	1	3	46	Assy. Stk.	**MDH18S3**	10.50	7.00	9.75	3.00
26	18	480	1	1	3	46	Assy. Stk.	**MDH18S11**	10.50	7.00	9.75	3.00
26	18	480	3	1	3	46	Assy. Stk.	**MDH18S5**	10.50	7.00	9.75	3.00
26	24	240	1	4	4	67	Assy. Stk.	**MDH24S10**	12.50	9.25	11.75	2.75
26	24	240	3	2	4	67	Assy. Stk.	**MDH24S3**	12.50	9.25	11.75	2.75
26	24	480	1	2	4	67	Assy. Stk.	**MDH24S11**	12.50	9.25	11.75	2.75
26	24	480	3	1	4	67	Assy. Stk.	**MDH24S5**	12.50	9.25	11.75	2.75
26	30	240	3	2	5	84	Assy. Stk.	**MDH30S3**	15.75	11.50	15.00	3.56
26	30	480	1	2	5	84	Assy. Stk.	**MDH30S11**	15.75	11.50	15.00	3.56
26	30	480	3	1	5	84	Assy. Stk.	**MDH30S5**	15.75	11.50	15.00	3.56
26	36	240	3	2	6	95	Assy. Stk.	**MDH36S3**	18.00	13.75	17.25	4.13
26	36	480	1	2	6	95	Assy. Stk.	**MDH36S11**	18.00	13.75	17.25	4.13
26	36	480	3	1	6	95	Assy. Stk.	**MDH36S5**	18.00	13.75	17.25	4.13
26	42	240	3	3	7	109	Assy. Stk.	**MDH42S3**	20.25	16.00	19.50	4.69
26	42	480	1	3	7	109	Assy. Stk.	**MDH42S11**	20.25	16.00	19.50	4.69
26	42	480	3	2	7	109	Assy. Stk	**MDH42S5**	20.25	16.00	19.50	4.69
26	48	240	3	4	8	137	Assy. Stk.	**MDH48S3**	22.50	18.25	21.75	5.25
26	48	480	1	3	8	137	Assy. Stk.	**MDH48S11**	22.50	18.25	21.75	5.25
26	48	480	3	2	8	137	Assy. Stk.	**MDH48S5**	22.50	18.25	21.75	5.25
26	54	240	3	3	9	144	Assy. Stk.	**MDH54S3**	24.75	20.50	24.00	5.81
26	54	480	1	3	9	144	Assy. Stk.	**MDH54S11**	24.75	20.50	24.00	5.81
26	54	480	3	2	9	144	Assy. Stk.	**MDH54S5**	24.75	20.50	24.00	5.81
26	60	240	3	4	10	165	Assy. Stk.	**MDH60S3**	27.00	22.75	26.25	6.38
26	60	480	1	4	10	165	Assy. Stk.	**MDH6OS11**	27.00	22.75	26.25	6.38
26	60	480	3	2	10	165	Assy. Stk.	**MDH60S5**	27.00	22.75	26.25	6.38

Options include individual modules with optional NEMA1 housing, high temperature thermocouple kit and blank flange modules.

Modular duct heaters with **1** and **2** modules have conduit openings for **1**-1 inch NPT fitting.
Modular duct heaters with **3,4,5,** and **7** modules have conduit openings for **2**-1 inch NPT fittings.
Modular duct heaters with **6,8,9,** and **10** modules have conduit openings for **2**-1 ¼ inch NPT and **2**-1 inch NPT fittings.

Modular Duct Heater

Individual Module Dimensions

Specifications

- Module rating - 240 or 480V~(ac), 6kW, three phase or one phase
- Watt Density - 26 W/in2
- Elements - 0.315 inch dia. Incoloy® elements
- High-limit thermocouple installed by drilling premarked hole in flange
- 6-60kW range when mounted in duct heater assembly

Application Information

- Maximum sheath temperature = 1200˚F
- Maximum outlet temperature = 750˚F

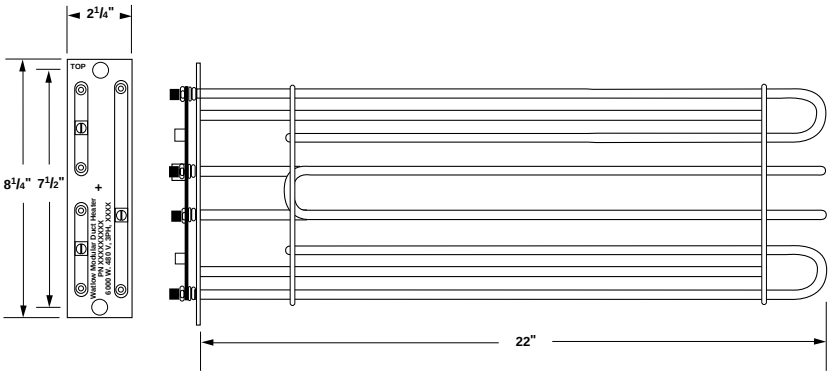

Options

Terminal Enclosures

Terminal enclosures are available in NEMA 1 and 4 configurations.

High-Limit Thermocouples

High-limit thermocouples can be supplied on specified modules or shipped as a kit. Available thermocouples are Types J and K.

Blank Module Covers

Module covers are available for covering blank slots on the main flange. This allows for adding heater module at a later time to allow higher wattage outputs.

Watlow Code Number	Description
Replacement Modules	
M63	6kW, 240 volts, 3 phase
M610	6kW, 240 volts, 1 phase
M65	6kW, 480 volts, 3 phase
M611	6kW, 480 volts, 1 phase
High Limit Thermocouple Kits	
MTCJ	Type J (0-1000°F)
MTCK	Type K (0-2000°F)
Blank Module Covers	
MBLK	Cover slots in main flange

Availability

- **Assembly Stock**: Three to five working days
- **Made-to-Order**: Eight weeks

Consult factory for more details.

Tubular and Process Assemblies

Thermostats and Accessories

Thermostats regulate temperature in non-critical applications. They sense temperature, within a preset range and cycle heaters on and off to maintain the set point.

Thermostats may be mounted inside a terminal enclosure or remote mounted (separate from the heater assembly). If using a remote mounted thermostat, be sure to order sufficient capillary tube length to permit installation.

All Watlow thermostats are normally closed circuit and either single pole, single throw (SPST) or double pole, single throw (DPST). They can be used with or without an enclosure.

Thermostat selection should be based on temperature range, capillary tube length and sensor bulb size (diameter/length).

Remote Mount Thermostat Assemblies

Remote mounted thermostat assemblies can be supplied with the following enclosures:

- General purpose (NEMA 1)
- Moisture resistant (NEMA 4)
- Explosion resistant (NEMA 7)
- Explosion/moisture resistant (NEMA 7/4)
- Dust resistant (NEMA 12)

Pilot Light

An optional pilot light gives visual indication whether the power supplied to the heating element(s) is on or off.

To order, please specify suffix code **PL11**.

Thermostat Conversion Kits

Kits are available to convert a heater's general purpose (NEMA 1) terminal enclosure to accept either a single or double pole thermostat.

Thermostats with Enclosures

NEMA 1 Single and Double Pole

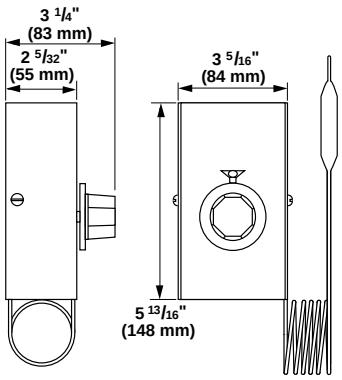

NEMA 4 and 12 Single Pole

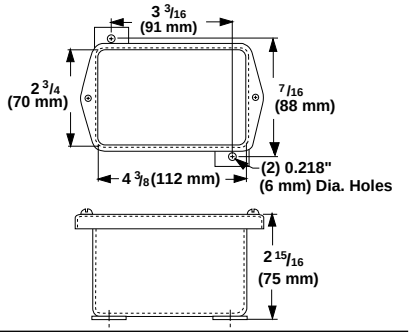

NEMA 7 Single Pole

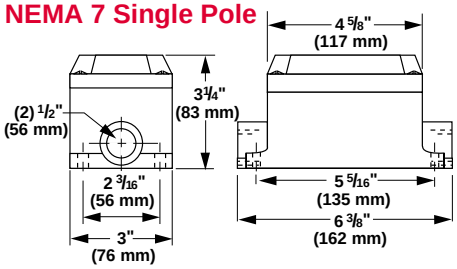

NEMA 4 and 12 Double Pole

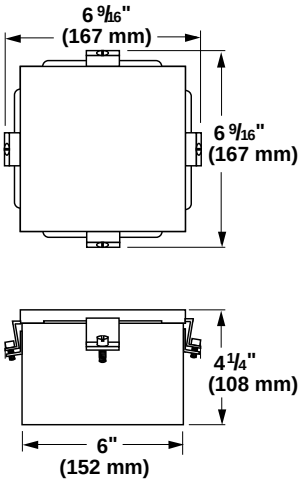

NEMA 7 Double Pole

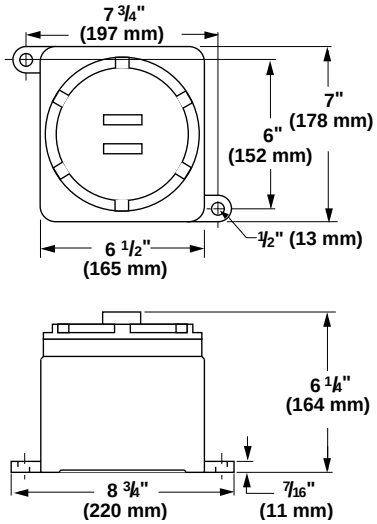

The kit contains all the necessary parts to change out the existing terminal enclosure cover and mount the thermostat inside. These are **hardware and wiring kits** only.

Single pole conversion kit covers 1, 1¼ , 2 and 2½ inch NPT screw plugs. To order, specify code **K492-000-35-(thermostat type)**.

Double pole conversion kit covers 2 and 2½ inch NPT screw plugs. To order, specify code **K492-000-34-(thermostat type)**.

Celsius Dial Scale

Thermostats are shipped with Fahrenheit (°F) dial scales. If your application requires a Celsius (°C) scale, order the optional dial face.

To order, specify code **CD**. Scale will match thermostat temperature range.

Incoloy® is a registered trademark of Special Metals Corporation.

Thermostats and Accessories

Application Hints

- Locate the thermostat where ambient temperatures do not exceed 150°F (65°C).
- Mount the thermostat in an enclosure that is compatible with the surrounding environment.
- Immerse the entire sensing bulb in the media being heated.
- Make sure the sensing bulb is mounted away from the heating element(s) to negate any undue influence on the sensing bulb's temperature "reading."
- Keep the capillary tube insulated from electrical connections.
- Do not use a thermostat for high-accuracy temperature sensing. Use an appropriate thermocouple, RTD or thermistor and temperature control.
- Do not use thermostats as a primary power switching device. Use a disconnect switch or circuit breaker to cut power when servicing.
- Interconnect the thermostat to the heater only if:

  - The heater has one circuit

  - The heater's ampere draw is lower than the thermostat's rated ampacity at prescribed voltage.
- Interconnect either a single or double pole thermostat with a single-phase heater when the supply voltage does not exceed 277V~(ac) for SPST or 480V~(ac) for DPST.
- Only interconnect three-phase delta heaters to DPST thermostats.
- Use a single pole thermostat for pilot duty where the thermostat is not interconnected with the heater, or heater exceeds the volt/amp rating.

Warning

Do not use thermostats for high-limit sheath protection. Thermostats fail in a closed circuit mode and will not cut power to the heaters. Limit control should be provided by an isolated, redundant sensor and control system of the appropriate type, design and installation.

Thermostats are precalibrated at the factory. No adjustment, other than selecting the desired operating temperature, is required. All wiring should be performed by qualified personnel and comply with the National Electrical Code and other applicable state and local codes.

To help assure you select the correct thermostat, as well as install and wire it properly, we have put together a few helpful hints. Schematics are provided for interconnecting thermostats to single- and three-phase heaters.

Pilot Duty Wiring

SPST,1-phase

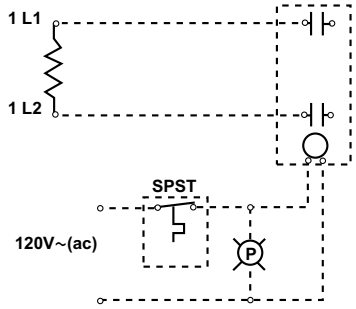

SPST, 3-phase delta

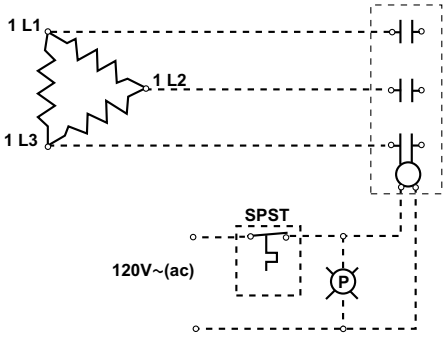

SPST, 3-phase wye

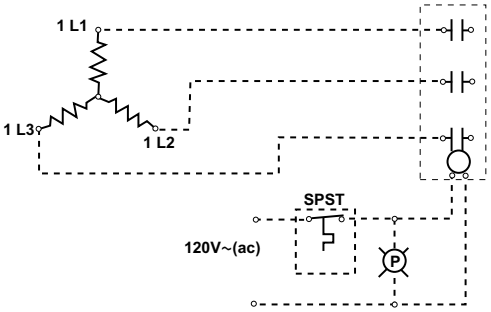

Interconnected Wiring

SPST, 1-phase

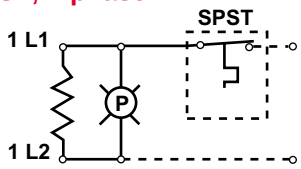

DPST, 1-phase

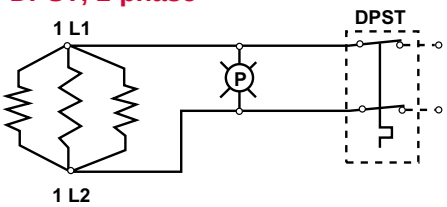

DPST, 3-phase delta

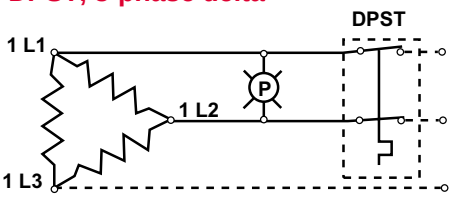

Tubular and Process Assemblies

F.O.B.: Hannibal, Missouri

Thermostats and Accessories

Thermostat

Control Mode	Type	Temperature Range °F	(°C)	Differential °F	(°C)	Ampacity @ Line Voltage 120	240	277	480	Bulb Diameter inch	(mm)	Bulb Length inch	(mm)	Capillary Length inch	(mm)	Terminal Type	Code No.	Est. Net Weight lbs	(kg)
On-off Temp Control	Single Pole Single Throw (SPST)	30-110	(0-40)	8	(0)	25	25	22	—	0.250	(6)	4 ¾	(121)	18	(455)		**1**	1	(0.4)
		30-250	(0-120)	15	(8)	25	25	22	—	0.250	(6)	3 ¼	(85)	18	(455)	#12 AWG	**2**	1	(0.4)
		30-250	(0-120)	15	(8)	25	25	22	—	0.250	(6)	3 ¼	(85)	84	(2135)	Stranded	**2A**	1	(0.4)
		175-550	(80-290)	26	(14)	25	25	22	—	0.250	(6)	3 ⅜	(85)	18	(455)	Leads	**3**	1	(0.4)
		175-550	(80-290)	26	(14)	25	25	22	—	0.250	(6)	2 ¾	(70)	84	(2135)		**3A**	1	(0.4)
		300-700	(150-350)	12	(7)	25	25	—	—	0.375	(10)	3 ¾	(95)	60	(1525)		**10**	1	(0.4)
		60-160	(15-70)	19	(10)	30	30	30	20	0.250	(6)	4 ⅜	(110)	14	(355)	#8-32	**12A**	1	(0.4)
	Double Pole Single Throw (DPST)	30-110	(0-40)	12	(7)	30	30	30	21	0.375	(10)	6 ¼	(160)	36	(915)		**4**	2	(0.9)
		60-250	(15-120)	12	(7)	30	30	30	21	0.375	(10)	4 ½	(115)	48	(1220)	#10-32	**5**	2	(0.9)
		60-250	(15-120)	12	(7)	30	30	30	21	0.250	(6)	6 ½	(165)	48	(1220)	Screw Lug	**5A**	2	(0.9)
		100-550	(40-290)	22	(12)	30	30	30	21	0.375	(10)	3 ⅞	(100)	48	(1220)		**7**	2	(0.9)
		100-550	(40-290)	22	(12)	30	30	30	21	0.250	(6)	7 1/16	(179)	48	(1220)		**7A**	2	(0.9)
On-off with Manual Reset	(DPST)	60-250	(15-120)	12	(7)	30	30	30	—	0.250	(6)	6 ½	(165)	48	(1220)	#10-32	**8**	2	(0.9)
		100-550	(40-290)	22	(12)	30	30	30	—	0.188	(8)	12	(305)	48	(1220)	Screw Lug	**9**	2	(0.9)
	(SPST)	350①	(180)	—		30	30	20	—	0.250	(6)	3 ½	(90)	36	(915)	#10-32 Screw Lug	**11**	1	(0.4)

① Fixed temperature setting
Availability
Stock: Same day shipment

How to Order

_____ - _____ - _____

Thermostat Code Number

(See stock chart above)

Enclosure (Remote Mount Only)

- **S** = General purpose (NEMA 1)
- **W** = Moisture resistant (NEMA 4)
- **E** = Explosion resistant (NEMA 7)
- **E/W** = Explosion/moisture resistant (NEMA 7/4)
- **D** = Dust resistant (NEMA 12)

Options

- **CD** = Celsius dial scale
- **CB** = Chrome bezel
- **LTB** = Liquid-tight brass fitting (⅜"-18 NPT)
- **PL11** = Pilot Light

Cross-Reference For Replacement Thermostat	Order With This Number
202-0-21-1 (small knob)	1
202-0-21-2 (small knob)	202-0-21-2MB
202-0-21-4	2
202-0-21-5	2A
202-0-21-3	3
202-0-21-8 (small knob)	202-0-21-8M
202-0-21-6	3A
202-0-4-2	4
202-0-4-6	5
202-0-4-17	5A
202-0-4-5	7
202-0-4-16	7A
202-0-3-1	8
202-0-3-3	9
202-0-1-13	10
202-0-29-2	11
202-0-41-2 (small knob)	12A

If you only have the thermostat code number use this cross-reference chart.

Availability

Thermostats

Stock: Same day shipment

Remote Mount Thermostats

Stock: Same day shipment

Assembly Stock: Three to five working days

Modified Stock②: Three to five working days

Standard: Eight to 10 working days

Options, complexity and quantity may affect availability and lead times. Consult factory.

② Stock or Assembly Stock units with catalog options.

F.O.B.: Hannibal, Missouri

Thermostats and Accessories

Low Liquid Level Sensor

The Watlow low liquid level sensor can protect a heating system by sensing when a liquid drops below a predetermined level. This is accomplished by locating the sensor at the minimum desired liquid level in the tank or vessel. The sensor's ASTM Type J thermocouple output can be connected to a variety of controls, alarms and limit protection devices.

To provide an additional margin of protection, the Type J thermocouple makes this low liquid level sensor respond considerably faster than conventional capillary bulb thermostats.

To order, specify code number **BCN5J1SJ**.

Application Hints

- Only use sensor in **non-flammable** liquids that are compatible with the Incoloy® sheath and 304 stainless steel screw plug.
- Application should tolerate sheath temperature at limit set point.
- The time delay between the low liquid level condition on-set, and the sensor's ability to signal the control device should be adequate to protect the heater(s). See *Installation and Maintenance Instructions* for details.

Controller Recommendation

- Use Watlow Safety Limit Temperature Control Series 142 (Code number **142A-3605-1300**). This controller features compact sub-panel mounting and is sealed against ambient environment. UL® recognized for limit protection (UL 991, "Tests For Safety-Related Controls Employing Solid State Devices").

  Controller supplied by Watlow's Winona, Minnesota facility.

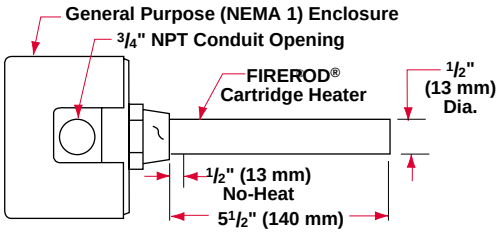

Specifications

Screw plug: 1" NPT

Plug material: 304 stainless steel

Sheath material: Incoloy®

Watt density: 13 W/in² (2 W/cm²)

Watts: 100

Volts: 120V~(ac)

Immersed length: 5½ inch (140 mm)

Thermocouple: ASTM Type J

Est. ship. wt.: 2 lbs (1 kg)

Availability

Stock: Same day shipment

Modified Stock①: Five to seven working days

Made-to-Order: Four to six weeks

Options, complexity and quantity may affect availability and lead times. Consult factory.

① Stock units with catalog options.

Protective Wells

Protective wells isolate and protect thermostat bulbs and other temperature sensors (thermo-couples, RTDs or thermistors). They allow inserting the sensing element sufficiently into the media being heated without being damaged.

Steel or stainless steel protective wells are available in three lengths. They are supplied with ½ inch NPT mounting and ⅜ inch-18 NPT internal thread for mating to a liquid-tight bushing (LTB).

All units are stock. To order, specify the appropriate code number from the stock table.

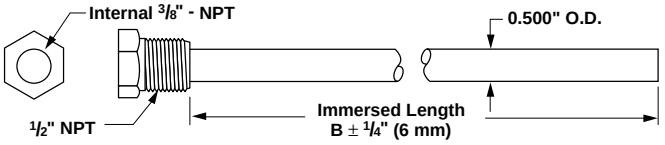

Protective Wells

Plug and Thermowell Material	Immersed B Dimension inch	(mm)	Code No.	Est. Ship. Weight lb	(kg)
Steel	12	(305)	**PWS12**	1	(0.5)
	24	(610)	**PWS24**	2	(1.0)
	36	(915)	**PWS36**	2	(1.0)
Stainless Steel	12	(305)	**PWSS12**	1	(0.5)
	24	(610)	**PWSS24**	2	(1.0)
	36	(915)	**PWSS36**	2	(1.0)

Availability

Stock: Same day shipment

Modified Stock②: Five to seven working days

Made-to-Order: Three weeks

Options, complexity and quantity may affect availability and lead-times. Consult factory.

② Stock units with catalog options.

Reference Data

Formulas, Conversions and Engineering Constants

Volts

$$\text{Volts} = \sqrt{\text{Watts X Ohms}}$$

$$\text{Volts} = \frac{\text{Watts}}{\text{Amperes}}$$

$$\text{Volts} = \text{Amperes X Ohms}$$

Ohms

$$\text{Ohms} = \frac{\text{Volts}}{\text{Amperes}}$$

$$\text{Ohms} = \frac{\text{Volts}^2}{\text{Watts}}$$

$$\text{Ohms} = \frac{\text{Watts}}{\text{Amperes}^2}$$

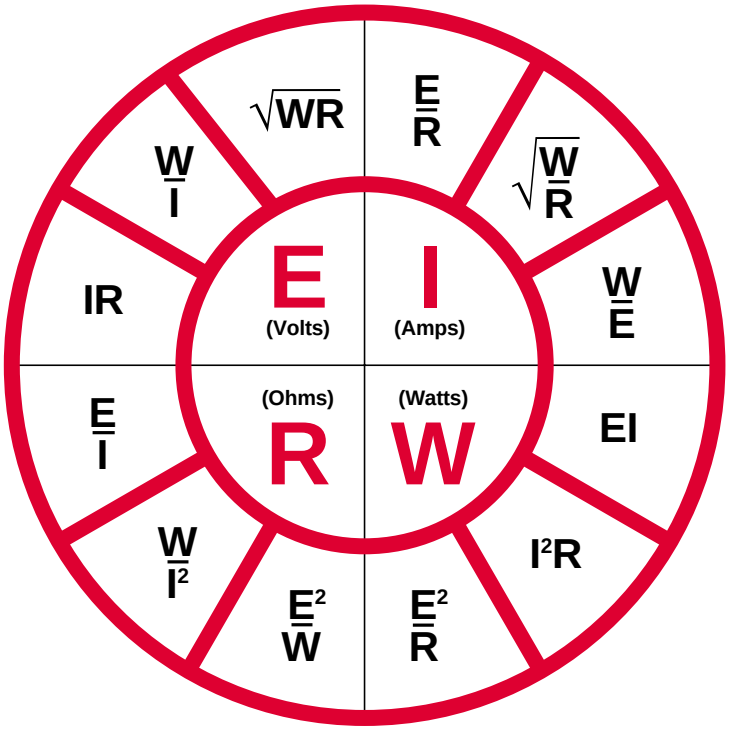

Amperes

$$\text{Amperes} = \frac{\text{Volts}}{\text{Ohms}}$$

$$\text{Amperes} = \frac{\text{Watts}}{\text{Volts}}$$

$$\text{Amperes} = \sqrt{\frac{\text{Watts}}{\text{Ohms}}}$$

Watts

$$\text{Watts} = \frac{\text{Volts}^2}{\text{Ohms}}$$

$$\text{Watts} = \text{Amperes}^2 \text{ X Ohms}$$

$$\text{Watts} = \text{Volts X Amperes}$$

Wattage varies directly as ratio of voltages squared

$$W_2 = W_1 \text{ X} \left(\frac{E_2}{E_1}\right)^2$$

$$\text{3 Phase Amperes} = \frac{\text{Total Watts}}{\text{Volts X 1.732}}$$

Formulas, Conversions and Engineering Constants

Typical 3 Phase Wiring Diagrams and Equations for Resistive Heaters

Definitions

For Both Wye and Delta (Balanced Loads)

V_P = Phase Voltage

V_L = Line Voltage

I_P = Phase Current

I_L = Line Current

R = $R_1 = R_2 = R_3$ = Resistance of each branch

W = Wattage

Wye and Delta Equivalents

$W_{DELTA} = 3\ W_{WYE}$

$W_{ODELTA} = \frac{2}{3}\ W_{DELTA}$

$W_{OWYE} = \frac{1}{2}\ W_{WYE}$

3-Phase Wye (Balanced Load)

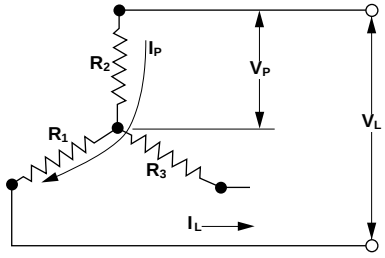

Equations For Wye Only

$I_P = I_L$
$V_P = V_L/1.73$
$W_{WYE} = V_L^2/R = 3(V_P^2)/R$
$W_{WYE} = 1.73\ V_L I_L$

3-Phase Open Wye (No Neutral)

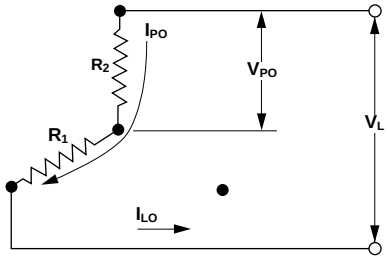

Equations For Open Wye Only
(No Neutral)

$I_{PO} = I_{LO}$
$V_{PO} = V_L/2$
$W_{0WYE} = \frac{1}{2}\ (V_L^2/R)$
$W_{0WYE} = 2\ (V_{PO}^2/R)$

3-Phase Delta (Balanced Load)

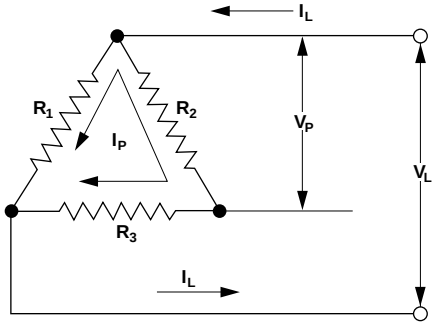

Equations For Delta Only

$I_P = I_L/1.73$
$V_P = V_L$
$W_{DELTA} = 3\ (V_L^2)/R$
$W_{DELTA} = 1.73\ V_L I_L$

3-Phase Open Delta

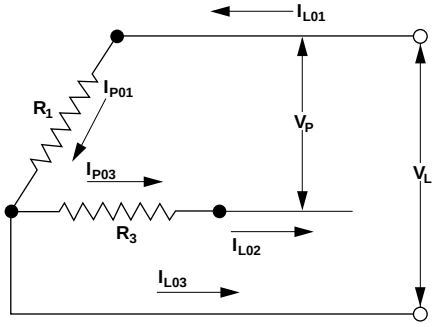

Equations For Open Delta Only

$V_P = V_L$
$I_{PO1} = I_{PO3} = I_{LO2}$
$I_{LO3} = 1.73\ I_{PO1}$
$W_{0DELTA} = 2\ (V_L^2/R)$

Reference Data

Quick Estimates of Wattage Requirements

The following tables can be used to make quick estimates of wattage requirements.

Kilowatt-Hours to Heat Steel ①

Amount of Steel (lb.)	Temperature Rise °F						
	50°	100°	200°	300°	400°	500°	600°
	Kilowatts to Heat in One Hour						
25	0.06	0.12	0.25	0.37	0.50	0.65	0.75
50	0.12	0.25	0.50	0.75	1.00	1.25	1.50
100	0.25	0.50	1.00	1.50	2.00	2.50	3.00
150	0.37	0.75	1.50	2.25	3.00	3.75	4.50
200	0.50	1.00	2.00	3.00	4.00	5.00	6.00
250	0.65	1.25	2.50	3.75	5.00	6.25	7.50
300	0.75	1.50	3.00	4.50	6.00	7.50	9.00
400	1.00	2.00	4.00	6.00	8.00	10.00	12.00
500	1.25	2.50	5.00	7.50	10.00	12.50	15.00
600	1.50	3.00	6.00	9.00	12.00	15.00	18.00
700	1.75	3.50	7.00	10.50	14.00	17.50	21.00
800	2.00	4.00	8.00	12.00	16.00	20.00	24.00
900	2.25	4.50	9.00	13.50	18.00	22.50	27.00
1000	2.50	5.00	10.00	15.00	20.00	25.00	30.00

① Read across in table from nearest amount in pounds of steel to desired temperature rise column and note kilowatts to heat in one hour.

Includes a 20% safety factor to compensate for high heat losses and/or low power voltage.

For Steel: Use table or metric equation.

$$kW = \frac{\text{Kilograms X Temperature Rise (°C)}}{\text{5040 X Heat-up Time (hrs.)}}$$

Kilowatt-Hours to Heat Oil ②

Amount of Oil		Temperature Rise °F					
Cubic Feet	Gallons	50°	100°	200°	300°	400°	500°
0.5	3.74	0.3	0.5	1	2	2	3
1.0	7.48	0.5	1.0	2	3	4	6
2.0	14.96	1.0	1.0	2	4	6	11
3.0	22.25	2.0	3.0	6	9	12	16
4.0	29.9	2.0	4.0	8	12	16	22
5.0	37.4	3.0	4.0	9	15	20	25
10.0	74.8	5.0	9.0	18	29	40	52
15.0	112.5	7.0	14.0	28	44	60	77
20.0	149.6	9.0	18.0	37	58	80	102
25.0	187	11.0	22.0	46	72	100	127
30.0	222.5	13.0	27.0	56	86	120	151
35.0	252	16.0	31.0	65	100	139	176
40.0	299	18.0	36.0	74	115	158	201
45.0	336.5	20.0	40.0	84	129	178	226
50.0	374	22.0	45.0	93	144	197	252
55.0	412	25.0	49.0	102	158	217	276
60.0	449	27.0	54.0	112	172	236	302
65.0	486	29.0	58.0	121	186	255	326
70.0	524	32.0	62.0	130	200	275	350
75.0	562	34.0	67.0	140	215	294	375

② Read across in table from nearest amount in gallons of liquids to desired temperature rise column and note kilowatts to heat in one hour.

Includes a 20% safety factor to compensate for high heat losses and/or low power voltage.

For Steel: Use table or metric equation.

$$kW = \frac{\text{Kilograms X Temperature Rise (°C)}}{\text{5040 X Heat-up Time (hrs.)}}$$

Add 5% for uninsulated tanks.

For Oil:

Use equation or table.

$$kW = \frac{\text{Gallons X Temperature Rise (°F)}}{\text{800 X Heat-up time (hrs.)}}$$

OR

$$kW = \frac{\text{Liters X Temperature Rise (°C)}}{\text{1680 X Heat-up time (hrs.)}}$$

Quick Estimates of Wattage Requirements

① Read across in table from nearest amount in gallons of liquid to desired temperature rise column and note kilowatts to heat in one hour.

For Heating Flowing Water:

kW = GPM X Temperature Rise (°F) X 0.16

OR

kW = Liters/min. X Temperature Rise (°C) X 0.076

For Heating Water in Tanks: Use equation or table.

$$kW = \frac{\text{Gallons X Temperature Rise (°F)}}{\text{375 X Heat-up Time (hrs)}}$$

OR

$$kW = \frac{\text{Liters X Temperature Rise (°C)}}{\text{790 X Heat-up Time (hrs)}}$$

Kilowatt-Hours to Heat Water ①

Amount of Liquid		Temperature Rise °F						
ft³	Gallons	20°	40°	60°	80°	100°	120°	140°
		Kilowatts to Heat in One Hour						
0.66	5	0.3	0.5	0.8	1.1	1.3	1.6	1.9
1.3	10	0.5	1.1	1.6	2.1	2.7	3.2	3.7
2.0	13	0.8	1.6	2.4	3.2	4.0	4.8	5.6
2.7	20	1.1	2.2	3.2	4.3	5.3	6.4	7.5
3.3	25	1.3	2.7	4.0	5.3	6.7	8.0	9.3
4.0	30	1.6	3.2	4.8	6.4	8.0	9.6	12.0
5.3	40	2.1	4.0	6.4	8.5	11.0	13.0	15.0
6.7	50	2.7	5.4	8.0	10.7	13.0	16.0	19.0
8.0	60	3.3	6.4	9.6	12.8	16.0	19.0	22.0
9.4	70	3.7	7.5	11.2	15.0	19.0	22.0	26.0
10.7	80	4.3	8.5	13.0	17.0	21.0	26.0	30.0
12.0	90	5.0	10.0	14.5	19.0	24.0	29.0	34.0
13.4	100	5.5	11.0	16.0	21.0	27.0	32.0	37.0
16.7	125	7.0	13.0	20.0	27.0	33.0	40.0	47.0
20.0	150	8.0	16.0	24.0	32.0	40.0	48.0	56.0
23.4	175	9.0	18.0	28.0	37.0	47.0	56.0	65.0
26.7	200	11.0	21.0	32.0	43.0	53.0	64.0	75.0
33.7	250	13.0	27.0	40.0	53.0	67.0	80.0	93.0
40.0	300	16.0	32.0	47.0	64.0	80.0	96.0	112.0
53.4	400	21.0	43.0	64.0	85.0	107.0	128.0	149.0
66.8	500	27.0	53.0	80.0	107.0	133.0	160.0	187.0

Kilowatt-Hours to Heat Air

Amt. of Air CFM	Temperature Rise °F										
	50°	100°	150°	200°	250°	300°	350°	400°	450°	500°	600°
100	1.7	3.3	5.0	6.7	8.3	10.0	11.7	13.3	15.0	16.7	20.0
200	3.3	6.7	10.0	13.3	16.7	20.0	23.3	26.7	30.0	33.3	40.0
300	5.0	10.0	15.0	20.0	25.0	30.0	35.0	40.0	45.0	50.0	60.0
400	6.7	13.3	20.0	26.7	33.3	40.0	46.7	53.3	60.0	66.7	80.0
500	8.3	16.7	25.0	33.3	41.7	50.0	58.3	66.7	75.0	83.3	100.0
600	10.0	20.0	30.0	40.0	50.0	60.0	70.0	80.0	90.0	100.0	120.0
700	11.7	23.3	35.0	46.7	58.3	70.0	81.7	93.3	105.0	116.7	140.0
800	13.3	26.7	40.0	53.3	66.7	80.0	93.3	106.7	120.0	133.3	160.0
900	15.0	30.0	45.0	60.0	75.0	90.0	105.0	120.0	135.0	150.0	180.0
1000	16.7	33.3	50.0	66.7	83.3	100.0	116.7	133.3	150.0	166.7	200.0
1100	18.3	36.7	55.0	73.3	91.7	110.0	128.3	146.7	165.0	183.3	220.0
1200	20.0	40.0	60.0	80.0	100.0	120.0	140.0	160.0	180.0	200.0	240.0

Use the maximum anticipated airflow. This equation assumes insulated duct (negligible heat loss). 70°F inlet air and 14.7 psia.

For Air:

Use equation or table.

$$kW = \frac{\text{CFM① X Temperature Rise (°F)}}{3000}$$

OR

$$kW = \frac{\text{Cubic Meters/Min① X Temperature Rise (°C)}}{47}$$

For Compressed Air:

$$kW = \frac{\text{CFM② x Density② X Temperature Rise (°F)}}{228}$$

OR

$$kW = \frac{\text{Cubic Meters/Min② X Temperature Rise (°C) X Density (kg/m}^3\text{)②}}{57.5}$$

① Measured at normal temperature and pressure.

② Measured at heater system inlet temperature and pressure.

Reference Data

Formulas, Conversions and Engineering Constants

Commonly Used Geometric Areas And Volumes

Areas and Dimensions of Plane Figures

The following illustrations show the areas of plane figures, the surfaces of solids, and the volumes of solids.

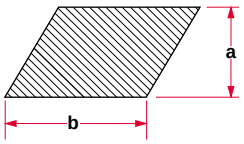

Square, Rectangle, Parallelogram

A = area.

$A = ab$
Note that dimension a is measured at right angles to line b.

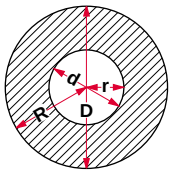

Circular Ring

A = area.

$A = \pi(R^2 - r^2)$
$= 0.7854\,(D^2 - d^2)$

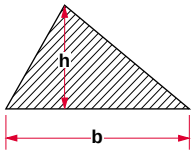

Triangle

A = area.

$A = \frac{bh}{2}$

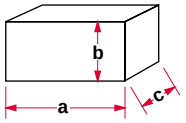

Cube or Square Prism

V = volume
A = area of surface.

$V = abc$
$A = 2ab + 2ac + 2bc$

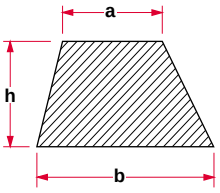

Trapezoid

A = area.

$A = \frac{(a + b)h}{2}$

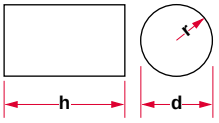

Cylinder

V = volume; S = area of cylindrical surface.

$V = \pi r^2 h = \frac{\pi d^2 h}{4}$

$S = 6.28rh = 3.14dh$
Total area A of cylindrical surface and end surfaces:
$A = 6.28r(r + h)$
$= 3.14d(\frac{1}{2}d + h)$

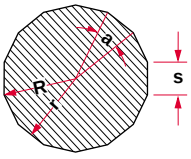

Regular Polygon

A = area
n = number of sides
s = length of side
$a = 360° \div n$

$A = \frac{nsr}{2} = \frac{ns}{2}\sqrt{R^2 - \frac{s^2}{4}}$

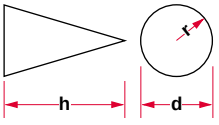

Cone

V = volume; A = area of conical surface.

$V = \frac{1}{3}\pi r^2 h$
$A = \pi r\sqrt{r^2 + h^2}$

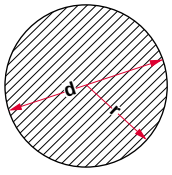

Circle

A = area;
C = circumference.

$A = \pi r^2 = \frac{\pi d^2}{4}$

$C = 2\pi r = \pi D$

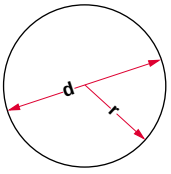

Sphere

V = volume; A = area of surface.

$V = \frac{4\pi r^3}{3} = \frac{\pi d^3}{6}$

$A = 4\pi r^2 = \pi d^2$

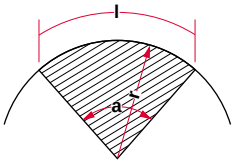

Circular Sector

A = area
l = length of arc;
a = angle, in degrees.
r = radius

$l = \frac{ra3.14}{180}$

$A = \frac{1}{2}rl$

$a = \frac{57.3l}{r}$

Reference Data

Formulas, Conversions and Engineering Constants

Conversion Factors

To Convert To...		Multiply...		By...
Atmospheres	(atm)	Bar		0.9869
Atmospheres	(atm)	Inches Mercury	(in Hg)	0.03342
Atmospheres	(atm)	Pounds/square inch	(psi)	0.06805
Atmospheres	(atm)	Torr		0.001316
Bar		Atmospheres	(atm)	1.0133
Bar		Pounds/square inch	(psi)	0.06895
British Thermal Units	(BTU)	Joules	(J)	0.000948
British Thermal Units	(BTU)	Kilowatt-hours	(kWH)	3412
British Thermal Units	(BTU)	Watt-hours	(WH)	3.412
British Thermal Units/hour	(BTU/h)	Kilocalories/hour	(kcal/h)	3.969
British Thermal Units/hour	(BTU/h)	Watts	(W)	3.412
British Thermal Units—inches hour-square foot—°F	(BTU—in) (h-ft^2—°F)	Watts/meter—°C	(W/m—°C)	6.933
British Thermal Units/pound	(BTU/lb)	Kilojoules/kilogram	(kJ/kg)	0.4299
British Thermal Units/pound—°F	(BTU/lb—°F)	Kilojoules/kilogram—°C	(kJ/kg—°C)	0.2388
Calories	(cal)	Joules	(J)	0.2388
Centimeters	(cm)	Feet	(ft)	30.48
Centimeters	(cm)	Inches	(in)	2.54
Centimeters/second	(cm/s)	Feet/minute	(FPM)	0.508
Cubic centimeters	(cm^3 or cc)	Cubic feet	(ft^3)	28,320
Cubic centimeters	(cm^3 or cc)	Cubic inches	(in^3)	16.39
Cubic centimeters	(cm^3 or cc)	Milliliters	(ml)	1.0
Cubic feet	(ft^3)	Cubic meters	(m^3)	35.32
Cubic feet	(ft^3)	Gallons, U.S.	(gal)	0.1337
Cubic feet	(ft^3)	Liters	(l)	0.03532
Cubic feet/minute	(CFM)	Cubic meters/hour	(m^3/h)	0.5885
Cubic feet/minute	(CFM)	Cubic meters/second	(m^3/s)	2119
Cubic feet/minute	(CFM)	Liters/second	(l/s)	2.119
Cubic inches	(in^3)	Cubic centimeters	(cm^3 or cc)	0.061
Cubic meters	(m^3)	Gallons, U.S.	(gal)	0.003785
Cubic meters	(m^3)	Liters	(l)	0.001
Cubic meters	(m^3)	Cubic feet	(ft^3)	0.02832
Cubic meters/hour	(m^3/h)	Cubic feet/minute	(CFM)	1.699
Cubic meters/hour	(m^3/h)	Gallons/minute	(GPM)	0.2271
Cubic meters/second	(m^3/s)	Cubic feet/minute	(CFM)	0.000472
Feet	(ft)	Centimeters	(cm)	0.03281
Feet	(ft)	Meters	(m)	3.281
Feet/minute	(FPM)	Centimeters/second	(cm/s)	1.969
Feet/minute	(FPM)	Meters/second	(m/s)	196.9
Gallons, Imperial		Gallons, U.S.	(gal)	0.8327

CONTINUED

Reference Data

Formulas, Conversions and Engineering Constants

Conversion Factors Continued

To Convert To...		Multiply...		By...
Gallons, U.S.	(gal)	Cubic feet	(ft^3)	7.481
Gallons, U.S.	(gal)	Cubic meters	(m^3)	264.2
Gallons, U.S.	(gal)	Gallons, Imperial		1.201
Gallons, U.S.	(gal)	Liters	(l)	0.2642
Gallons/minute	(gpm)	Cubic meters/hour	(m^3/h)	4.403
Gallons/minute	(gpm)	Liters/second	(l/s)	15.85
Grams	(g)	Ounces	(oz)	28.35
Grams	(g)	Pounds	(lb)	453.6
Grams/cubic centimeter	(g/cm^3)	Kilograms/cubic meter	(kg/m^3)	0.001
Grams/cubic centimeter	(g/cm^3)	Pounds/cubic foot	(lb/ft^3)	0.01602
Grams/cubic centimeter	(g/cm^3)	Pounds/cubic inch	(lb/in^3)	27.68
Inches	(in)	Centimeters	(cm)	0.3937
Inches	(in)	Millimeters	(mm)	0.03937
Inches Mercury	(in Hg)	Atmospheres	(atm)	29.92
Inches Mercury	(in Hg)	Torr		25.4
Joules	(J)	British Thermal Units	(BTU)	1055
Joules	(J)	Calories	(cal)	4.187
Joules	(J)	Watt-hours	(WH)	3600
Joules/second	(J/s)	British Thermal Units/hour	(BTU/h)	0.2931
Joules/second	(J/s)	Watts	(W)	1
Kilocalories/hour	(kcal/h)	BTU/hour	(BTU/h)	0.252
Kilograms	(kg)	Pounds	(lb)	0.4536
Kilograms/cubic meter	(kg/m^3)	Grams/cubic centimeter	(g/cm^3)	1000
Kilograms/cubic meter	(kg/m^3)	Pounds/cubic foot	(lb/ft^3)	16.02
Kilograms/square centimeter	(kg/cm^2)	Pounds/square inch	(psi)	0.07031
Kilojoules	(kJ)	Watt-hours	(WH)	3.6
Kilojoules/kilogram	(kJ/kg)	British Thermal Units/pound	(BTU/lb)	2.326
Kilojoules/kilogram—°C	(kJ/kg—°C)	British Thermal Units/pound—°F	(BTU/lb—°F)	4.187
Kilometers/hour	(km/h)	Miles/hour	(MPH)	1.609
Kilopascals	(kPa)	Pounds/square inch	(psi)	6.895
Kilowatts	(kW)	British Thermal Units/hour	(BTU/h)	0.0002931
Kilowatts	(kW)	Watts	(W)	0.001
Kilowatt-hours	(kWH)	British Thermal Units	(BTU)	0.0002931
Kilowatt-hours	(kWH)	Watt-hours	(WH)	0.001
Liters	(l)	Cubic Feet	(ft^3)	28.32
Liters	(l)	Cubic Meters	(m^3)	1000
Liters	(l)	Gallons, U.S.	(gal)	3.785
Liters/second	(l/s)	Cubic feet/minute	(CFM)	0.4719
Liters/second	(l/s)	Gallons/minute	(GPM)	0.06309

CONTINUED

Formulas, Conversions and Engineering Constants

Conversion Factors Continued

To Convert To...		Multiply...		By...
Meters	(m)	Feet	(ft)	0.3048
Meters/second	(m/s)	Feet/minute	(FPM)	0.00508
Miles/hour	(MPH)	Kilometers/hour	(km/h)	0.6215
Millimeters	(mm)	Inches	(in)	25.4
Newtons/square meter	(N/m^2)	Pounds/square inch	(psi)	6,895
Ounces	(oz)	Grams	(g)	0.035274
Pounds	(lb)	Grams	(g)	0.002205
Pounds	(lb)	Kilograms	(kg)	2.205
Pounds/cubic foot	(lb/ft^3)	Grams/cubic centimeter	(g/cm^3)	62.43
Pounds/cubic foot	(lb/ft^3)	Kilograms/cubic meter	(kg/m^3)	0.06243
Pounds/cubic inch	(lb/in^3)	Grams/cubic centimeter	(g/cm^3)	0.03613
Pounds/square inch	(psi)	Bar		14.504
Pounds/square inch	(psi)	Kilograms/square centimeter	(kg/cm^2)	14.22
Pounds/square inch	(psi)	Kilopascals	(kPa)	0.145
Pounds/square inch	(psi)	Newtons/square meter	(N/m^2)	0.000145
Square centimeters	(cm^2)	Square feet	(ft^2)	929
Square centimeters	(cm^2)	Square inches	(in^2)	6.452
Square feet	(ft^2)	Square centimeters	(cm^2)	0.001076
Square feet	(ft^2)	Square meters	(m^2)	10.76
Square inches	(in^2)	Square centimeters	(cm^2)	0.155
Square meters	(m^2)	Square feet	(ft^2)	0.0929
Torr		Inches Mercury	(in. Hg)	0.03937
Torr		Pounds/square inch	(psi)	51.71
Watts	(W)	British Thermal Units/hour	(BTU/h)	0.2931
Watts	(W)	Joules/second	(J/s)	1
Watt-hours	(WH)	British Thermal Units	(BTU)	0.2931
Watt-hours	(WH)	Joules	(J)	0.0002778
Watt-hours	(WH)	Kilojoules	(kJ)	0.2778
Watts/meter—°C	(W/m—°C)	British Thermal Units—inches / hour-square foot—°F	(BTU—in) / ($h\text{-}ft^2$—°F)	0.1442
Watts/square centimeter	(W/cm^2)	Watts/square inch	(W/in^2)	0.155
Watts/square inch	(W/in^2)	Watts/square centimeter	(W/cm^2)	6.452

Terms and Conditions

Quantity and Weights:

Products purchased and sold hereunder shall be those for which Buyer submits an Order which is accepted by Watlow. Watlow's quantities shall govern unless proved to be in error. On Orders for Products carried in stock, Watlow will deliver the ordered quantity specified. However, in the manufacture of Products it is agreed that Watlow will be allowed production losses. Watlow shall have the right to manufacture, deliver and invoice for partial deliveries of Products as stated below:

Quantity Ordered	Delivery Variation
1-4	No variation
5-24	± 1 unit
25-74	± 2 units
75-99	± 3 units
100+	± 3 percent
SERV-RITE® Insulated Wire and Cable	± 10 percent
XACTPAK® Sheathed Wire	± 10 percent

Note: Watlow will deliver exact quantities on Products with a net price of $100.00 or more. If Buyer expressly requests no variation in delivered quantity of Products with a total net price under $100.00, a ten percent (10%) surcharge will be added to the net billing on the invoice for such Order.

Delivery:

F.O.B. Watlow's Plant. Risk of loss shall pass to Buyer on delivery at the F.O.B. point. Watlow shall prepay freight, assure the shipment and select the means of transportation unless Buyer provides specific written instructions otherwise with Buyer's order. Watlow shall not be bound to tender delivery of any quantities for which Buyer has not given shipping instructions. Watlow shall be entitled to designate from time to time the locations from which Buyer may receive or pick up Products.

Payment Terms:

Terms are net 30 days upon approved credit. Prices and discounts are subject to change without notice. All quotations are valid for
30 days unless otherwise stated.

Restocking Charges:

Stock heaters, controls, sensors and accessories which have not been used or modified may be returned to the relevant Watlow Plant for a twenty percent (20%) restocking charge. For Watlow's Hannibal Plant Products only, modified-stock Products may be returned if not permanently modified, for a minimum thirty percent (30%) restocking charge. All stock and modified-stock Products require Watlow's prior authorization to be returned and must be returned within one hundred twenty (120) days from the date of delivery. Controls may not be returned if the packaging seal is broken. Non-stock (custom) heaters, controls, sensors and accessories are not returnable.

Price Revision:

Prices are subject to change without advance notice. If Watlow desires to revise the discounts, prices, points of delivery, service allowances or terms of payment but is restricted to any extent against so doing by reason of any governmental request, law, regulation, order or action, or if the discounts, prices, points of delivery, service allowances or terms of payment then in effect are altered by reason of governmental request, law, regulation, order or action, Watlow shall have the right (i) to terminate this Order by notice to Buyer, (ii) to suspend deliveries for the duration of such restriction or alteration or (iii) to have applied to this Order (as of the effective date of such restriction or alteration) any discounts, prices, points of delivery, service allowances or terms of payment governmentally acceptable. Any delivery suspended under this Section may be canceled without liability.

Return Policy:

Prior approval must be obtained from the relevant Watlow Plant to return any Product. Watlow will assign a return authorization number and record the reason for the return. Watlow will examine returned Product to determine the actual cause, if any, leading to Buyer's return. If Product has a manufacturing defect, Watlow, in its sole discretion, may issue a credit for the returned Product or repair or replace with like Product. If returned Product is not subject to Watlow's warranty, Buyer will be notified of the estimated cost of repair, if possible. Thereafter, Buyer must advise Watlow whether or not Buyer chooses to have Product repaired at Buyer's expense.

Order Changes:

Buyer must notify Watlow in writing of requested changes in the quantity, drawings, designs or specifications for Products which are ordered but not yet in the process of manufacture. After receipt of such notice, Watlow will inform Buyer of any adjustments to be made in price, delivery schedules, etc. resulting from Buyer's requested changes prior to incorporating requested changes into manufactured Products. Control Products require written notice of requested changes not less than sixty (60) days prior to last scheduled shipping date.

Freight and Taxes:

Prices do not include prepaid freight, federal, state or local taxes. Any increase in freight rates paid by Watlow on deliveries covered by this Order and hereafter becoming effective and any tax or governmental charge or increase in same (excluding any franchise or income tax or other tax or charge based on income) (i) increasing the cost to Watlow of producing, selling or delivering Products or of procuring Products used therein or, (ii) payable by Watlow because of the production, sale or delivery of Products, such as Sales Tax, Use Tax, Retailer's Occupational Tax, Gross Receipts Tax, Value Added Tax, and Ways Fees may, at Watlow's option, be added to the prices herein specified and be added to invoices.

Engineering Charge:

On complex Products, systems or control software modifications, an engineering charge shall be applied or included in the price of Prototypes. This charge is not subject to discounts.

Tooling:

All tooling and fixtures are the property of Watlow. Watlow will accept Buyer's special tooling if sent freight prepaid. Watlow will maintain this tooling, exercising reasonable care, in order to produce Buyer's Products. Permanent molds for cast-in Products shall be the property and responsibility of Buyer.

Cancellation Charges:

There will be no cancellation charge for non-modified stock Products. Non-stock and modified-stock Products may be subject to a cancellation charge to be determined by Watlow depending upon the portion of Product completed at the time of such cancellation.

Terms and Conditions

Excuse of Performance:

(A) Deliveries may be suspended by either party in the event of: Act of God, war, riot, fire, explosion, accident, flood, sabotage; lack of adequate fuel, power, raw materials, labor, containers or transportation facilities; compliance with Governmental Requirements (as hereinafter defined); breakage or failure of machinery or apparatus; national defense requirements or any other event, whether or not of the class or kind enumerated herein, beyond the reasonable control of such party; or in the event of labor trouble, strike, lockout or injunction (provided that neither party shall be required to settle a labor dispute against its own best judgment); which event makes impracticable the manufacture, transportation, sale, purchase, acceptance, use or resale of Products or a material upon which the manufacture of Products is dependent.

(B) If Watlow determines that its ability to supply the total demand for Products, or obtain any or a sufficient quantity of any material used directly or indirectly in the manufacture of Products, is hindered, limited or made impracticable, Watlow may allocate its available supply of Products or such material (without obligation to acquire other supplies of any such Products or material) among itself and its purchasers on such basis as Watlow determines to be equitable without liability for any failure of performance which may result therefrom.

(C) Deliveries suspended or not made by reason of this Section shall be canceled without liability, but this agreement and/or Order shall otherwise remain unaffected.

Prototypes:

If Buyer orders and/or Watlow delivers a Product designated as a "Prototype", no guarantees, warranties or representations as to fitness for a particular purpose or merchantability are made with respect to such Prototype. Buyer shall have the duty and sole responsibility to test a Prototype prior to acceptance and/or incorporation into end-use applications. Further, a production Product based on a Prototype design may differ in assembly methods and materials from the Prototype. Buyer, therefore, shall have the duty and sole responsibility for testing and acceptance of production Products which are based on Prototype designs.

Warranty and Limitation of Liability:

Watlow warrants its Products against defects in material and workmanship for at least one (1) year (three (3) years on some controls) from the date of delivery, provided such Product is properly applied, used and maintained. Refer to the express written warranty time period for each individual Product or contact the relevant Watlow plant for such warranty time period information. Watlow does not warrant any Product against damage from corrosion, contamination, misapplication, improper specification or wear and tear and operational conditions beyond Watlow's control. The terms of this Warranty are the exclusive terms available to Buyer and to any other person or entity to whom Products are transferred during the period of this Warranty. No person has authority to bind Watlow to a representation or warranty other than this express Warranty. Watlow shall not be liable for incidental or consequential damages resulting from the use of Products whether a claim for such damages is based upon warranty, contract, negligence or other cause of action. Should any Product fail while subject to this Warranty, such Product shall be repaired or replaced, at Watlow's option, at no charge to Buyer or to any other person or entity to whom Product is transferred during the period of this Warranty. Watlow must be notified of the alleged failure of Product within thirty (30) days of such event and advanced authorization for repair or replacement must be obtained in writing from Watlow. **THIS WARRANTY IS MADE EXPRESSLY IN LIEU OF ALL OTHER WARRANTIES, EXPRESS OR IMPLIED, INCLUDING WITHOUT LIMITATION, ANY WARRANTY ARISING FROM A COURSE OF DEALING OR USAGE OF TRADE, AND ALL OTHER SUCH WARRANTIES ARE SPECIFICALLY EXCLUDED. THE CORRECTION OF ANY DEFECT IN OR FAILURE OF PRODUCTS BY REPAIR OR REPLACEMENT TO THE EXTENT SET FORTH ABOVE, SHALL BE WATLOW'S LIMIT OF LIABILITY AND THE EXCLUSIVE REMEDY FOR ANY AND ALL LOSSES, DELAYS OR DAMAGES RESULTING FROM THE PURCHASE OR USE OF THE PRODUCTS. IN NO EVENT SHALL WATLOW BE LIABLE FOR SPECIAL, INDIRECT, INCIDENTAL OR CONSEQUENTIAL DAMAGES. WATLOW SHALL NOT BE LIABLE FOR, AND BUYER AND ANY OTHER PERSON OR ENTITY TO WHOM PRODUCTS ARE TRANSFERRED DURING THE PERIOD OF THIS WARRANTY ASSUMES RESPONSIBILITY FOR, ALL PERSONAL INJURY AND PROPERTY DAMAGE RESULTING FROM OR RELATED TO THE HANDLING, POSSESSION OR USE OF PRODUCTS AND PRODUCTS MANUFACTURED AND SOLD BY WATLOW HEREUNDER.**

Miscellaneous:

THE VALIDITY, INTERPRETATION AND PERFORMANCE OF THIS AGREEMENT AND/OR ORDER AND ANY DISPUTE CONNECTED HEREWITH SHALL BE GOVERNED AND CONSTRUED IN ACCORDANCE WITH THE LAWS OF THE STATE OF MISSOURI. These Terms and Conditions constitute the full understanding of the parties, a complete allocation of risks between them and a complete and exclusive statement of the terms and conditions of their agreement and/or Order relating to the subject matter herein. Except as otherwise expressly provided herein, no conditions, usage of trade, course of dealing or performance, understanding or agreement and/or Order purporting to modify, vary, explain or supplement the terms or conditions of this agreement and/or Order shall be binding unless hereafter made in writing and signed by the party to be bound, and no modification shall be effected by the acknowledgment or acceptance of any purchase order or shipping instruction forms containing terms or conditions at variance with or in addition to those set forth herein. No waiver by either party with respect to any breach or default or of any right or remedy and no course of dealing or performance shall be deemed to constitute a continuing waiver of any other breach or default or of any other right or remedy, unless such waiver be expressed in writing signed by the party to be bound. If any term, condition or provision of this agreement and/or Order or the application thereof is judicially or otherwise determined to be invalid or unenforceable, or if the parties mutually agree in writing to any revision of this agreement and/or Order, the remainder of this agreement and/or Order and the application thereof shall not be affected, and this agreement and/or Order shall otherwise remain in full force and effect.

Code Number Index

How To Use This Index

This easy cross reference contains the *alpha* or *numeric* prefixes for all Watlow product code numbers contained in this catalog.

The spaces (_) shown in some of the following prefixes indicate additional characters.

Note: some code numbers include a suffix alpha character. This is the *last* alpha character that appears in the product code number.

Code Number	Description	Page Number
008_C_	Gas Line–¼" tubing	184
010_C_	Silicone/Wire-Wound	172
012_C_	Gas Line–⅜" tubing	184
016_C_	Gas Line–½" tubing	184
017027_	Gas Line	185
020_C_	Silicone/Wire-Wound	172
024_C_	Gas Line–¾" tubing	185
02401580	Gas Line	185
02655_	Silicone/Drum	180
026677_	Silicone/Drum	180
03_	Gas Line	186
030_C_	Silicone/Wire-Wound	173
0390158_	Gas Line	185
040_C_	Silicone/Wire-Wound	173
040315_	Silicone/Drum	180
040677_	Silicone/Drum	180
0470_	Gas Line	186
050_C_	Silicone/Wire-Wound	173
05712082	Silicone/Conduit	181
060_C_	Silicone/Wire-Wound	173
1 thru 12	Thermostats	425
102PS_	Cable Nozzle–0.102" Square	66
125CH_	Straight Cable–0.125" Round	63
125H_	Straight Cable–0.125" Round	64
125PS_	Straight Cable–0.132" Square	64
125X3SA	Screw Plug to Flane Adaptor	326
148_	Heat Transfer Cement	297
14825081	Silicone/Conduit	181
62H_	Straight Cable–0.062" Round	63
94PC_	Cable Nozzle–0.094" Round	66
94PC_	Straight Cable–0.094" Round	63
B-200	Thermostat	168
B-200_	Thermostat	167
BCC_	1" Screw Plug	327
BCS_	1" Screw Plug	327
BDC_	1¼" Screw Plug	328
BDNF_	1¼" Screw Plug	328-329
BEC_	1¼" Screw Plug	328
BEN_	1¼" Screw Plug	328
BES_	1¼" Screw Plug	328
BGC_	2" Screw Plug	330
BGN_	2" Screw Plug	330
BGS_	2" Screw Plug	331
BHC_	2" Screw Plug	330
BHNA_	2" Screw Plug	331
BHN_	2" Screw Plug	330-331
BHNB_	2" Screw Plug With Control Box	338
BHS_	2" Screw Plug	331
BKR_	K-RING	72
BLC_	2½" Screw Plug	332
BLNA_	2½" Screw Plug	333
BLNF_	2½" Screw Plug	334-335
BLN_	2½" Screw Plug	332-333
BLR_	2½" Screw Plug	332
BLS_	2½" Screw Plug	333
B_	Mica Band	33-39
B_①	THINBAND®	40-46
CBDNF_	1¼" NPT Circulation	373-374
CBEC_	1¼" NPT Circulation	372
CBEC_	Circulation Booster	395
CBEN_	1¼" NPT Circulation	372
CBES_	1¼" NPT Circulation	372
CBES_	Circulation Booster	395
CBLC_	2½" NPT Circulation	375

① Former mica band code numbers superceded by THINBAND code numbers STB_.

Code Number Index

Code Number	Description	Page Number
CBLNA_	2½" NPT Circulation	375
CBLNF_	2½" NPT Circulation	376
CBLN_	2½" NPT Circulation	375
CBLR_	2½" NPT Circulation	375
CBLS_	2½" NPT Circulation	375
CC405_	Ceramic Insulating Tube	151
CFBLKT_	Ceramic Fiber Insulation Blanket	152
CFMC_	3" Flange Circulation	377
CFMNA_	3" Flange Circulation	377
CFMN_	3" Flange Circulation	377-378
CFMS_	3" Flange Circulation	378
CFNC_	5" Flange Circulation	382
CFNNA_	5" Flange Circulation	383
CFNN_	5" Flange Circulation	382-383
CFNS_	5" Flange Circulation	383
CFOC_	4" Flange Circulation	379
CFONA_	4" Flange Circulation	380
CFONF_	4" Flange Circulation	381
CFON_	4" Flange Circulation	379-380
CFOR_	4" Flange Circulation	379
CFOS_	4" Flange Circulation	380
CFPC_	6" Flange Circulation	384
CFPNA_	6" Flange Circulation	385
CFPNF_	6" Flange Circulation	387
CFPN_	6" Flange Circulation	385-386
CFPR_	6" Flange Circulation	384
CFPS_	6" Flange Circulation	386
CFRC_	8" Flange Circulation	388
CFRNA_	8" Flange Circulation	388
CFRN_	8" Flange Circulation	388-389
CFRS_	8" Flange Circulation	389
CFSNA_	10" Flange Circulation	390
CFSN_	10" Flange Circulation	390
CFSS_	10" Flange Circulation	390
CFTNA_	12" Flange Circulation	391
CFTN_	12" Flange Circulation	391
CFTS_	12" Flange Circulation	391
CFWNA_	14" Flange Circulation	392
CFWN_	14" Flange Circulation	392
CFWS_	14" Flange Circulation	392
CH_	STARFLOW Circulation	70
CP_	Engine Preheater	397-398
CS45_	Porcelain Bushing	152
C_	FIREROD®	97
D_	Duct Heater or Duct Element	416-417
EN_	Enclosure Heater	296
E_	FIREROD	97
F010_C_	Silicone/Etched Foil	175
F020_C_	Silicone/Etched Foil	175
F030_C_	Silicone/Etched Foil	175
F040_C_	Silicone/Etched Foil	175
F050_C_	Silicone/Etched Foil	175
F060_C_	Silicone/Etched Foil	175
FAN_	⅝" FIREBAR® Element	315
FBN_	FIREBAR Element	313-314
FENF_	3⅛" Square Flange	365
FGNF_	4½" Square Flange	366
FHNF_	2½" Square Flange	365
FHN_	2½" Square Flange	364
FKC_	2" Flange	345
FKN_	2" Flange	345
FKS_	2" Flange	345
FLN_	2½" Flange	346

Code Number Index

Code Number	Description	Page Number
FMC_	3" Flange	347
FMNA_	3" Flange	347
FMN_	3" Flange	347-348
FMS_	3" Flange	347-348
FNC_	5" Flange	351
FNNA_	5" Flange	351-352
FNN_	5" Flange	351-352
FNS_	5" Flange	352-353
FOC_	4" Flange	348
FONA_	4" Flange	349
FONF_	4" Flange	350
FON_	4" Flange	349
FOR_	4" Flange	348
FOS_	4" Flange	349
FPC_	6" Flange	353
FPNA_	6" Flange	354
FPNF_	6" Flange	356
FPN_	6" Flange	354-355
FPR_	6" Flange	353-354
FPS_	6" Flange	355
FRC_	8" Flange	357
FRNA_	8" Flange	357
FRN_	8" Flange	357-358
FRS_	8" Flange	358
FSA_	S-E ⅝" FIREBAR Element	317
FSNA_	10" Flange	359
FSN_	10" Flange	359
FSP_	S-E FIREBAR Element	316
FSP_F	FINBAR	320
FSS_	10" Flange	359
FTNA_	12" Flange	360
FTN_	12" Flange	360
FTS_	12" Flange	360
FWNA_	14" Flange	361
FWN_	14" Flange	361
FWS_	14" Flange	361
G_	FIREROD	98-101
G_X_	FIREROD With Thermocouple	108
H_X_	FIREROD Bolt	116
J_	FIREROD	101-104
J_X_	FIREROD Bolt	116
J_X_	FIREROD With Thermocouple	108
K05_	Flexible Kit/Kapton®	190
K0_	Flexible/Kapton®	190
K492_	Thermostat Kit	423
KEB_A	Metric EB Cartridge	132-134
K_X_	FIREROD Bolt	116
L_	FIREROD	104-106
L_S	Flexible/Composite	182
L_X_	FIREROD Bolt	116
L_X_	FIREROD Immersion	113-114
M_	Modular Duct	421-422
MB_	MI Band	21-22
ME_	MI Band	22
MS1J_A_	MI Strip	231
M_X_	FIREROD Bolt	116
N_	FIREROD	106-107
N_X_	FIREROD Bolt	116
OLDN_	Over-the-Side Drum	410
OL_	Over-the-Side “L” Shaped	404

Code Number Index

Code Number	Description	Page Number
OR_	Over-the-Side “O” Shaped	404
P0624AX50	RAYMAX® 1120	210
P1212AX30	RAYMAX 1120	210
P1224AX62	RAYMAX 1120	210
P1248AX73	RAYMAX 1120	210
P_X_	FIREROD Bolt	116
PWS	Protective Wells	426
RAN_	WATROD Element	291
RBC_	WATROD Element	294
RBN_	WATROD Element	291
RBR_	WATROD Element	293
RBS_	WATROD Element	290
RCN_	WATROD Element	290 & 292
RDN_	Radiant Replacement Element	219-222
RDN_	RAYMAX 1525® Element	219-220
RDN_	WATROD Element	292-293
RG1_00	RAYMAX 1525	220
RGC_	WATROD Element	294
RGNA_	WATROD Element	290
RGN_	WATROD Element	290 & 293
RGR_	WATROD Element	293
RGSS_	WATROD Element	290
RGS_	WATROD Element	291
RQB_	RAYMAX 1525 Element	220
RR_00	RAYMAX 1525 Replacement Reflector	219-220
RS1_00	RAYMAX 1525	220
RSN_	S-E WATROD Element	295
RT1_00	RAYMAX 1525	219
RT2_00	RAYMAX 1525	219
RU1_00	RAYMAX 1525	219
S1A_	Mica Strip	240
S1J_	Mica Strip	240
S2J_	Mica Strip	240
SGA1J_A_	375 Strip	245
SGA1J_E_	375 Strip	245
SGA1J_J_	375 Strip	245-246
SGA1J_N_	375 Strip	246
SGA1J_P_	375 Strip	245
SGA1J_R_	375 Strip	245-246
SGA1J_T_	375 Strip	245-246
SGA1J_W_	375 Finned Strip	250-252
SGA1J_Y_	375 Finned Strip	250
SMB	Sealed MI Nozzle	21
ST-10	Thermostat	168
ST-207	Thermostat	168
ST-207E	Thermostat	168
STB_	THINBAND®	40-46
T-10	Thermostat	167
T-207	Thermostat	167
T_X_	FIREROD Bolt	116
VC_	Ceramic Fiber Heater	154
VF_S	Ceramic Fiber Heater	155
VF_T	Ceramic Fiber Heater	158
VL_	Over-the-Side Vertical Loop	407
VP5_A_F	RAYMAX 1220	213
VP5_T	RAYMAX 2030	213-214
VS_S	Ceramic Fiber Heater	156-157
VS_T	Ceramic Fiber Heater	159-160
Z5_	Gas Line Accessories	186
Z596_	Cable Nozzle	68
Z6_	Gas Line Accessories	186

Watlow

Innovative Solutions For Every Application

Watlow supplies the thermal systems that help solve your demanding application needs. We design and manufacture reliable thermal system components to work together. As your single-source supplier you can count on yielding the following advantages every time you use Watlow products:

- Longer life
- More precise control
- Faster response time
- Higher productivity
- Limitless ways of managing processes

Watlow is creating innovative solutions to all of your thermal system's needs by expanding our heater line to meet temperature requirements to 2300°F (1260°C), while our temperature sensor line manages applications ranging from -328°F (-200°C) to 4200°F (2315°C). Watlow's temperature controllers range from simple on-off, non-indicating devices to the technologically advanced microprocessor-based ramping controllers and multi-loop controllers. Our power controllers range from simple MDRs to the more complex SCRs.

Our 78 years of experience is reflected in our design of over one million different heaters, sensors, controllers, software and system packages.

Watlow products are demanded in a variety of markets including: semiconductor, plastics processing, foodservice equipment, packaging, medical equipment, aerospace, scientific equipment and nuclear power generation.

Whatever your application, however complex, just call us. We'll provide you with the best thermal solution.

Tradenames and Trademarks

The following tradename are registered to Watlow Electric Manufacturing Company and its subsidiaries:

Watlow®

The following logo is registered to Watlow Electric Manufacturing Company and its subsidiaries:

The following registered and non-registered trademarks belong to Watlow Electric Manufacturing Company and its subsidiaries:

ANASOFT® PC software

ANAWIN® PC software

CONTROL CONFIDENCE®

DIN-A-MITE® power controllers

E-SAFE™ mercury-free relay

FIREBAR® flat tubular heating elements

FIREROD® cartridge heaters

K-RING® nozzle heaters

LOGICPRO™ integrated software component

MICRODIN™ temperature controllers

MINICHEF® temperature controllers

MINI K-RING® nozzle heaters

MODULE-MOUNT® ceramic fiber furnace system

ON-LINE KITCHEN™ capabilities

RAYMAX® radiant heaters

SERV-RITE® thermocouple wire and cable

THERMO-DUCER® infrared temperature sensors

THINBAND® band heaters

THINCAST® cast-in heaters

WATTS CURRENT™ newsletter

WATLOW.COM™ web site

WATVIEW™ PC software

XACTEMP® hand-held temperature probes

XACTPAK® mineral insulated, metal-sheathed cable

The following trademarks are used by Watlow Electric Manufacturing Company and its subsidiaries:

CARBONSOFT carbon potential software

FREEFLEX heated tubing

LA lead adapter system

MICROCOIL miniature thermocouple

POWER SERIES power controllers

QUICK CLAMP option for THINBAND heaters

TEMPSWITCH thermostats

WATCURVE food application software

WATLUBE cartridge heater release agent

WATROD round tubular heating elements

WATLOW

WATLOW

Designer and Manufacturer of
Industrial Heaters, Sensors and Controls

12001 Lackland Road • St. Louis, Missouri 63146 USA • Phone: 314-878-4600 • FAX: 314-878-6814 • www.watlow.com

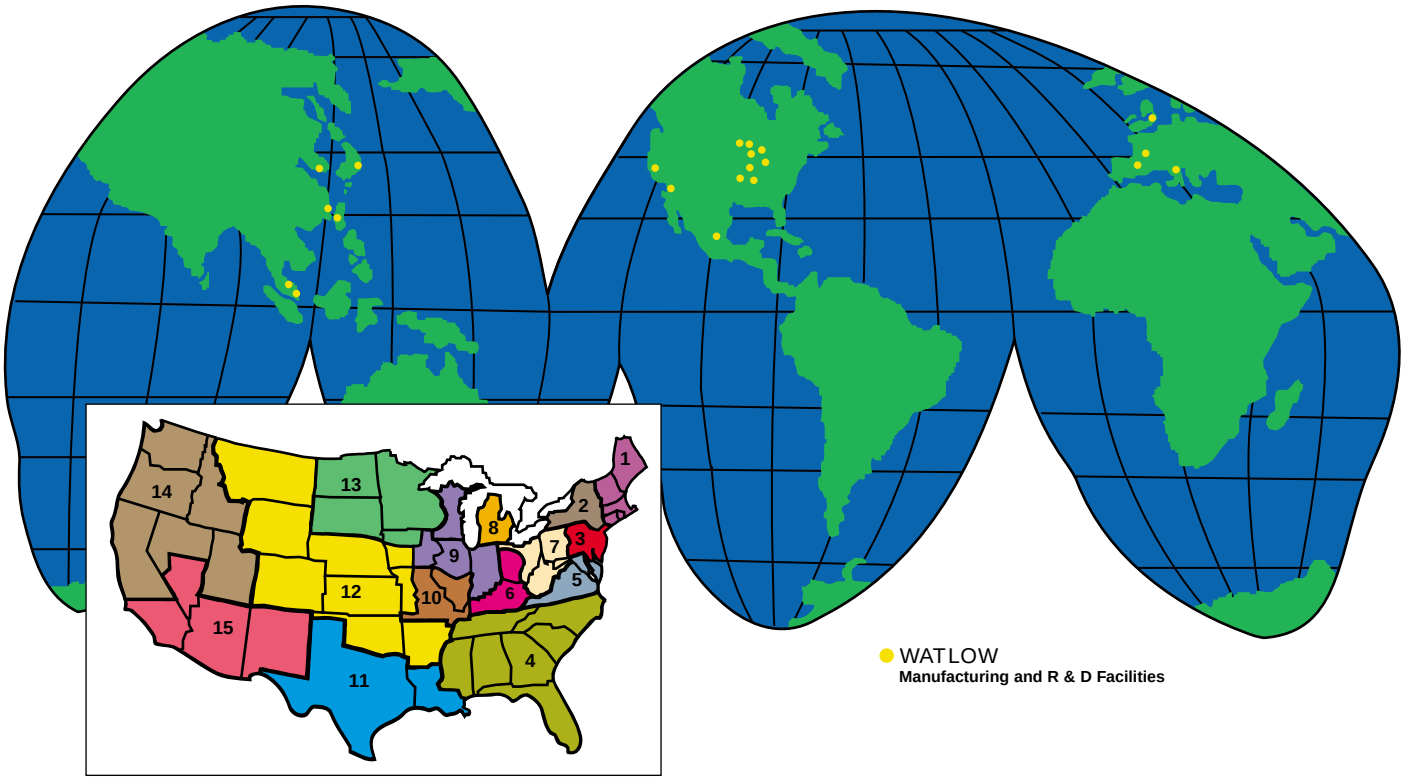

Watlow Products and Technical Support Delivered Worldwide

North American Sales Offices

Region 1	
New England	603-882-1330
Region 2	
New York, Upstate	716-438-0454
Region 3	
New York, New Jersey, Philadelphia	215-345-8130
Region 4	
Atlanta/Greenville	770-972-4948
Charlotte/Columbia	704-541-3896
Nashville	615-264-6148
Orlando	407-351-0737
Tampa/St. Petersburg	813-926-3600
Winston Salem/Raleigh	336-766-9659
Region 5	
Maryland/Virginia	215-345-8130
Region 6	
Cincinnati	513-398-5500
Region 7	
Cleveland	330-467-1423
Pittsburgh	412-322-5004
Region 8	
Detroit	248-651-0500
Region 9	
Chicago	847-458-1500
Indianapolis	317-575-8932
Wisconsin	920-993-2161
Region 10	
St. Louis	636-441-5077
Region 11	
Austin	512-249-1900
Dallas	972-620-6030
Houston	281-440-3074
Shreveport	318-864-2864
Region 12	
Denver	303-798-7778
Kansas City	913-897-3973
Tulsa	918-496-2826
Region 13	
Minneapolis	952-431-5700
Region 14	
Portland	503-245-9037
Sacramento	707-425-1155
San Francisco	408-980-9355
Seattle	425-222-4090
Region 15	
Los Angeles	714-935-2999
Phoenix	602-708-1995
San Diego	714-935-2999

Asian Sales Offices

Australia	+61 (3) 9335-6449
China	+86 (21) 6229-8917
Japan	+81 (03) 5403-4688
Korea	+82 (02) 563-5777
Singapore	+65 777-5488
Taiwan	+886 (0) 7-261-8397

European Sales Offices

France	+33 (01) 3073-2425
Germany	+49 (0) 7253-9400-0
Italy	+39 (02) 458-8841
United Kingdom	+44 (0) 115-964-0777

Latin American Sales Office

Mexico	+52 (42) 17-6235

Watlow maintains a worldwide network of stocking distributors.

Your Authorized Watlow Distributor is:

Printed in the USA on Recycled Paper, 15% Postconsumer Waste.

COR-HPC-110